Thank You for downloading this manual. I hope it helps you resolve any issues you have had with your game.

This manual was purchased, and scanned by Basement Arcade Associates, www.basementarcade.com and is offered for FREE download at our site.

This PDF is NOT to be distributed on any collection CD / DVD, nor is to be linked to via any other internet site without permission from us. Likewise it is not to be distributed from any other site without our permission.

Abiding by these requests, will insure the continuing support of new manuals added to our site.

All original copyrights held by their original owners, This PDF copyrighted Basement Arcade Associates.

-=Mark=-

www.basementarcade.com

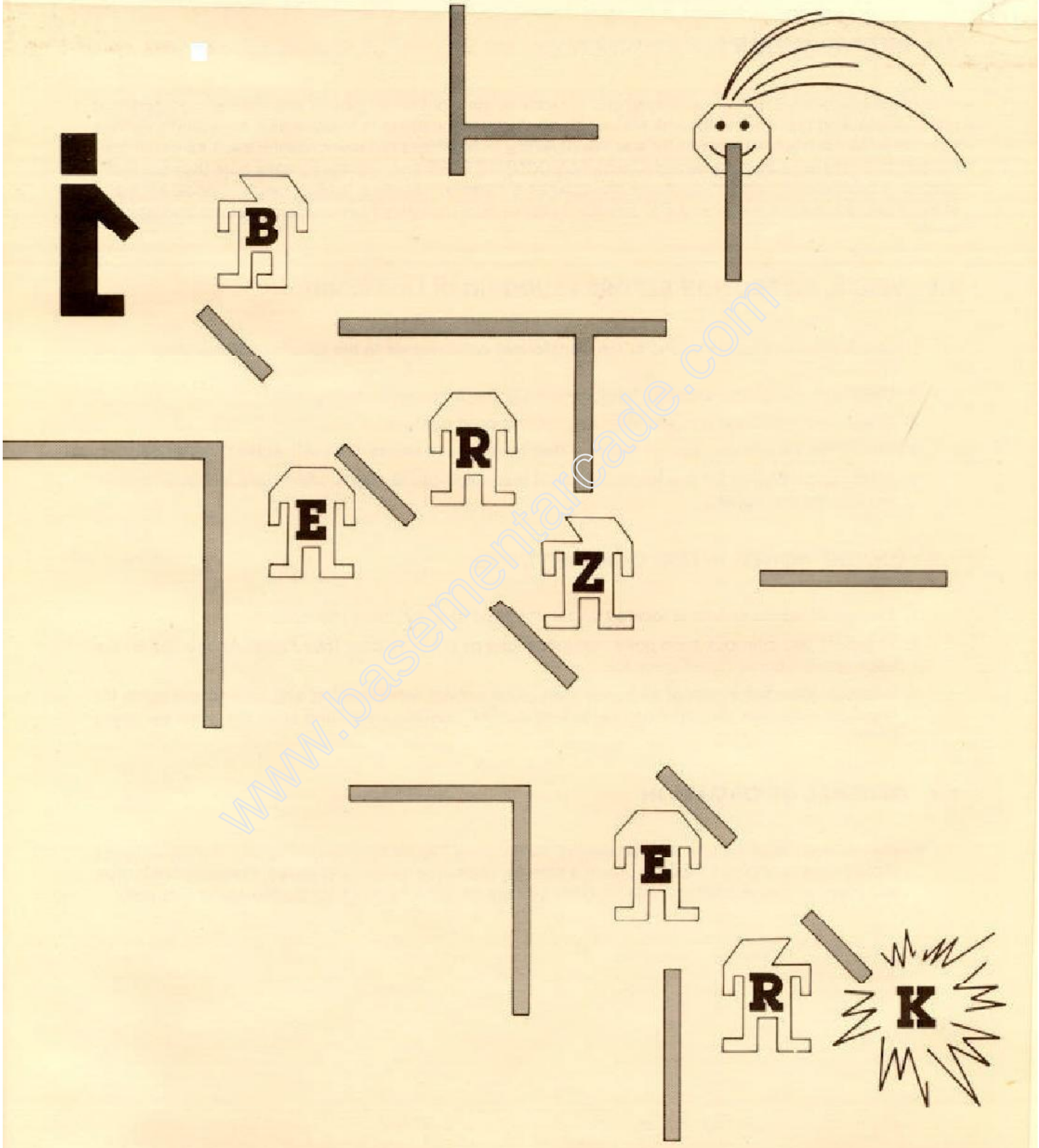

www.basementarcade.com

STERN® ELECTRONICS, INC.
1725 Diversey Parkway, Chicago, Illinois 60614
(312) 935-4600, Telex 25-4657
Toll Free Service Assistance (800) 621-6424

BASEMENT ARCADE CLASSICS
www.basementarcade.com

1.1 INTRODUCTION

This game has been STERN final tested and is ready to play, but on all games there are some items that must be checked first after shipment. Making these visual inspections may avoid time consuming service work later. Minor troubles caused by abusive handling in shipment are unavoidable, such as cable connectors that may have been loosened. Check ALL CONNECTORS on the game to make sure they are firmly seated. Examine the exterior of the game cabinet for dents, chips or broken parts. Check all major subassemblies, control panel and T.V. monitor to make sure that they have not loosened up during shipment.

1.2 VISUAL INSPECTION BEFORE PLUGGING IN LINE CORD

1. Check that the primary wiring of the transformer corresponds to the location voltage (See Figure E).
2. Check the transformer for any foreign material shorting across wiring lugs.
3. Check that fuses are firmly seated and making good contact.
4. Check the T.V. for any foreign material that could cause shorts (VISUAL INSPECTION ONLY).
5. Check game boards for any foreign material that could cause shorts. Make sure all circuit boards are connected properly.

1.3 ON/OFF POWER INTERLOCK SWITCHES

1. The on/off power switch is located on the top right side 12" from the front.
2. There are two interlock main power switches, one by the front door (See Figure A) and one on the back access panel (See Figure B).
3. Interlock switches interrupt all power from game except service outlet and flourescent lights for Marquee. Interlock switches can be locked in "ON" position by pulling stem out when servicing game.

1.4 GENERAL INFORMATION

1. On the front door there is a bookkeeping switch (See Figure A). Depressing this switch will step through bookkeeping functions one at a time for each time switch is pressed. Pressing fire button will clear whatever bookkeeping function you are in. (See Page 14 for bookkeeping function).

www.basementarcade.com

2. There are two coin chutes on the front door. They can be adjusted to work separately. (See Page 13).
3. Game adjustment switches are located on ZPU board. (See Pages 10, 12 & 13 for adjustments and location).
4. Volume control for electronic sound is located inside the front door on right side. (See Figure B).
5. Power supply has an adjustment for the +5 VDC regulator, this MUST BE SET BETWEEN +5.0 VDC and +5.25 VDC as measured at TP4, VSU-1000. (See Figure D for test points on power supply and adjustment pot).

www.basementarcade.com

FIGURE - A

BERZERK

FRONT CABINET

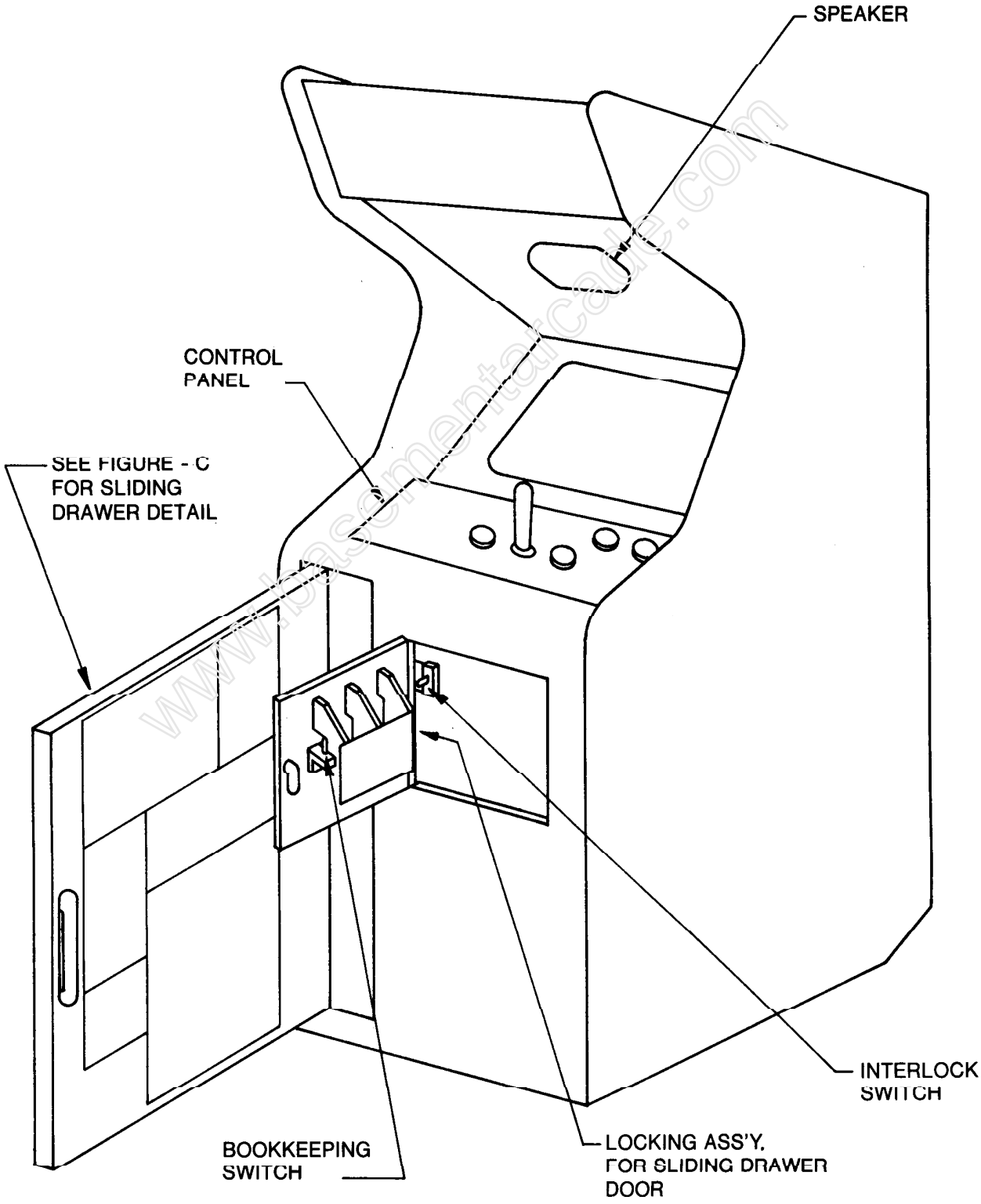

www.basementarcade.com

FIGURE - B

BERZERK

REAR CABINET

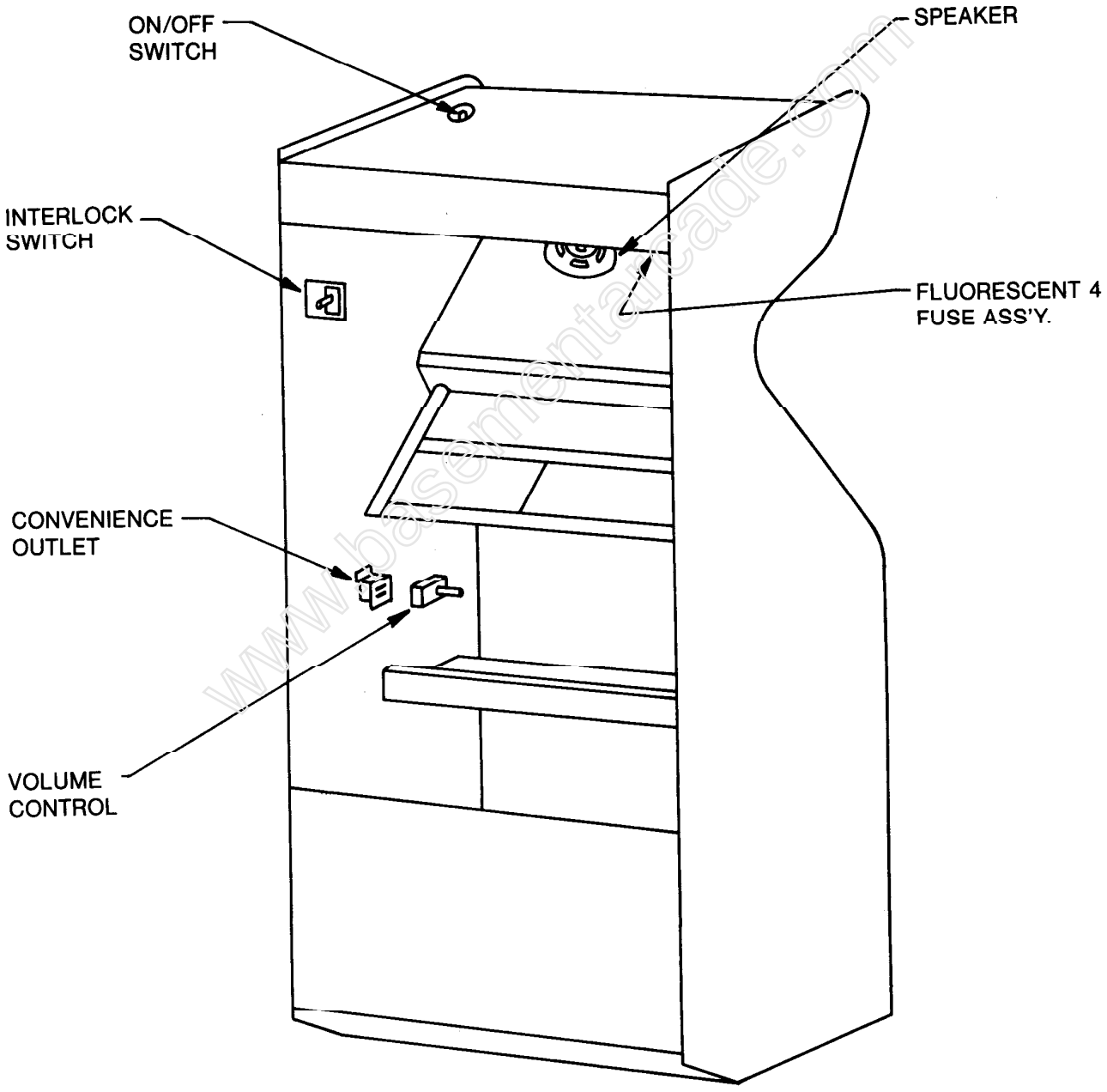

www.basementarcade.com

FIGURE - C

SLIDING DRAWER

ADJUSTMENTS & FUSES

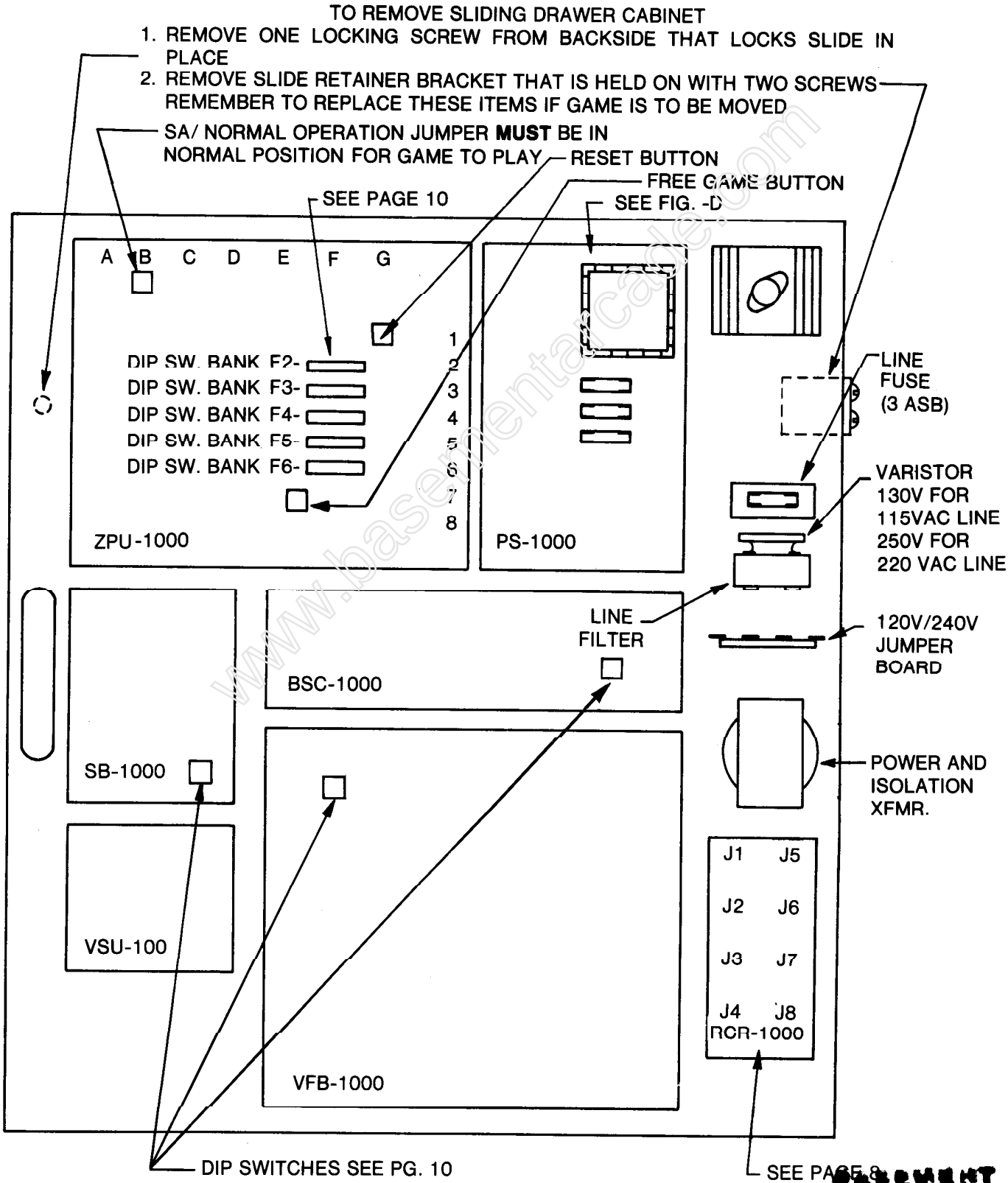

www.basementarcade.com

BASEMENT ARCADE CLASSICS
www.basementarcade.com

FIGURE D

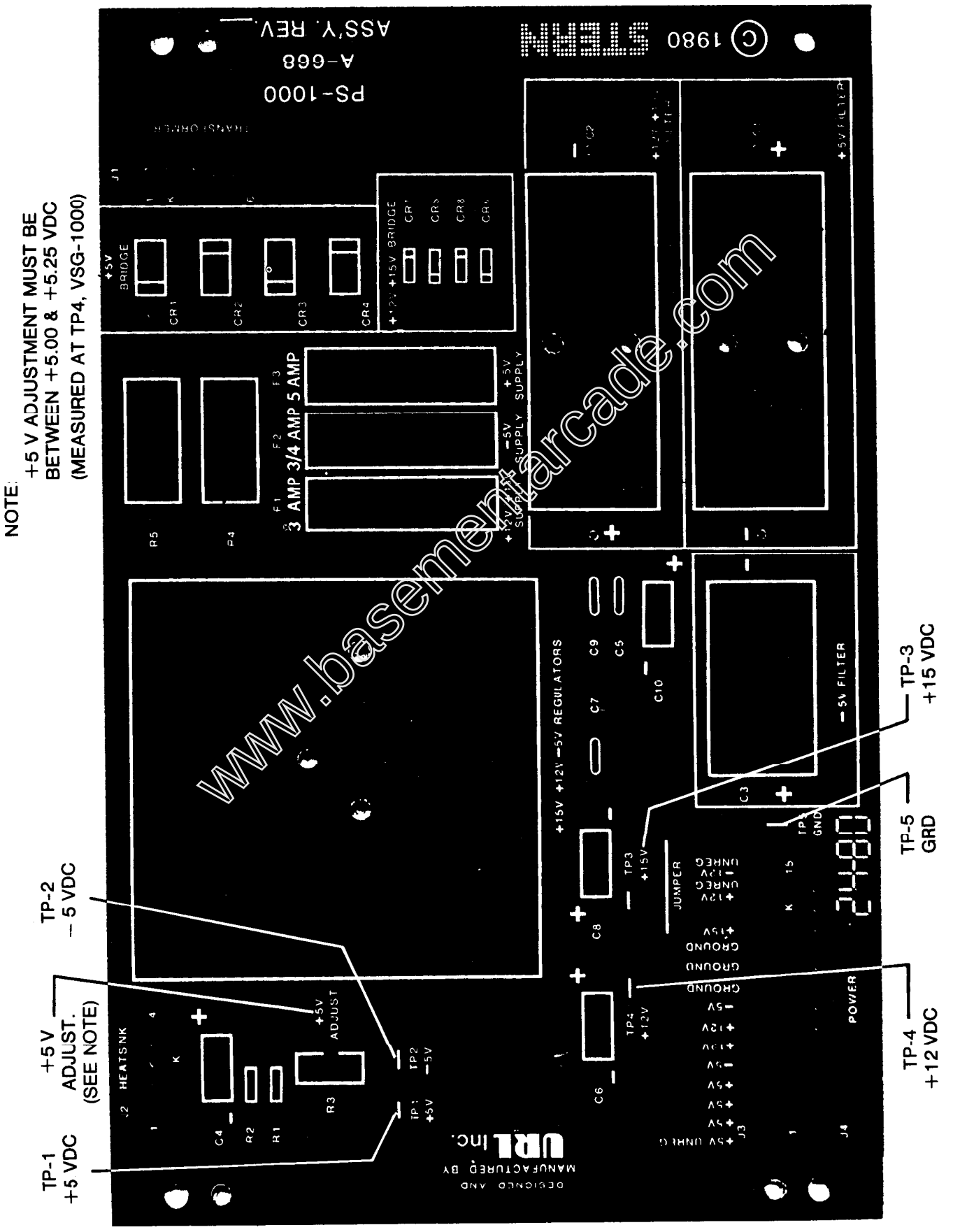

www.basementarcade.com

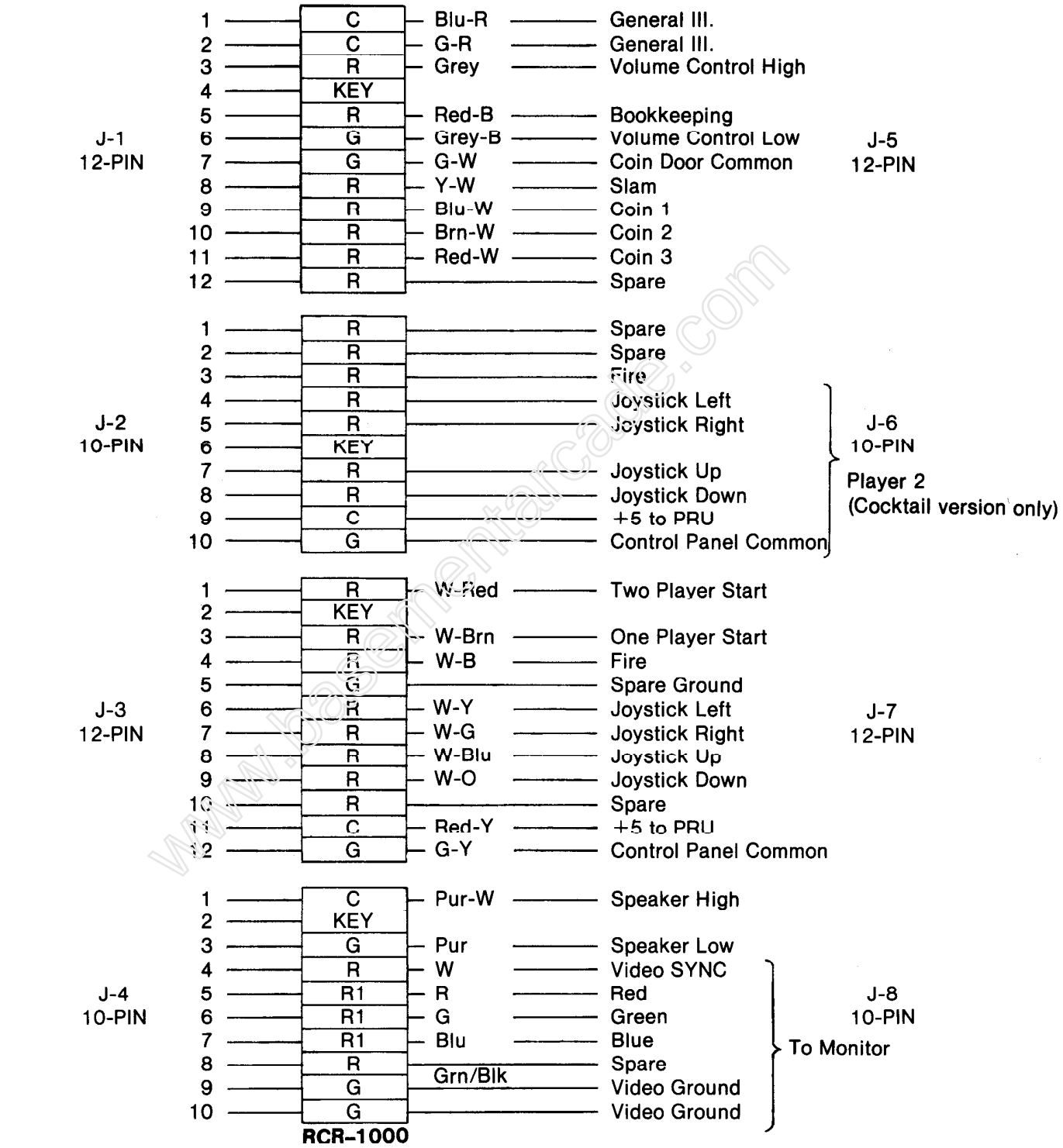

www.basementarcade.com

OPERATION

Insert coin for credit. Start game by pressing START button. Object of game is to have Humanoid Intruder shoot as many Robots as possible and escape from room. Humanoid Intruder is controlled by player with control stick. (Eight directions possible). Note: Humanoid Intruder stops moving when shot is fired. Shot is fired in direction Control Stick points to. Bonus Score for each room full of destroyed Robots (even if Robots destroy each other). EVIL OTTO comes out from position Humanoid Intruder started, cannot be destroyed will go thru walls, and follows Humanoid Intruder with its object to destroy the Humanoid Intruder.

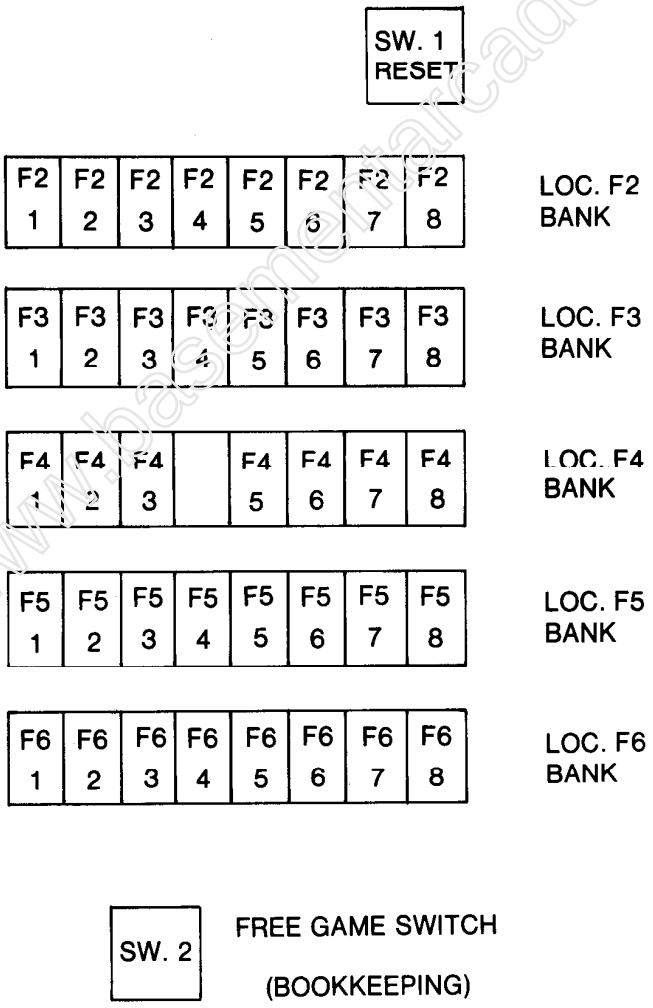

www.basementarcade.com

BASEMENT ARCADE CLASSICS
www.basementarcade.com

ADDITIONAL SWITCHES

ELECTRONIC BOARDS	SWITCH NO.	PINS	USAGE
BSC	1	1-8	Breaks $\overline{\text{WAIT}}$ line for SIGNATURE ANALYSIS (S.A) MUST BE Closed for game operation
	2	2-7	Adjusts color outputs for the variations in monitor input circuitry
	3	3-6	
	4	4-5	SHOULD BE: OPEN FOR WELLS-GARDNER CLOSED FOR ELECTROHOME
VFB 100	1	1-8	NOT USED
	2	2-7	Breaks $\overline{\text{NMI}}$ line for S.A. MUST BE Closed for game operation
	3	3-6	Breaks $\overline{\text{INT}}$ line for S.A. MUST BE Closed for game operation
	4	4-5	Breaks $\overline{\text{WAIT}}$ line for S.A. MUST BE Closed for game operation
SB 1000	1	1-8	Breaks $\overline{\text{WAIT}}$ line for S.A.
	2	2-7	NOT USED
	3	3-6	NOT USED
	4	4-5	NOT USED

JUMPER OPTIONS

SB 1000: JUMPER W1 MUST BE CONNECTED (W2 OPEN)

VSU 1000: JUMPER W3 MUST BE CONNECTED (W4 OPEN)

ZPU 1000: J8 PINS 2-3 MUST BE CONNECTED TOGETHER

CHIP LOCATION 1E MAY BE POPULATED BY ANY ONE OF 3 DIFFERENT CHIPS

CHIP	STERN PART NO.	CONNECT JUMPER
6513 H	56A-6-S004	W5
6513 L	56A-6-S003	W6
6514	56A-6-S002	W11

www.basementarcade.com

FREE GAME SWITCH (SW. #2)

Switch #2 (printed on board "Bookkeeping Clear"), if pressed when HIGH SCORE TO DATE IS DISPLAYED will provide one game without being added on any coin bookkeeping.

MONITOR DIP SWITCH AND GAME SWITCH DISPLAY TEST

Set dip switch 9 on the ZPU board (location F3, See fig. D) to "ON" position, then press the RESET button (SW. #1, located at F1 on the ZPU board).

The monitor will display the OFF (0 on the monitor) ON (□ on the monitor) status of the 40 "ZPU DIP SWITCHES" on the upper chart and the open (0 on the monitor), closed (□ on the monitor) status on all game switches on the lower "VFB SWITCHES" chart.

SEE BELOW FOR ZPU AND VFB SWITCH ASSIGNMENTS. (SEE PAGE 13 FOR DIP SW. DESCRIPTION)

(NOTE: GAME SWITCHES CAN BE TESTED BY CLOSING AND SEEING IF CLOSED DISPLAY SHOWS UP ON MONITOR CHART).

To return to normal operation set dip switch 9 to OFF position and press RESET (SW. #1) button on the ZPU board.

NOTE: The usage of these switches will be explained in the Stern Video System 1000 Signature Analysis Manual.

ZPU DIP SWITCH STATUS

1 Normally OFF (On for SA. Tests)	2 Normally OFF (On for SA. Tests)	3 *	4 *	5 *	6 *	7 ON for Extra Man at 5,000	8 ON for Extra Man at 10,000	BANK F2
9 ON for This Display + Reset	10 ON see Note for Crosshatch	11 *	12 *	13 *	14 *	15 Coin Instruct. Translation	16 Coin Instruct. Translation	BANK F3
17 18 19 20 —COIN CHUTE #1— CREDIT/COIN SET-UP REFER TO SETTING TABLE				21 *	22 *	23 *	24 *	BANK F4
25 26 27 28 —COIN CHUTE #2— CREDIT/COIN SET-UP REFER TO SETTING TABLE				29 *	30 *	31 *	32 *	BANK F5
33 34 35 36 —COIN CHUTE #3— CREDIT/COIN SET-UP REFER TO SETTING TABLE				37 *	38 *	39 *	40 *	BANK F6

VFB SWITCHES (SHOWS SETTINGS)

VFB SWITCH STATUS

ON WHEN JOYSTICK AT LEFT	ON WHEN JOYSTICK AT RIGHT	ON WHEN JOYSTICK UP	ON WHEN JOYSTICK DOWN	ON WHEN FIRE PRESSED	*	*	*
ON WHEN START 1 PLAYER IS ON	ON WHEN START 2 PLAYER IS ON	*	*	*	ON IF COIN CHUTE #3 IS CLOSED	ON IF COIN CHUTE #2 IS CLOSED (IF USED)	ON IF COIN CHUTE #1 IS CLOSED
*	*	*	*	*	*	*	*

0 = SWITCH OFF (OPEN)
□ = SWITCH ON (CLOSED)
* = NOT USED

NOTE: Cross hatch pattern is used for Monitor setup pushing Fire Button will cause a red screen to check purity.

BASEMENT ARCADE CLASSICS
www.basementarcade.com

ZPU DIP SWITCH

SWITCH NO.	LOCATION	FUNCTION
SW. #1	F2	Signature analysis mode (service only)
SW. #2	F2	Signature analysis mode (service only)
SW. #3	F2	N/U
SW. #4	F2	N/U
SW. #5	F2	N/U
SW. #6	F2	N/U
SW. #7	F2	Extra man at 5,000
SW. #8	F2	Extra man at 10,000
SW. #9	F3	Switch test (See Page 13)
SW.#10	F3	Cross hatch (See Note Below)
SW.#11	F3	N/U
SW.#12	F3	N/U
SW.#13	F3	N/U
SW.#14	F3	N/U
SW.#15	F3	Coin Instruction Translation
SW.#16	F3	(See Page 14)
SW.#17	F4	Coin
SW.#18	F4	Chute
SW.#19	F4	#1
SW.#20	F4	See Page 13
SW.#21	F4	N/U
SW.#22	F4	N/U
SW.#23	F4	N/U
SW.#24	F4	N/U
SW.#25	F5	Coin
SW.#26	F5	Chute
SW.#27	F5	#2
SW.#28	F5	See Page 13
SW.#29	F5	N/U
SW.#30	F5	N/U
SW.#31	F5	N/U
SW.#32	F5	N/U
SW.#33	F6	Coin
SW.#34	F6	Chute
SW.#35	F6	#3
SW.#36	F6	See Page 13
SW.#37	F6	N/U
SW.#38	F6	N/U
SW.#39	F6	N/U
SW.#40	F6	N/U

NOTE: Cross hatch pattern is used for Monitor setup. Pushing the Fire Button will cause a red screen to check purity. Pushing the Fire Button again will cause a return to the crosshatch pattern, etc.

www.basementarcade.com

DIP SWITCH ADJUSTMENTS

CREDIT/COIN ADJUSTMENTS:

The credits given are selectable by means of ZPU switches. Sixteen credit ratios are available. The ZPU switch settings and resultant credits/coin are as follows:

COIN	ZPU SWITCHES			
CHUTE No. 1 (BLU/WHITE) LEFT	20	19	18	17
CHUTE No. 2 (BRN/WHITE) CENTER	28	27	26	25
CHUTE No. 3 (RED/WHITE) RIGHT	36	35	34	33

				CREDITS	COIN
OFF	OFF	OFF	OFF	1	
OFF	OFF	OFF	ON	2	
OFF	OFF	ON	OFF	3	
OFF	OFF	ON	ON	4	
OFF	ON	OFF	OFF	5	1
OFF	ON	OFF	ON	6	
OFF	ON	ON	OFF	7	
OFF	ON	ON	ON	10	
ON	OFF	OFF	OFF	14	

				CREDITS	COINS	SEQUENCE OF CREDITS PER COIN			
						1	2	3	4
ON	OFF	OFF	ON	1	2	0	1		
ON	OFF	ON	OFF	3	2	1	2		
ON	OFF	ON	ON	5	2	0	5		
ON	ON	OFF	OFF	7	2	0	7		
ON	ON	OFF	ON	3	4	0	1	0	2
ON	ON	ON	OFF	5	4	1	1	1	2
ON	ON	ON	ON	7	4	1	2	1	3

If two or three coin chutes are adjusted the same for multiple coins, credits will increase as if dropped in same chute.

SIGNATURE ANALYSIS MODE (SERVICE ONLY) SW. #1 & 2

See the "Stern Video System 1000 Signature Analysis Manual."

SW. #7

When score of 5,000 is achieved a Extra Man can be awarded.

5,000 SCORE AWARDS	EXTRA MAN	ON	OFF
SW. #7	NO		X
SW.# 7	YES	X	

EXTRA MAN BONUS (SW. #8)

When score of 10,000 is achieved a Extra Man can be awarded.

10,000 SCORE AWARDS	EXTRA MAN	ON	OFF
SW. # 8	NO		X
SW.# 8	YES	X	

SWITCH TEST (SW. #9)

With switch in "ON" position, monitor will display "OPEN" or "CLOSED" position on each Dip Switch or Game Switch (See Page 11 for diagram)

www.basementarcade.com

BASEMENT ARCADE CLASSICS
www.basementarcade.com

BOOKKEEPING

Inside the coin door is the BMDS (Bookkeeping Monitor Display Switch) - (See Fig. A). Depressing this switch one time initiates this function. The first bookkeeping function to appear on the monitor is number of credits (*Green). To delete from memory press either **Fire Button.** Depressing the BMDS one more time will advance the bookkeeping up (*Blue), and the second bookkeeping function (total coins thru coin chute #1) will be displayed on the botton (*Green). To delete from memory press either **Fire Button.** The previous bookkeeping functions will remain on the screen (*Blue) and the new function will appear on the botton (*Green). Bottom function can be deleted from memory. Following is a complete list of bookeeping functions.

*Color of display if color monitor is used.

	FUNCTION	DESCRIPTION	DIGIT DISPLAY
1)	Credits	Total Credits	00
2)	Chute #1 (Left)	Total Coins	00000000
3)	Chute #2 (Center)	Total Coins	00000000
4)	Chute #3 (Right)	Total Coins	00000000
5)	Plays	Total Number of Plays	000000
6)	Score	Accummulated Score	000000000000
7)	Time Played	Total Amount of Time Played (in seconds)	000000000000
8)	High Score	High Score To Date	000000

COIN INSTRUCTION TRANSLATION (SWS. #15 & 16)

Will say in different language correct coinage

	SW.-#15	SW.-#16
ENGLISH	OFF	OFF
FRENCH	OFF	ON
GERMAN	ON	OFF
SPANISH	ON	ON

www.basementarcade.com

TROUBLE SHOOTING BY SELF-TESTS

PERTINENT INFORMATION

1. The following tests occur each time the RESET button is momentarily pressed or when power is removed and re-applied.
2. The self-test indicating LED is on the ZPU-1000 board (CR45) and each indicating flash is accompanied by a tone from the sound system.
3. The LED stops flashing at the malfunction provided all PC boards are connected in the system.

NOTE: If the ZPU-1000 board is not connected to the VFB-1000/BSC-1000 board combination, the self-test program will continuously cycle and counting LED flashes is meaningless. Also, if the SB-1000 board is not connected, or if it is defective, no self-test tone will be generated.

FIRST SELF-TEST

The first of 8 LED flashes occur accompanied by a tone from the speakers. This first test analyzes the ROM circuits on the ZPU board.

ANALYSIS OF FIRST TEST WHEN LED STAYS ON

Continuous illumination of the LED indicates problems in one or more of the following areas:

1. The POWER-ON RESET circuit. Check NAND gate 7G, inverter 8G and associated circuits.
2. Loss of clock signal. Check oscillator transistor Q12, flip flop divider 8A and other associated components.
3. Microprocessor (Z-80) is defective (Chip 7B).
4. Defective Address Bus (shorted or open) or control buffers (chips 6B and 7D, type LS244).
5. Defective ROM chip(s).
6. Defective I/O Decode Circuits. Check chips 5A, 4A, 6A, 7G and decoder 7E.
7. Defective LED latch. Check chips 7G, 3A, and 8G.

Analysis of First Test when LED Flashes Once and stays OFF. This sympton indicates the problem is in one or more of the following areas.

1. Defective PROM circuitry. Check all PROM chips since the malfunction may be in any one chip.
2. Defective Address Decode Circuit. Check chips 6E, 4A, 5A, 6A and 8G.

www.basementarcade.com

BASEMENT ARCADE CLASSICS
www.basementarcade.com

SECOND SELF-TEST

The second of 8 LED flashes should occur accompanied by a tone from the speaker. This test analyzes the "scratch pad" area of the RAM on the ZPU-1000 board. For the following diagnostics, the LED must flash twice and extinguish.

ANALYSIS OF SECOND TEST

NOTE: All following chips are on the ZPU-1000 Board.

1. Check RAM CHIPS 1E and 2E.
2. Check transistor Q2 and associated components/circuits.
3. Defect in gating chips 2A, 3A and 6A.
4. Check that the jumper used for chip 1E (W5, W6 or W11) is correct for the particular chip part number. See page 10 for jumper options.

THIRD SELF-TEST

The third of 8 LED flashes should occur accompanied by a tone from the speaker. This test analyzes the RAM (screen RAM) located on the VFB-1000 board. For the following diagnostics, the LED must flash three times and extinguish.

NOTE: The following chips are on the VFB-1000 Board.

1. The CRT will display a RAM chip location map which will indicate a defective chip. Mentally rotate the map 90 degrees counterclockwise to properly orient the map with the lower right hand portion of the VFB-1000 board. If the defect is not located, use the following steps:
2. Check the +12V and -5V voltages, specifically to the VFB-1000 board.
3. Check RAM address Multiplexers 6F, 6G, 6H and 6E.
4. Check the RAS* and CAS* circuits: chips 4E, 7E, 1G, 5G and 5F.
5. Check the "RAM write" circuits: chips 5F and 5E.
6. Check the Address/Arbitration circuits, chips 5G, 5F, 7E, 3F, 1F and 2D. Check that switch 2B (contacts 4 & 5) is set to the ON position.
7. Check the "magic" enable circuits of chips 7B and 5C.
8. Check the "write" data path of chips 7A, 8A, 10A, 11A, 12C and 10C.
9. Check the "Read" data path of chips 10D, 11D and 6D.
10. Checks all Bus connectors, especially J1 and J2 on both the VFB-1000 and BSC-1000 boards.

*Denotes negative true logic

www.basementarcade.com

FOURTH SELF-TEST

The fourth flash plus a tone test the RAM circuits on the BSC-1000 color board. IF the LED stops on the fourth flash, perform the following listed tests:

NOTE: All following chips will be on the BSC-1000 board.

1. Check RAM chips 3B, 2B, 1B, and 2A.
2. Check the Address Multiplexer chips 4C, 4B and 4A.
3. Check that DIP Switch 2F (pins 4 & 8) is set to the ON position.

FIFTH SELF-TEST

The fifth flash plus tone test the Shifter/Flopper circuits on the VFB-1000 board. If the LED stops on the fifth flash, perform the following tests.

1. Check Shifter/Flopper chips 7A, 8A, 9A, 10A, 11A, 8B, 9B, 10B, 11B.
2. Check ENABLE gates 7B and 5C.
3. Check control latch 6C.
4. Check "OLD DATA" latch 7C.
5. Check Port Decoder 4D.

SIXTH SELF-TEST

The sixth flash plus a tone tests the Arithmetic and Logic Unit (ALU) and the intercept circuits on the VFB-1000 board.

NOTE: All following listed chips are on the VFB-1000 board.

1. Check ALU chips 12C, 10C.
2. Check ENABLE gate 5C.
3. Check the Intercept gates 12A, 12B.
4. Check Flip-Flop 6B and associated gates of 5G and 1H.

www.basementarcade.com

BASEMENT ARCADE CLASSICS
www.basementarcade.com

SEVENTH SELF-TEST

The seventh flash plus a tone tests the Interrupt and Non Maskable Interrupt (NMI) circuit portions which are on both the ZPU-1000 and VFB-1000 boards. When the LED stops at the seventh flash, perform the following tests:

1. Check that Dip Switch 2B (pins 3-6 and 2-7) is set to on.
2. Z-80 microprocessor.
3. Interrupt generating circuitry 1G, 3D, 2D.
4. Time Gating circuity 1E, 2F, and 2E.
5. NMI ENABLE Latch 1D.
6. NMI generating circuitry 2E, 3E & 2D.

EIGHT SELF-TEST

If the LED indicator and associated tone have occured eight times, the malfunction is either in a circuit that is not within the testing capabilities of this self-test program or the problem is unique such as an intermittent condition that changes with physical movements or temperature.

After eight flashes have been obtained, try the game to see if the problem has been removed by the check-out action. If the game operates properly, it is advisable to attempt to locate the former problem by checking all connectors for tightness. Also lightly tap various areas while viewing the CRT.

If eight flashes have occurred and the game is still inoperable, the following information outlines the circuits that are not part of the self-test routine and must be verified by other test methods:

1. Check the settings of all DIP switches on the ZPU-1000 and VFB-1000 boards by setting switch S9 (on ZPU-1000) to ON and then pressing the RESET* button (on ZPU-1000). The CRT will display the ON/OFF conditions of all switches which must then be checked against the Installation and Operating manual data.
2. Visual analysis of the CRT pattern (when it is available) can provide many clues to circuit operation as described in the following paragraphs. Total loss of the CRT display usually indicates problems in the monitor itself.
3. Malfunctions in the horizontal or vertical address counting circuitry, or SYNC generator circuits will cause "bad" video to be displayed. Vertical or horizontal stripes should give an indication of where the error is. A rolling or flipping picture is an indication of SYNC problems, either in the monitor or on the VFB-1000 board SYNC circuits.
4. Color splotches are an indication of a malfunction in the color gating circuitry, or a monitor problem. Check BSC-1000 board chips 2C, 1C, 2D, 3D, 3E and associated switches and resistors.

www.basementarcade.com

SOUND SYSTEM PROBLEMS

1. NO SOUND; Check amplifier 8C on the SB-1000 board. Check VAUDIO (+15V MAX).
2. Voice is normal but there are no sound effects: Check the 6840 chip on the VSU-1000 board. On this board check that Dip Switch 10B (pin 1-8) is in the ON condition. Check the addressing and timing circuitry chips 6A, 8A, 9B, 9A, 9C, 10C, 8A and 10B. Any other malfunction will result in either the loss of a specific sound or, a change in a sound and can thus be identified as a related circuit.
3. Sound effects are normal but there is no voice: Check VSU-1000 chips: CRC ROM chip 3C, PROMs 1C, 2C, clock generator 5A, 6A, decode & control logic 1A, 2A, 3A, 4A, 2B, 5B, 6B, 6C. Also check the -10V supply (on the board). Distorted Noise: check PROM 1C, 2C, CRC ROM chip 3C, filter & amplifier 5C.

www.basementarcade.com

BASEMENT ARCADE CLASSICS
www.basementarcade.com

RF INTERFERENCE PROBLEMS

Warning: This equipment generates, uses, and can radiate radio frequency energy and if not installed and used in accordance with the instructions manual, may cause interference to radio communications. As temporarily permitted by regulation it has not been tested for compliance with limits for Class A computing devices pursuant to Subpart J of Part 15 of FCC Rules, which are designed to provide reasonable protection against such interference. Operation of this equipment in a residential area is likely to cause interference in which case the user at his own expense will be required to take whatever measures may be required to correct the interfernce.

www.basementarcade.com

STERN®
ELECTRONICS, INC.
1725 Diversey Parkway, Chicago, Illinois 60614
(312) 935-4600, Telex 25-4657
Toll Free Service Assistance (800) 621 6424

www.basementarcade.com
BASEMENT ARCADE CLASSICS

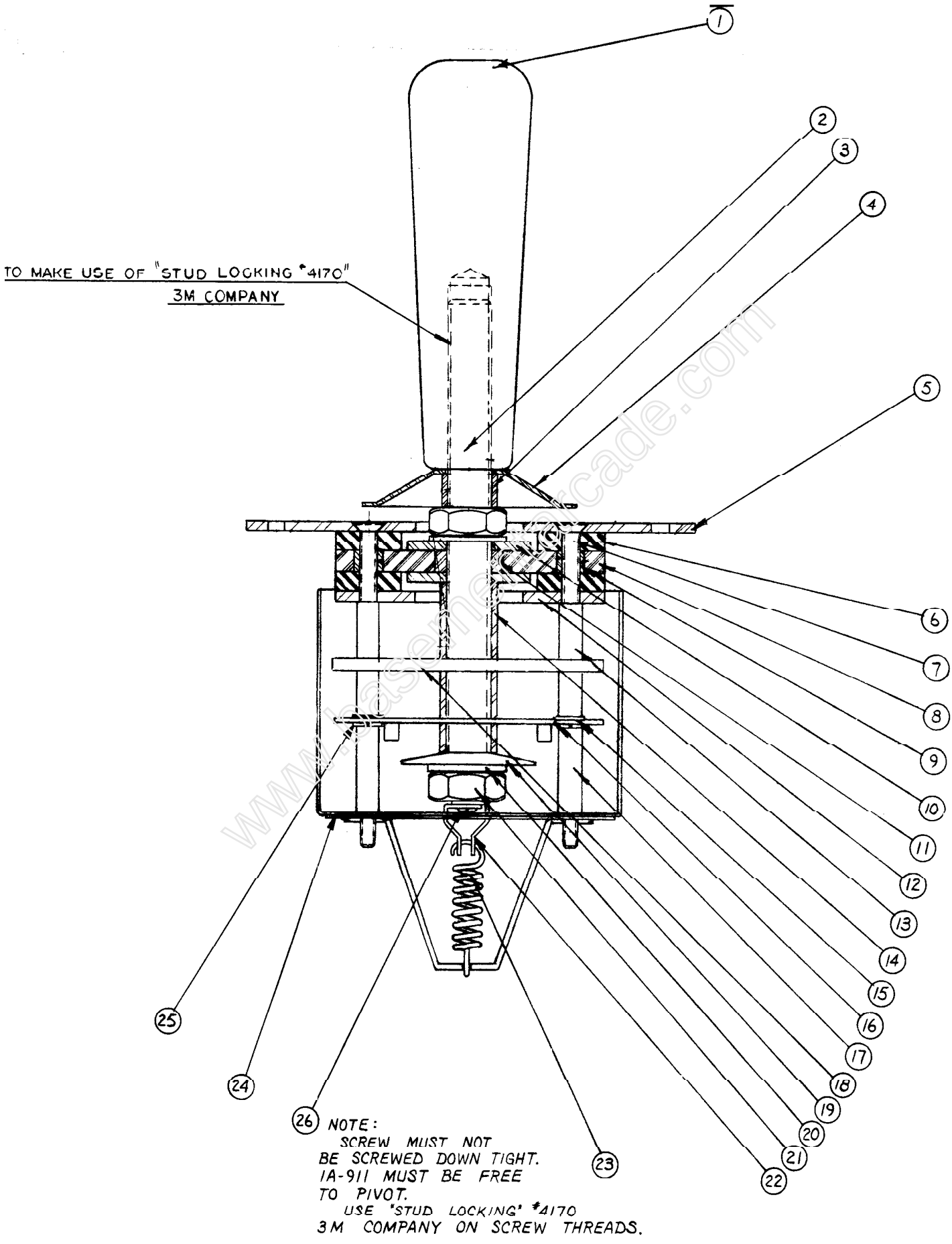

CONTROL STICK ASSEMBLY

www.basementarcade.com

ITEM	PART NO.	DESCRIPTION	REQ'D.
1	4A-365	PLASTIC HANDLE	1
2	2A-325-B	THREADED ROD	1
3	2A-332-1	SPACER	1
4	3A-197	WASHER	1
5	1A-786	MOUNTING PLATE	1
6	1A-809	SPACER	2
7		#8-32 x 2 1/2 LG. SLOT. FLAT H. SCREW	4
8	7A-136	RUBBER SPACER	1
9	2A-331	SPACER	4
10	3A-195	WASHER	2
11	2A-329	SPACER	1
12	1A-893	PLATE	1
13	2A-334	SPACER	8
14	2A-332	SPACER	1
15	4A-364	FIBER WASHER	4
16	PRU-1000	P.C. BOARD ASSEMBLY	1
17	2A-326-1	THREADED SPACER	4
18	1A-906	LIMIT PLATE	1
19	2A-328	CONICAL WASHER	1
20	3A-196	EXTERNAL SHAKEPROOF LOCKWASH.	2
21	17A-169	JAM NUT	2
22	1A-911	SPRING HOLDER	2
23	5A-182	SPRING	1
24	B-801	JOY STICK BOX ASS'Y.	1
25	3A-135	SPLIT LOCKWASHER	4
26		6x32x3/8 S.H.W.H. TREAD FORMING SCREW	1

www.basementarcade.com

BASEMENT ARCADE
www.basementarcade.com CLASSICS

BERZERK PACKING LIST

12G-5-132	Catalog
12D-708-S/12C-719-S	Schematic
12D-661-S/12D-665/S	Schematic
12D-668-S/12D-788-S	Schematic
12D-660-S/12D-766-S	Schematic
12D-809-S	Schematic
12B-339	Electro Home
OR	OR
K-4615-5808	Wells-Gardner
12B-2-132-23	English Instruction Card
OR	OR
12B-2-132-25	French Instruction Card
OR	OR
12B-2-132-27	German Instruction Card
OR	OR
12B-2-132-29	Spanish Instruction Card
8A-111-P75	¾ Amp Slo-Blo Fuse
8A-111-1	1 Amp Slo-Blo Fuse
8A-111-3	3 Amp Slo-Blo Fuse
8A-111-5	5 Amp Slo-Blo Fuse

www.basementarcade.com

12A-253-132

BASEMENT ARCADE CLASSICS
www.basementarcade.com

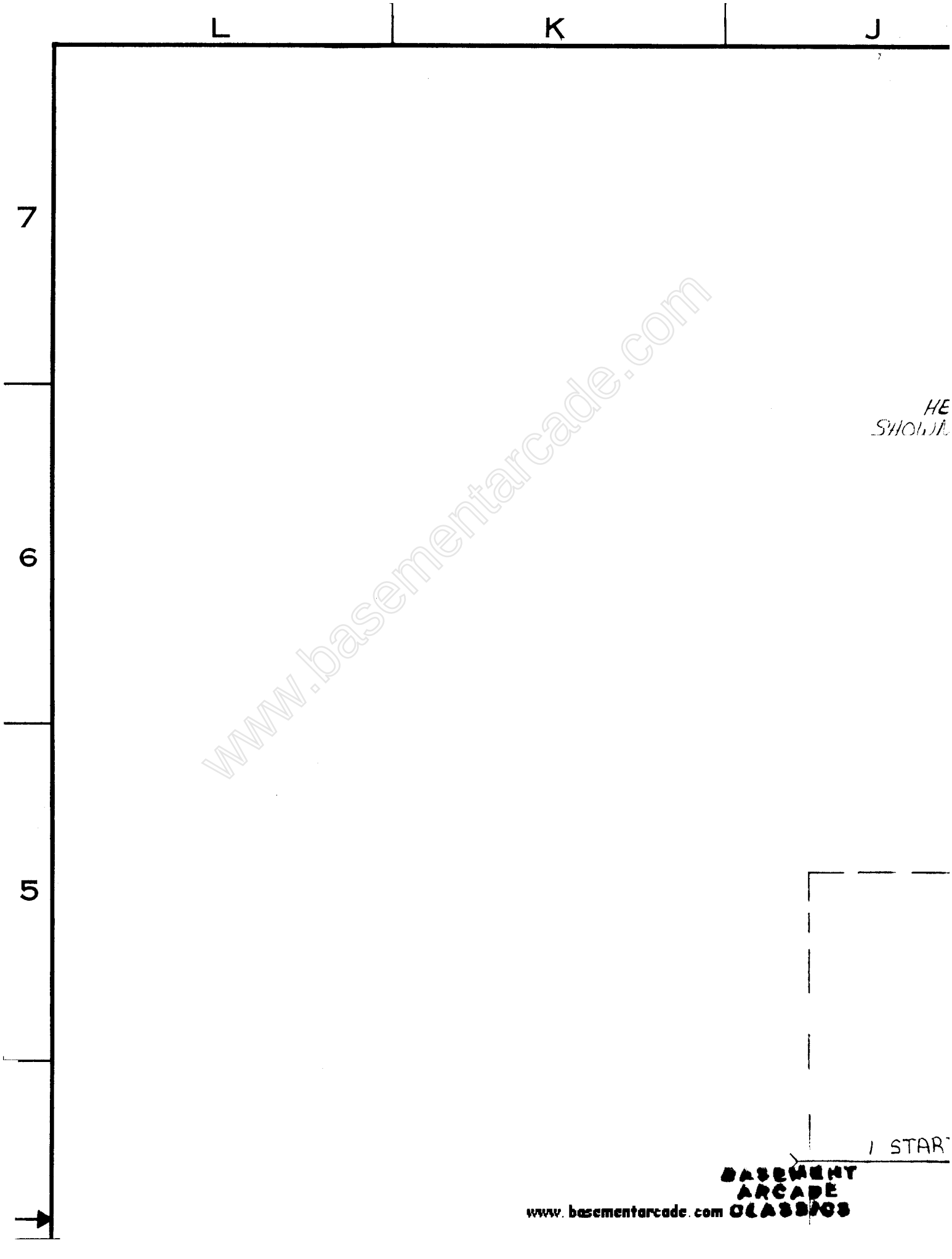

www.basementarcade.com

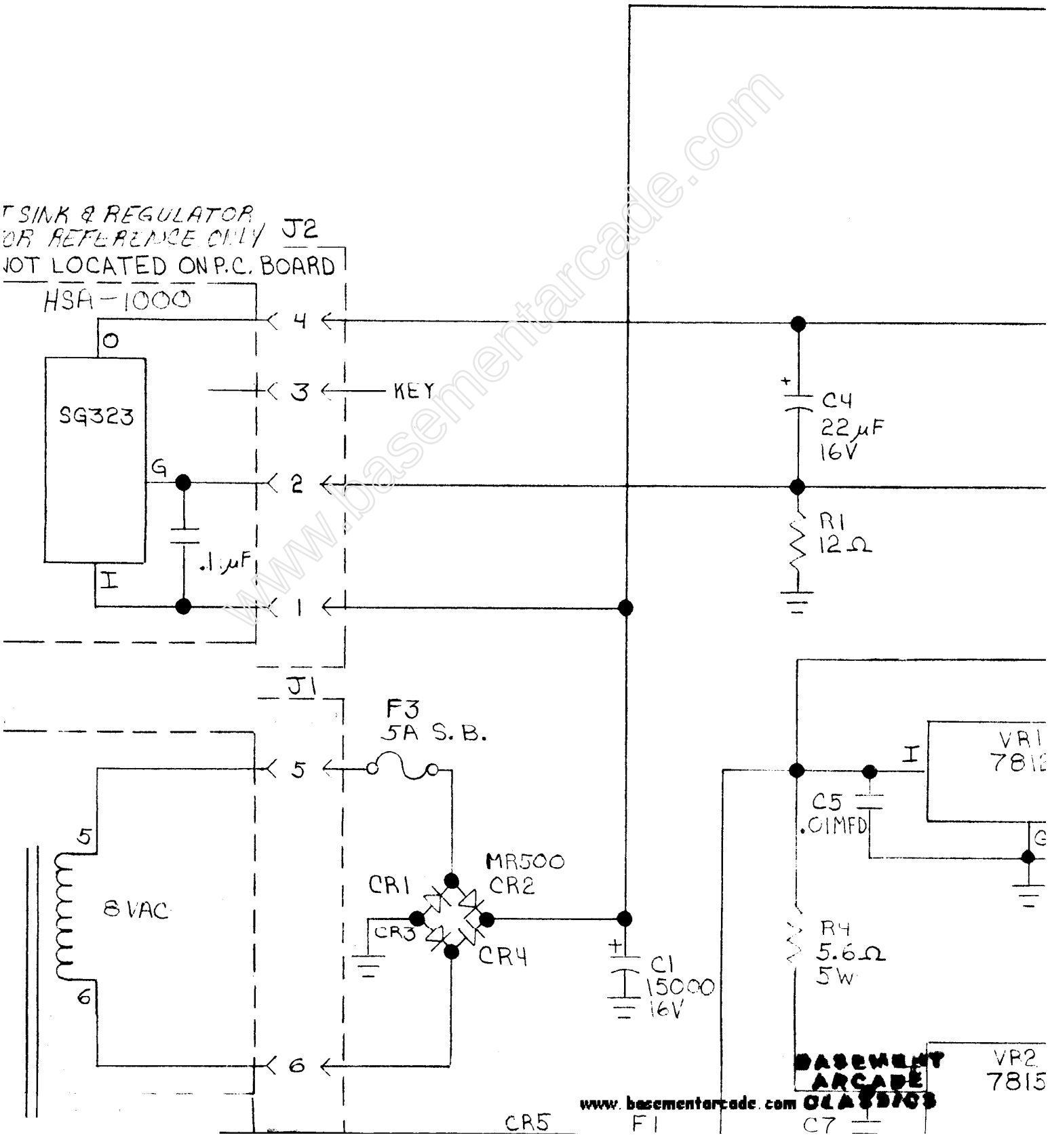

www.basementarcade.com

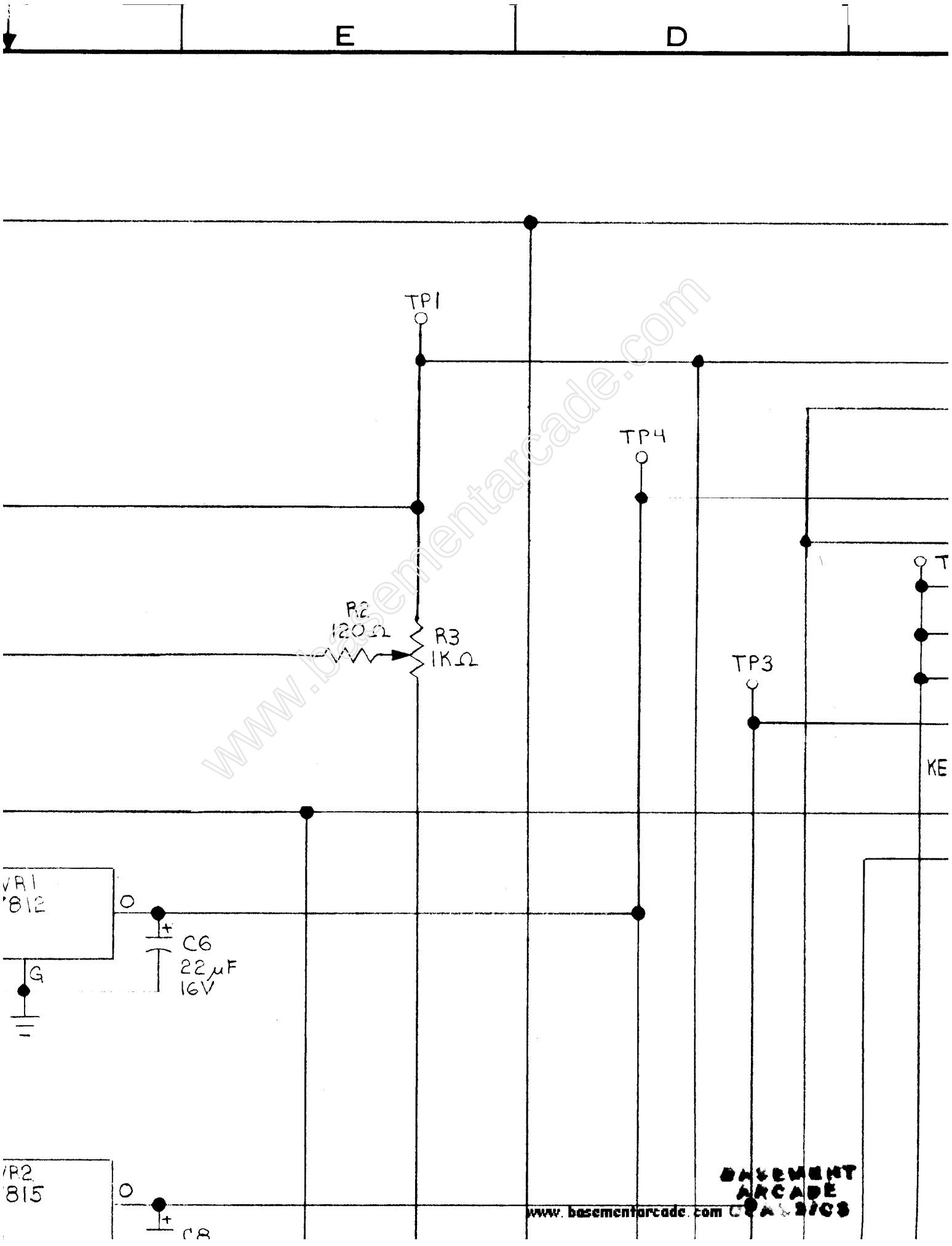

www.basementarcade.com

C B A

REVISIONS				
SYM	DESCRIPTION	DFT DATE	CHK DATE	APPD DATE
A	ISSUED, EI. 00285	T.H. 9/1/80	9/18/80	9/19/80

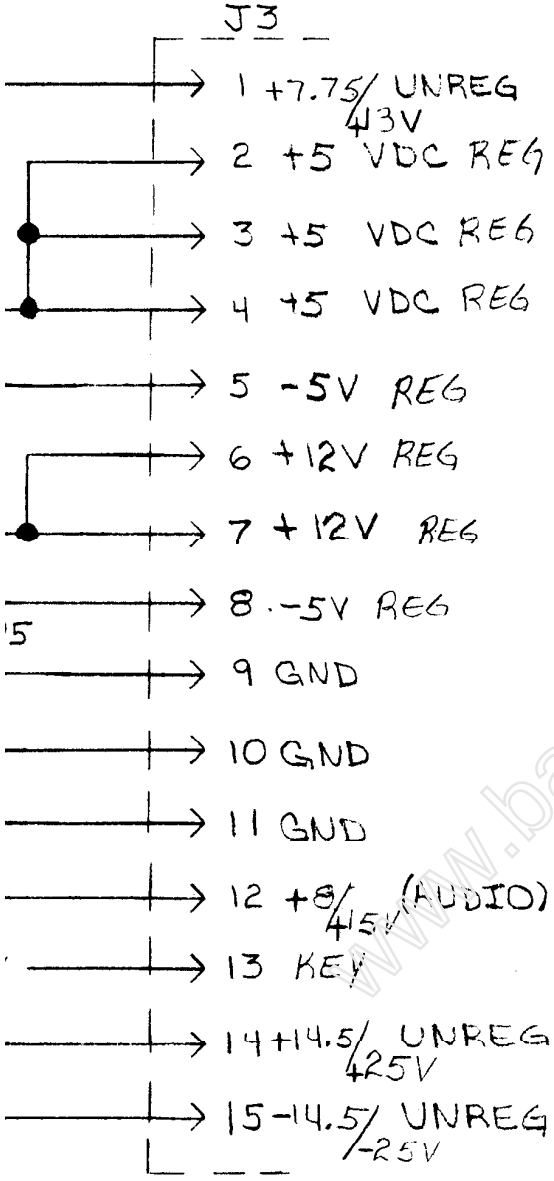

7

6

5

www.basementarcade.com

BASEMENT ARCADE CLASSICS
www.basementarcade.com

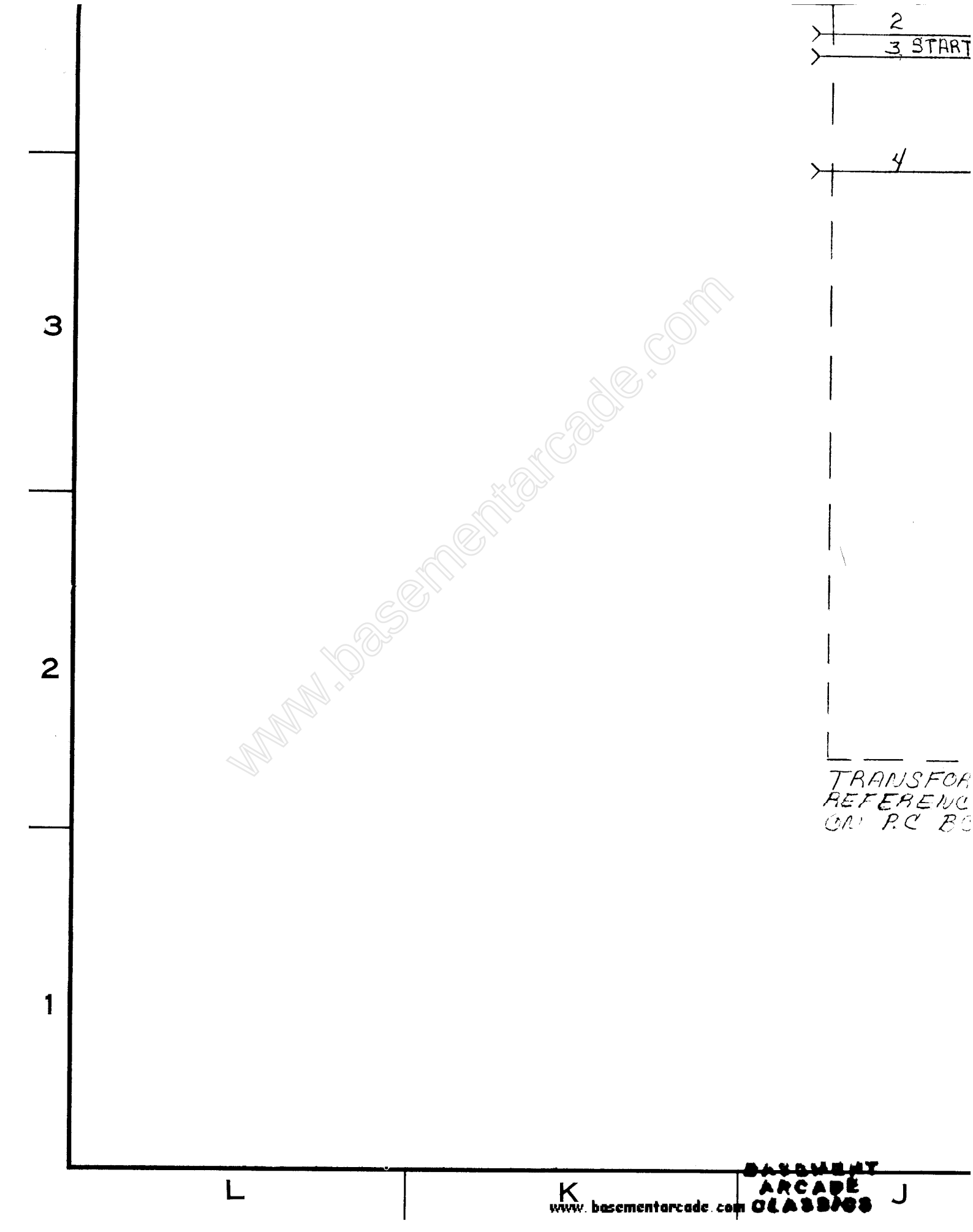

www.basementarcade.com
BASEMENT ARCADE CLASSICS

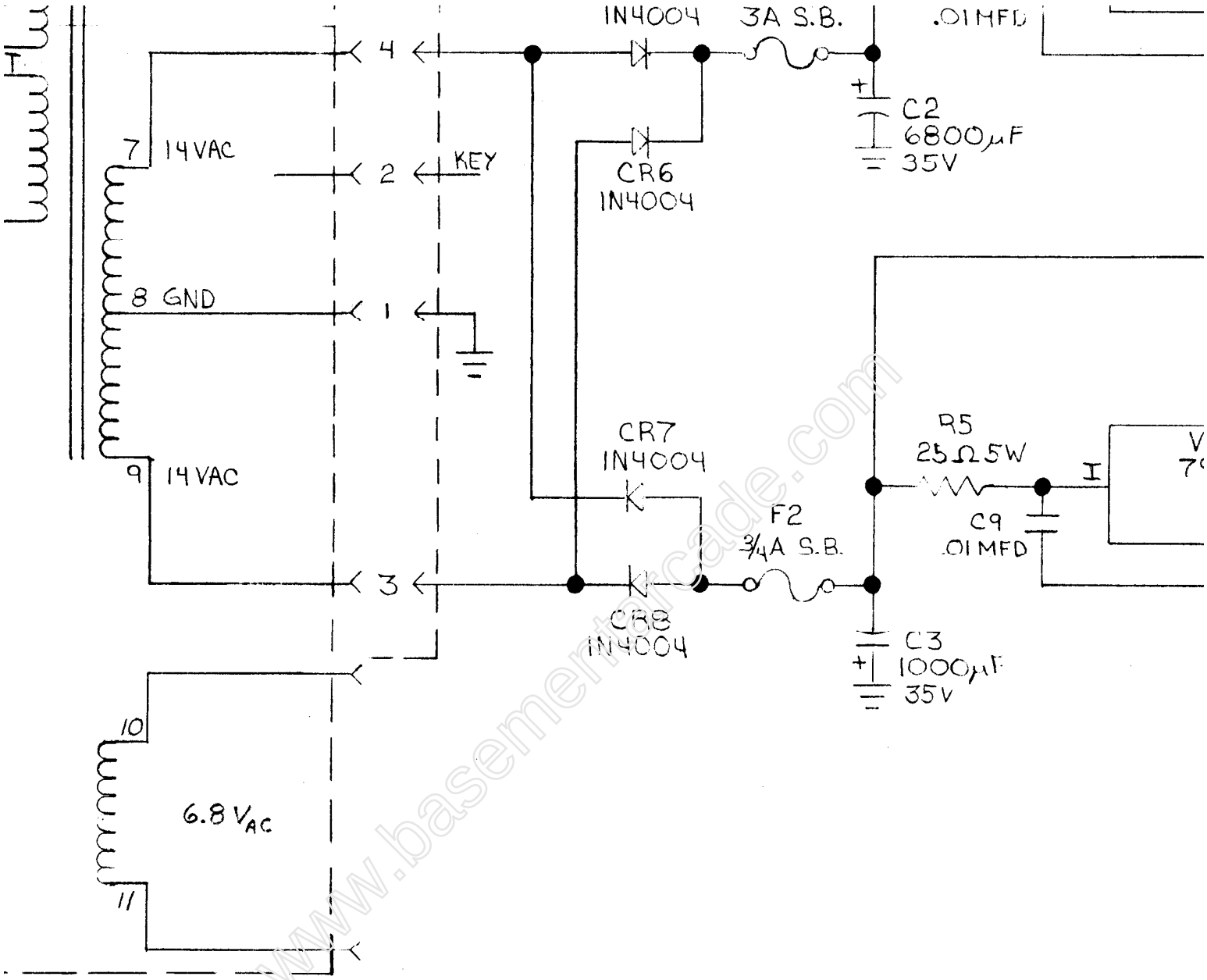

RMER SHOWN FOR
CE ONLY, NOT LOCATED
OARD

www.basementarcade.com

BASEMENT ARCADE CLASSICS
www.basementarcade.com

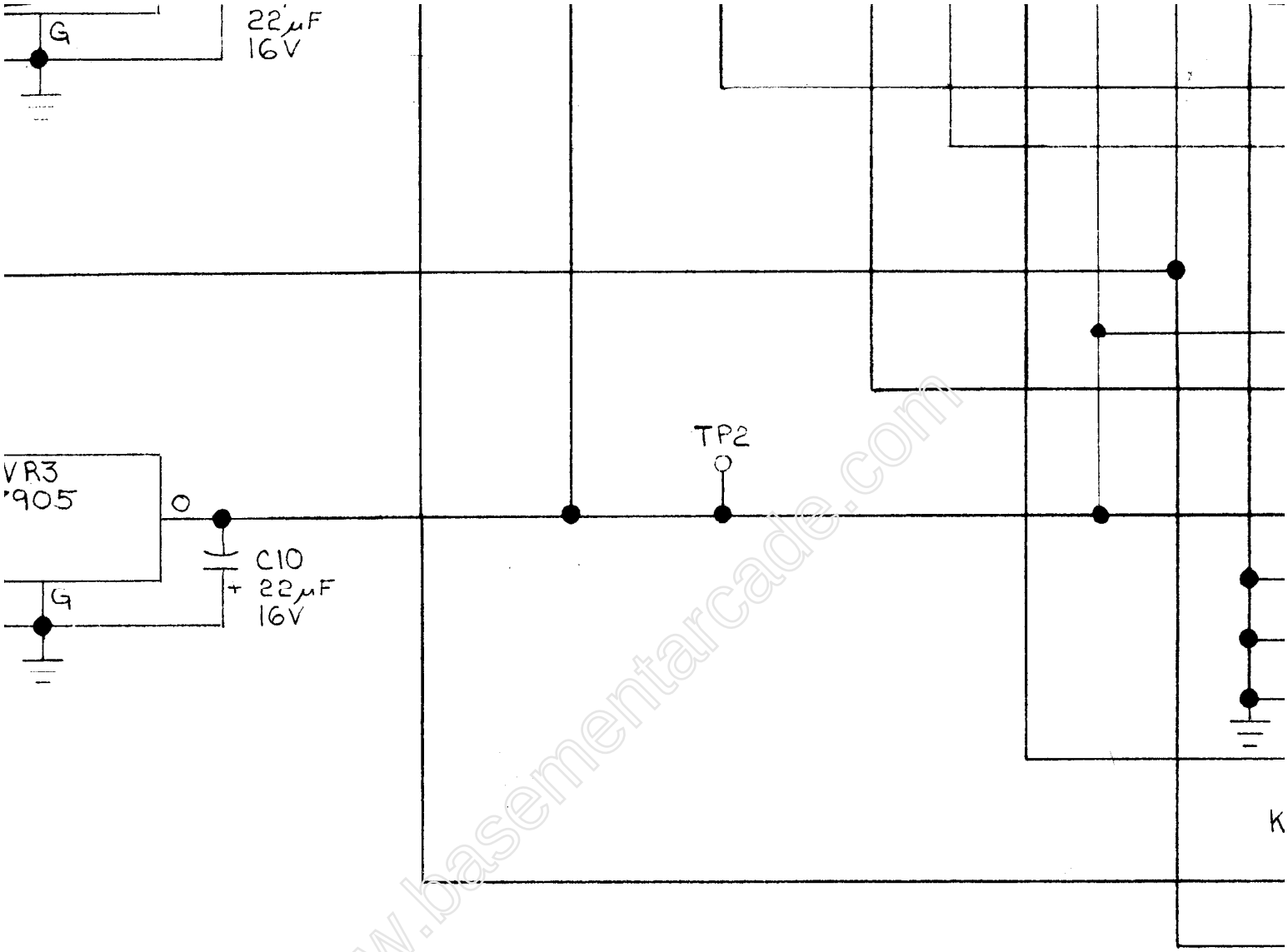

www.basementarcade.com

J4

1 +7.75/13V UNRG
2 +5 VDC REG
3 +5 VDC REG
4 +5 VDC REG
5 -5V REG
6 +12V REG
7 +12V REG
8 -5V REG
9 GND
10 GND
11 GND
12 +8/10V (AUDIO)
13 KEY
14 +14.5/25V UNREG
15 -14.5/25V UNREG

12D-668-5

www.basementarcade.com

STERN®

SCHEMATIC, POWER SUPPLY

12D-668-5

BASEMENT ARCADE CLASSICS
www.basementarcade.com

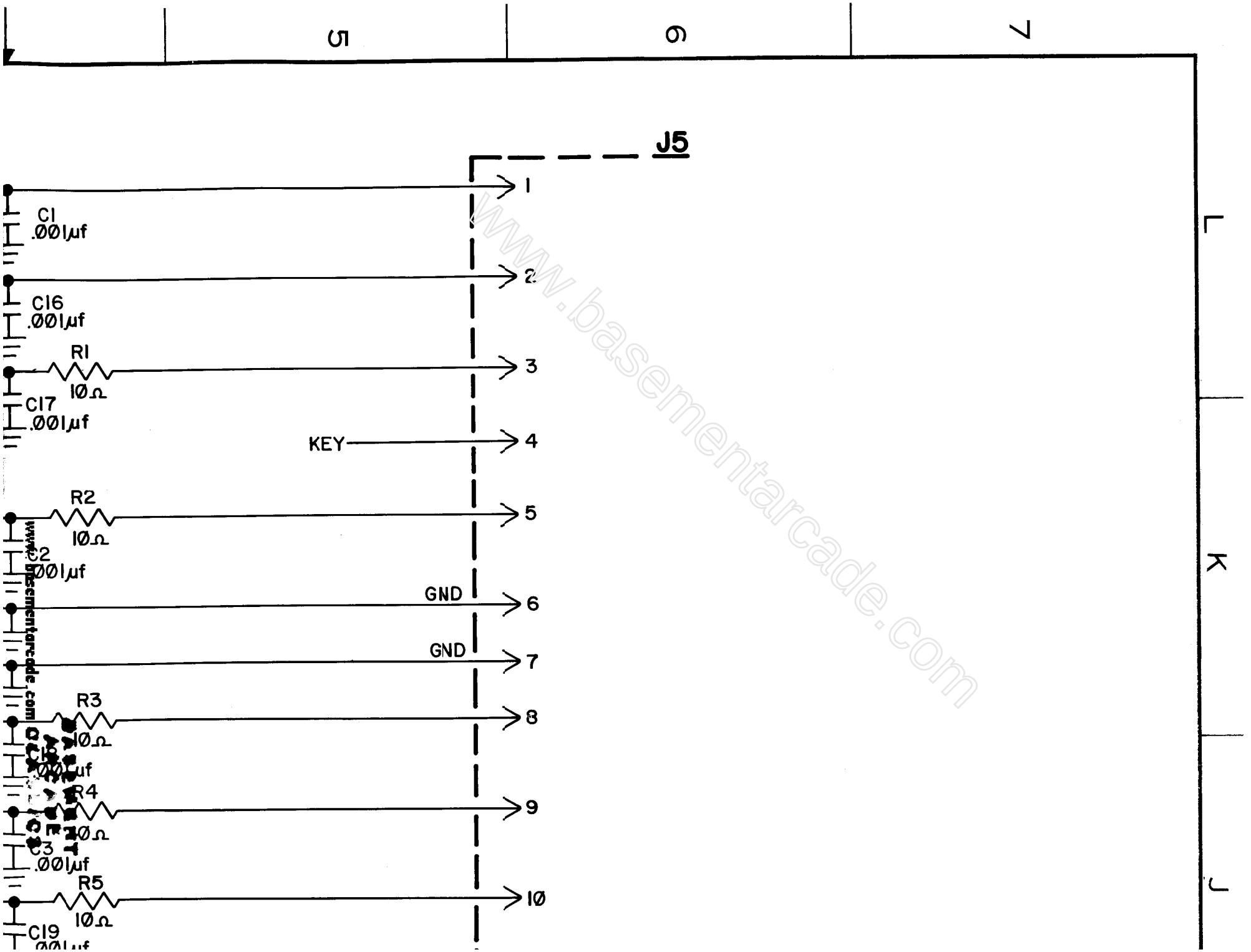

www.basementarcade.com

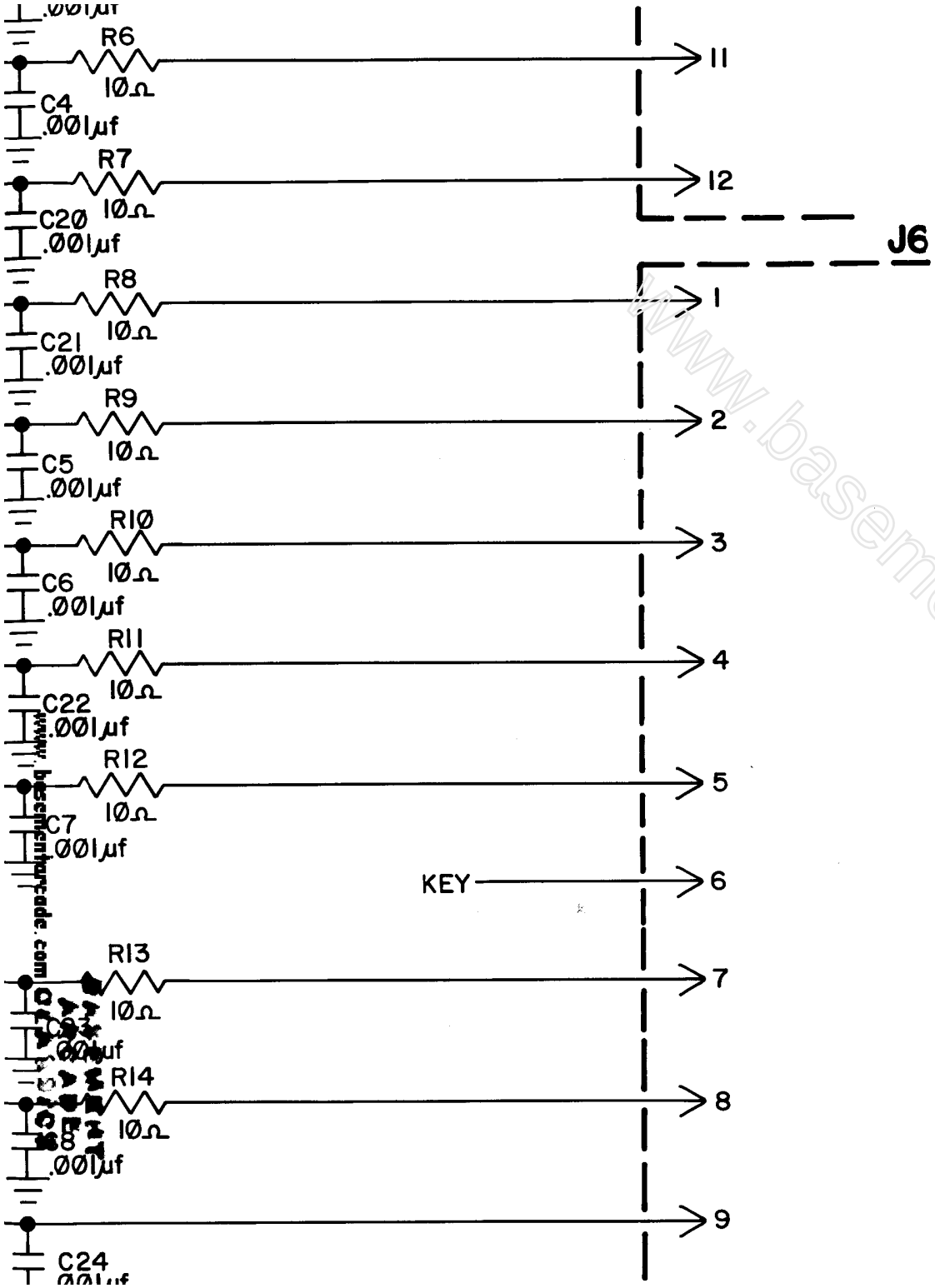

www.basementarcade.com

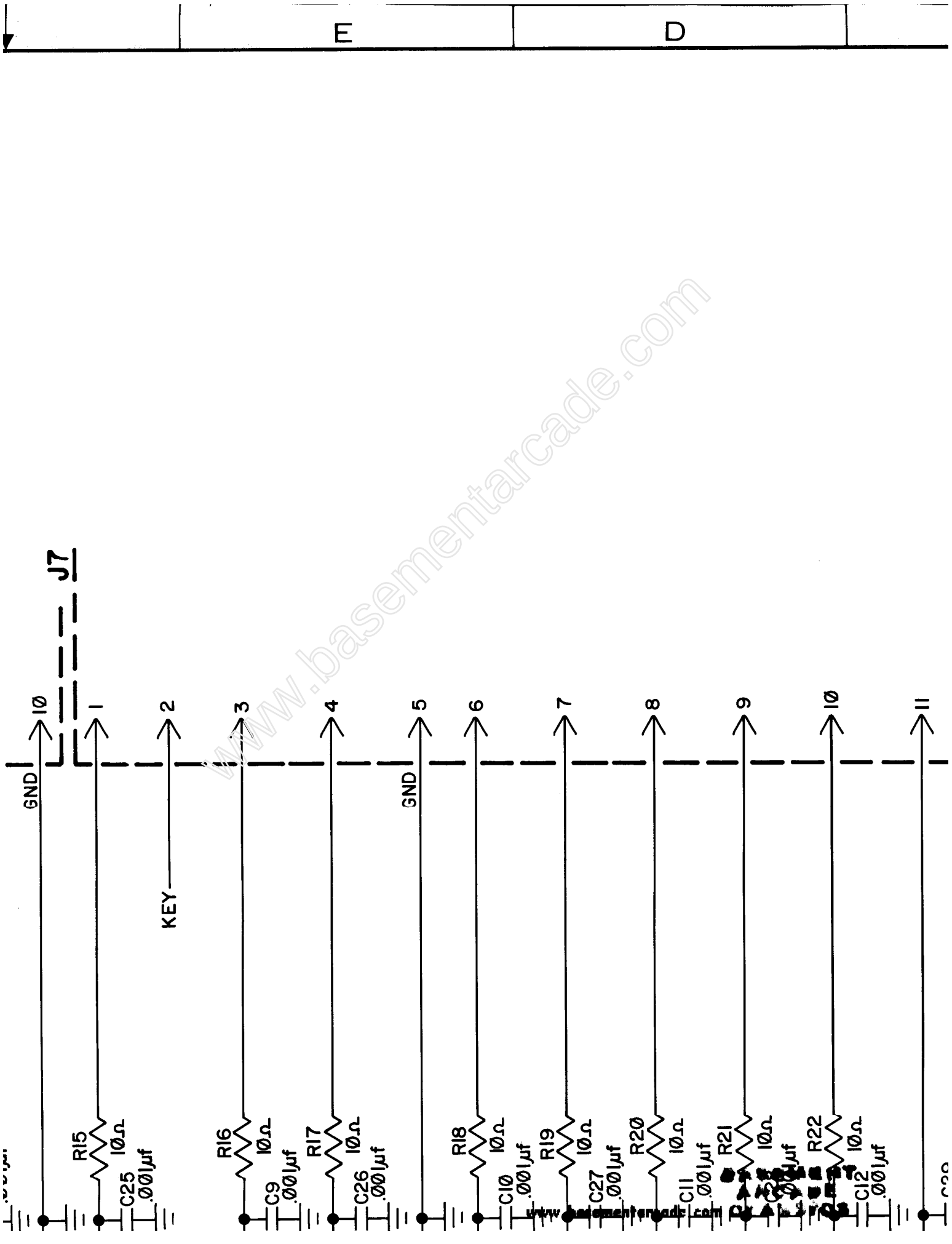

www.basementarcade.com

REVISIONS				
SYM	DESCRIPTION	DFT / DATE	CHK / DATE	APPD / DATE
A	ISSUED E.I. ØØ389	TN 9/22/80	[illegible]	[illegible]

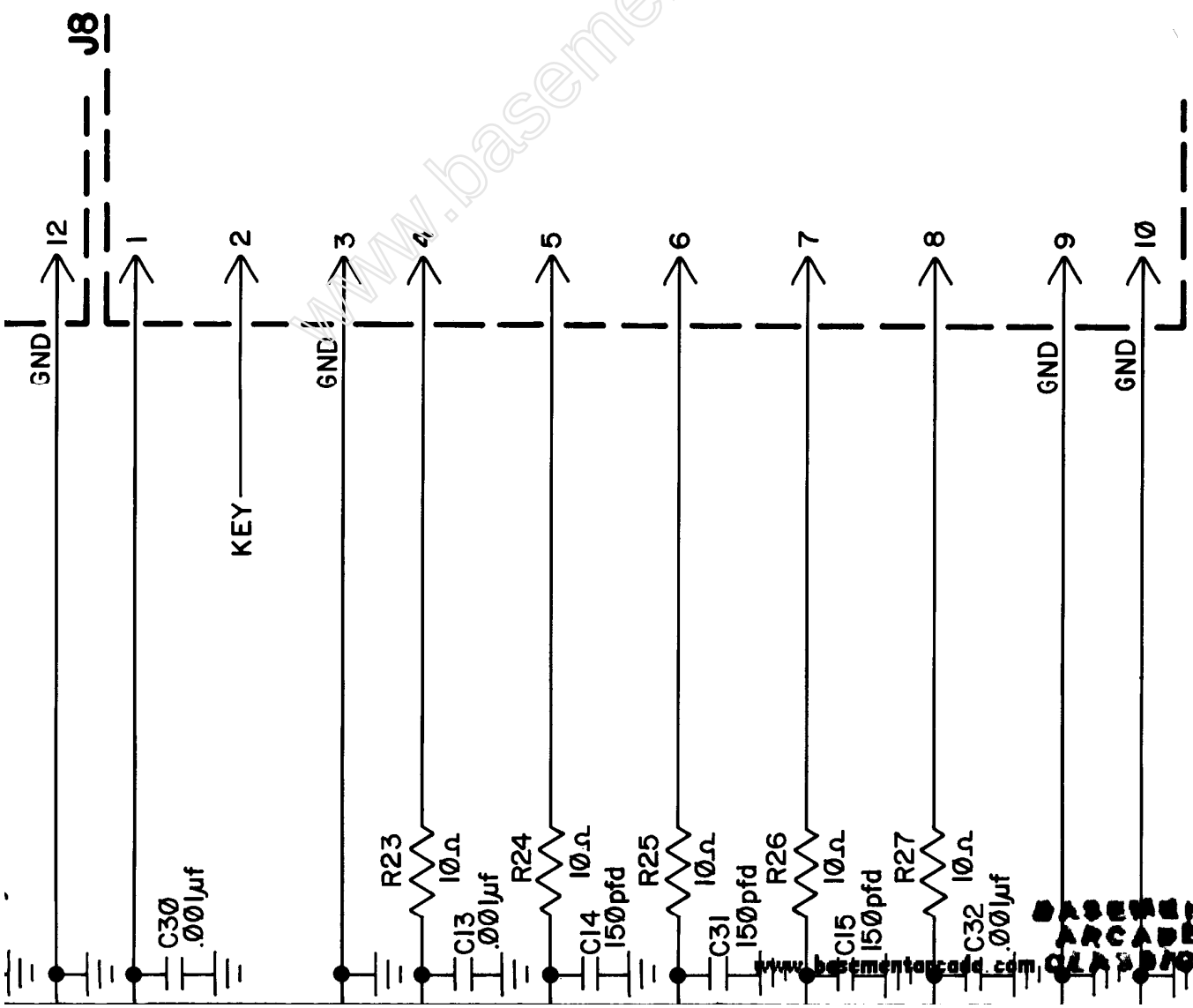

www.basementarcade.com
BASEMENT ARCADE CLASSICS
www.basementarcade.com

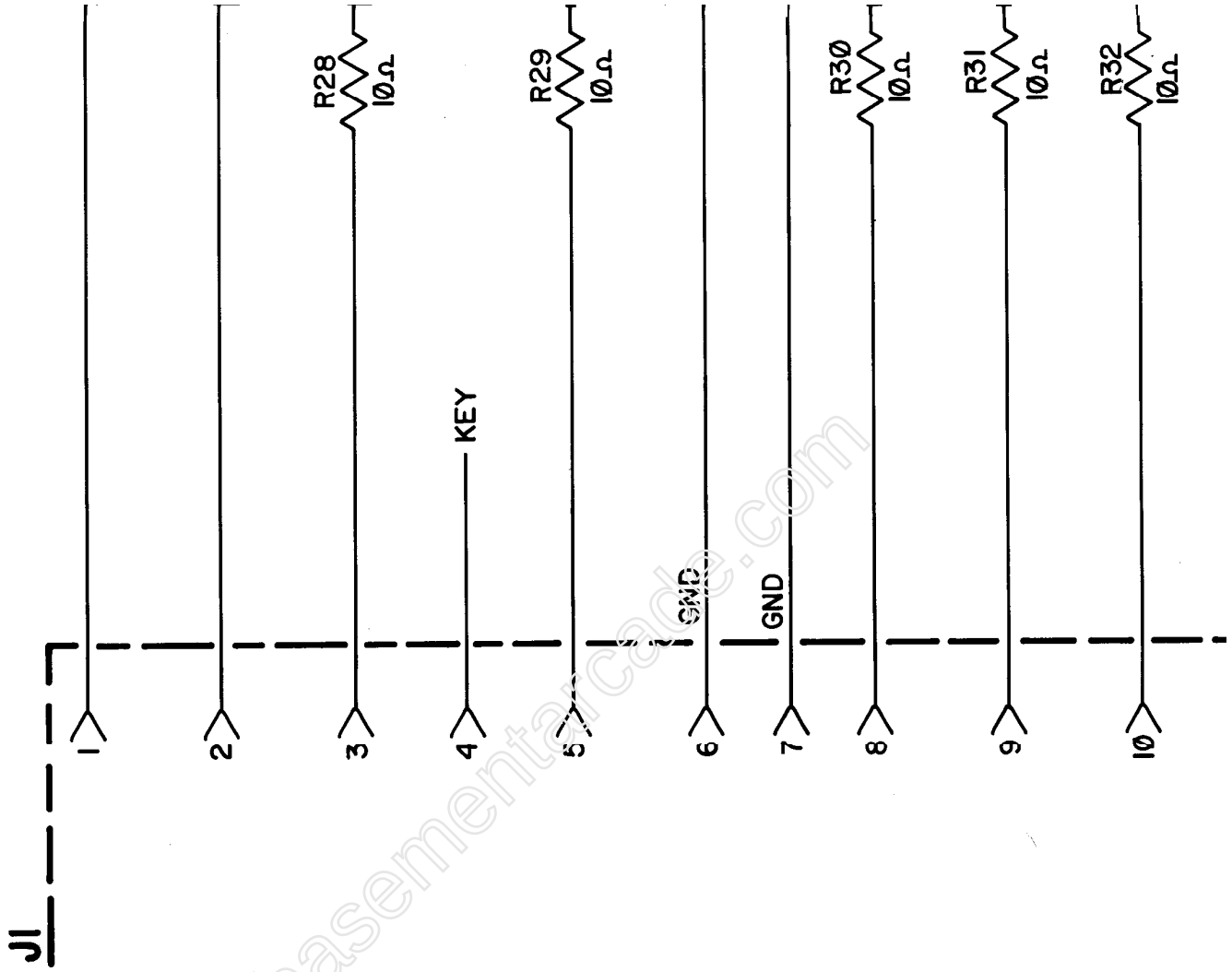

www.basementarcade.com

BASEMENT ARCADE CLASSICS
www.basementarcade.com

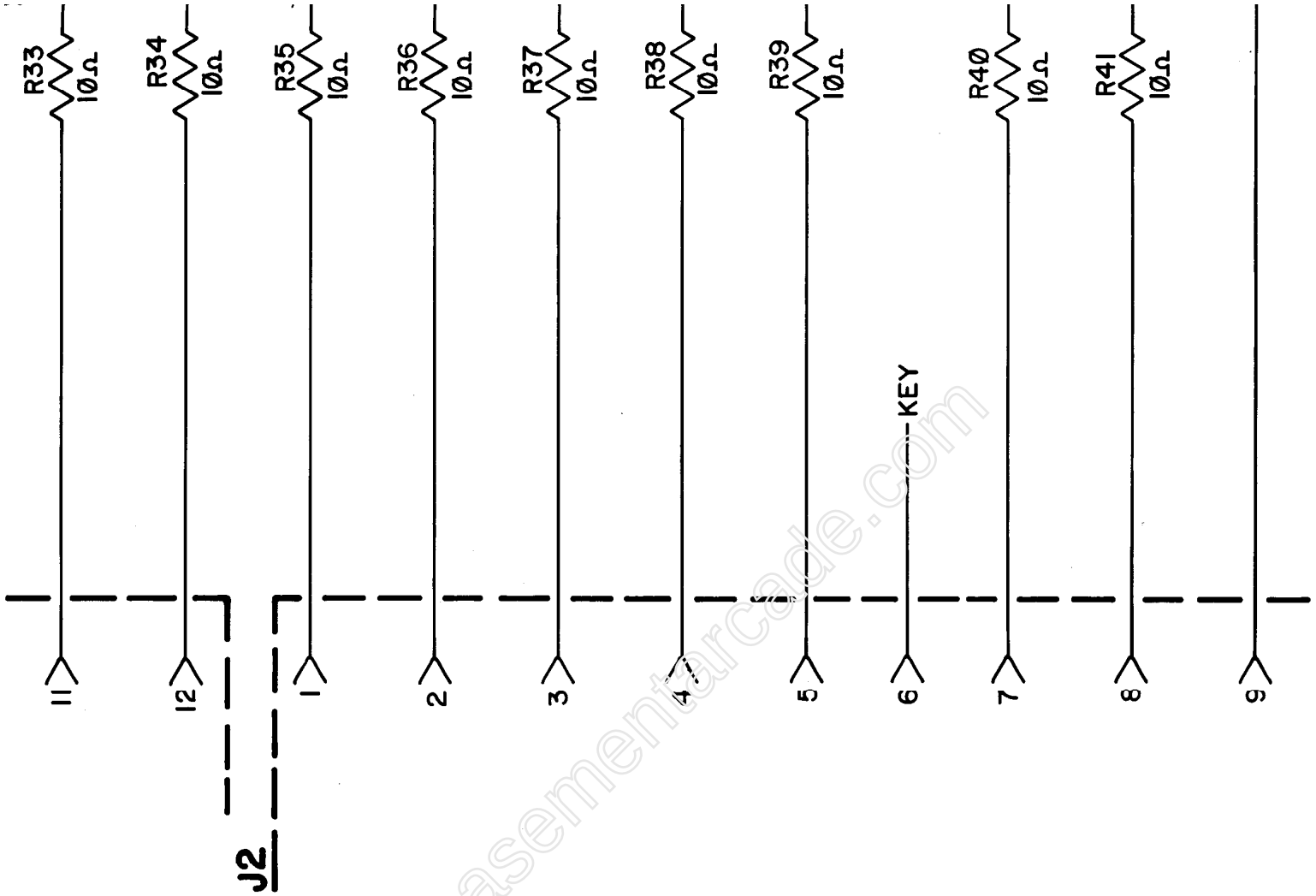

www.basementarcade.com

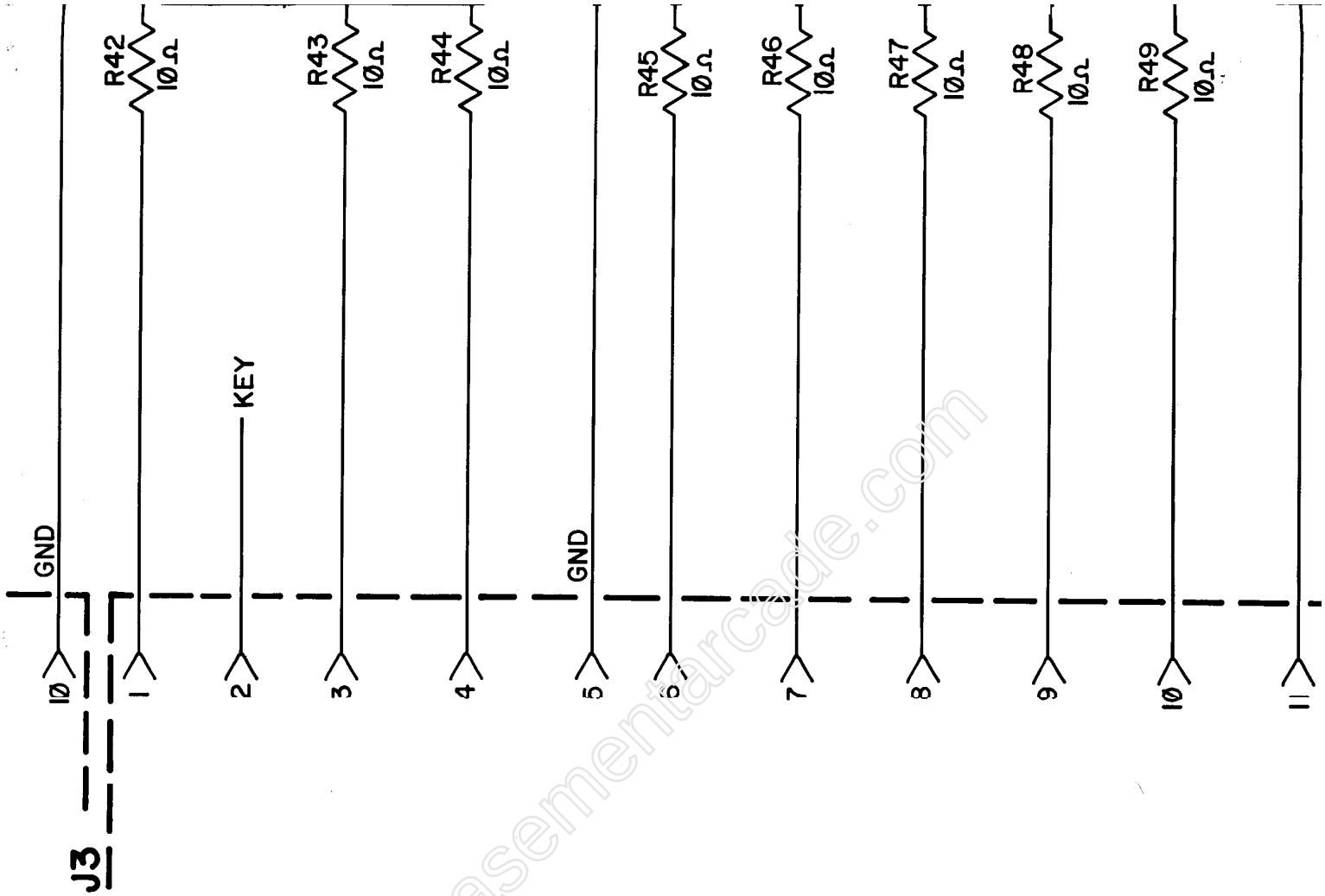

www.basementarcade.com

BASEMENT ARCADE CLASSICS
www.basementarcade.com

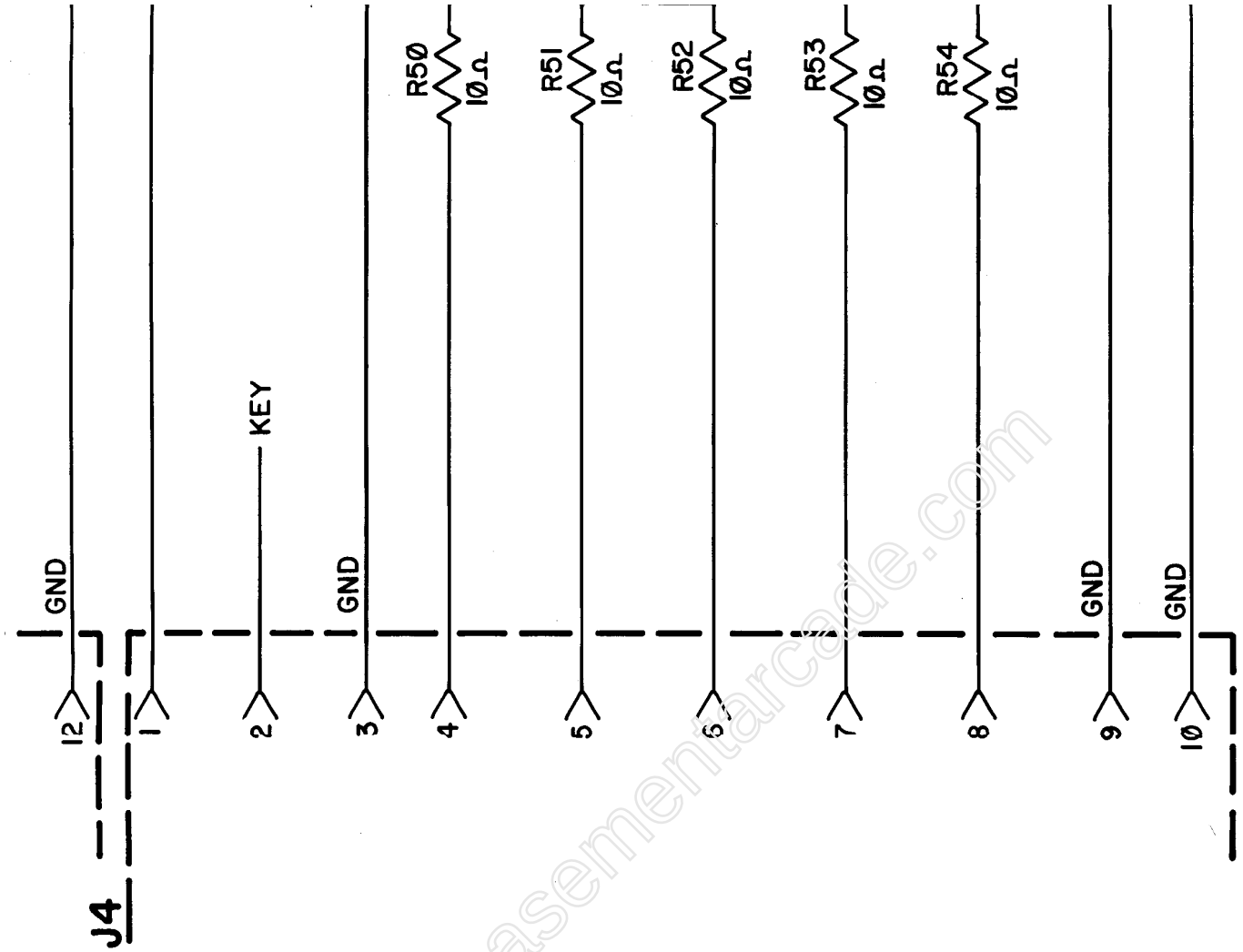

www.basementarcade.com

12D-788-S SH 1 OF 1

3

2

1

STERN®

SCHEMATIC, RESISTOR CAPACITOR RESISTOR P.C. BOARD 12D-788-S

C B A

BASEMENT ARCADE CLASSICS
www.basementarcade.com

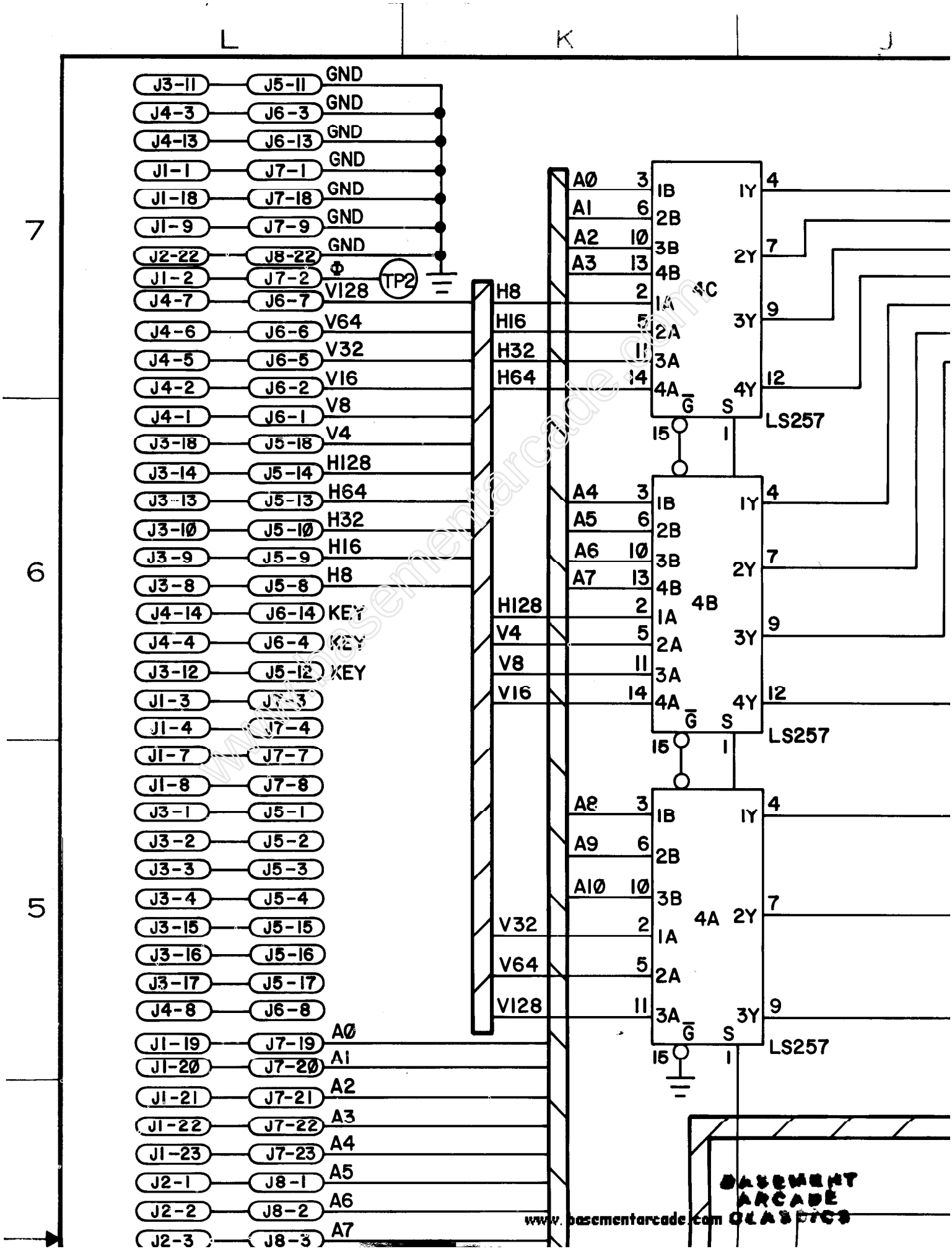
L
K
J
7
6
5
J3-11 J5-11 GND
J4-3 J6-3 GND
J4-13 J6-13 GND
J1-1 J7-1 GND
J1-18 J7-18 GND
J1-9 J7-9 GND
J2-22 J8-22 GND
J1-2 J7-2 Φ
J4-7 J6-7 V128
J4-6 J6-6 V64
J4-5 J6-5 V32
J4-2 J6-2 V16
J4-1 J6-1 V8
J3-18 J5-18 V4
J3-14 J5-14 H128
J3-13 J5-13 H64
J3-10 J5-10 H32
J3-9 J5-9 H16
J3-8 J5-8 H8
J4-14 J6-14 KEY
J4-4 J6-4 KEY
J3-12 J5-12 KEY
J1-3 J7-3
J1-4 J7-4
J1-7 J7-7
J1-8 J7-8
J3-1 J5-1
J3-2 J5-2
J3-3 J5-3
J3-4 J5-4
J3-15 J5-15
J3-16 J5-16
J3-17 J5-17
J4-8 J6-8
J1-19 J7-19 A0
J1-20 J7-20 A1
J1-21 J7-21 A2
J1-22 J7-22 A3
J1-23 J7-23 A4
J2-1 J8-1 A5
J2-2 J8-2 A6
J2-3 J8-3 A7
TP2
H8
H16
H32
H64
H128
V4
V8
V16
V32
V64
V128
A0 3 1B 1Y 4
A1 6 2B
A2 10 3B 2Y 7
A3 13 4B
2 1A 4C
5 2A 3Y 9
11 3A
14 4A 4Y 12
G S
15 1
LS257
A4 3 1B 1Y 4
A5 6 2B
A6 10 3B 2Y 7
A7 13 4B
2 1A 4B
5 2A 3Y 9
11 3A
14 4A 4Y 12
G S
15 1
LS257
A8 3 1B 1Y 4
A9 6 2B
A10 10 3B 2Y 7
2 1A 4A
5 2A
11 3A 3Y 9
G S
15 1
LS257
BASEMENT ARCADE CLASSICS
www.basementarcade.com

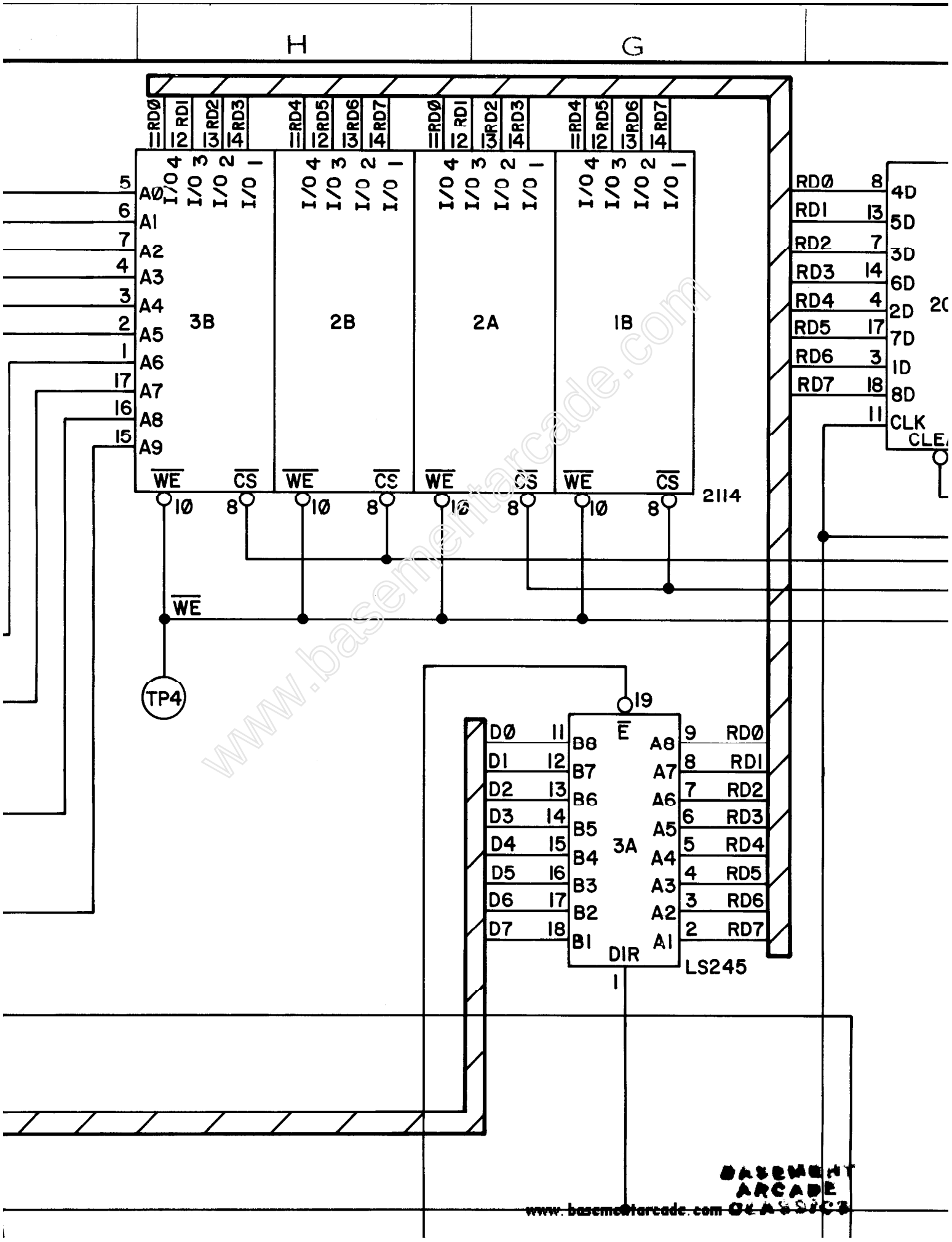

www.basementarcade.com
BASEMENT ARCADE CLASSICS

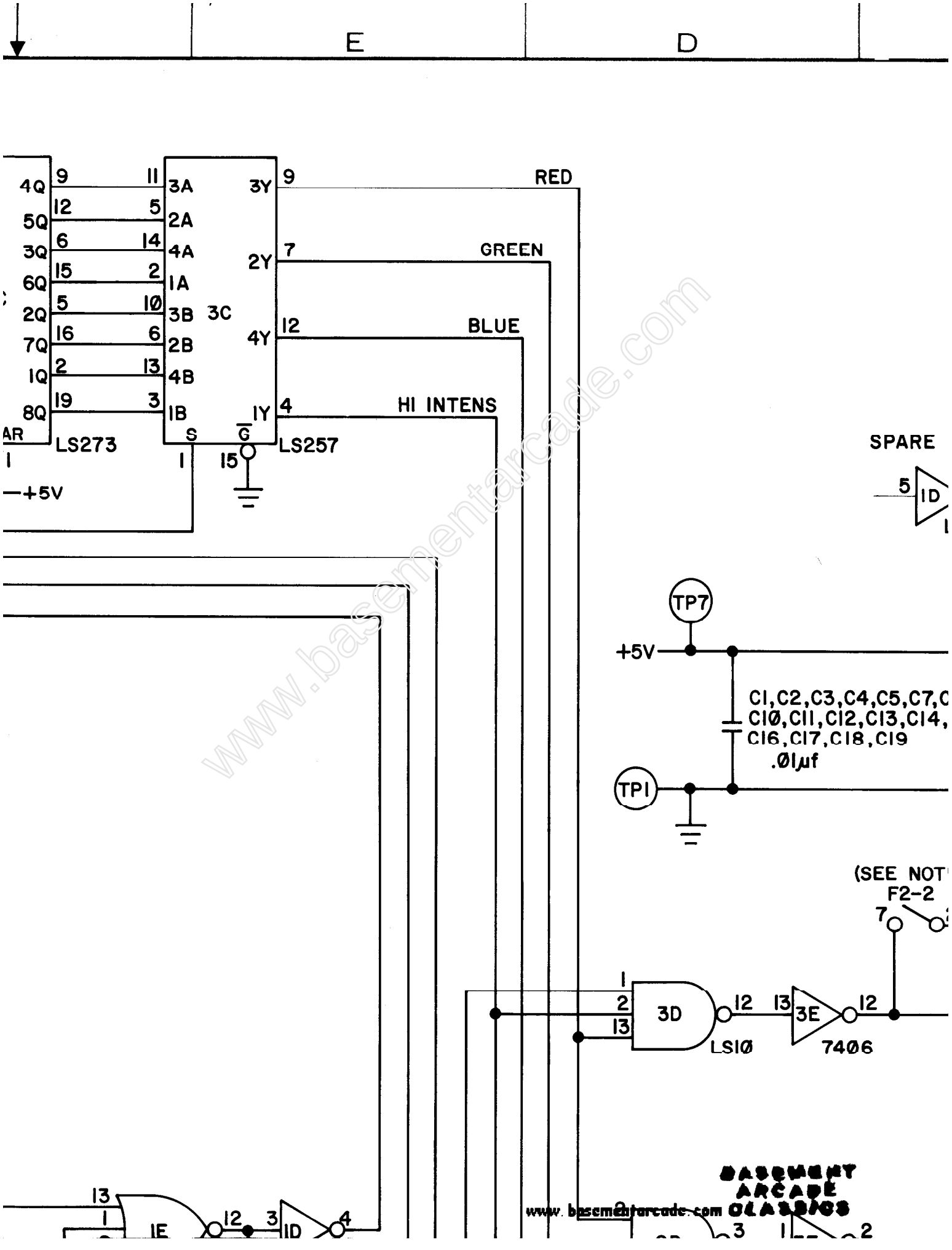
E
D
4Q
5Q
3Q
6Q
2Q
7Q
1Q
8Q
9
12
6
15
5
16
2
19
11
5
14
2
10
6
13
3
3A
2A
4A
1A
3B
2B
4B
1B
3C
LS273
S
G
LS257
3Y
2Y
4Y
1Y
RED
GREEN
BLUE
HI INTENS
+5V
SPARE
TP7
TP1
+5V
C1,C2,C3,C4,C5,C7,C
C10,C11,C12,C13,C14,
C16,C17,C18,C19
.01µf
(SEE NOT
F2-2
3D
LS10
3E
7406
1E
1D
www.basementarcade.com

C B A

REVISIONS				
SYM	DESCRIPTION	DFT / DATE	CHK / DATE	APPD / DATE
B	TO COMPLETE PRODUCTION SCHEMATIC E.I. 00433	[illegible]	[illegible]	[illegible]

7

ATES

6

04

6

+5V J9-2

,C9,
15,

C6
22µf
16V

GND J9-1

R19 360Ω

R16 270Ω +5V

5

R13
750Ω

RED

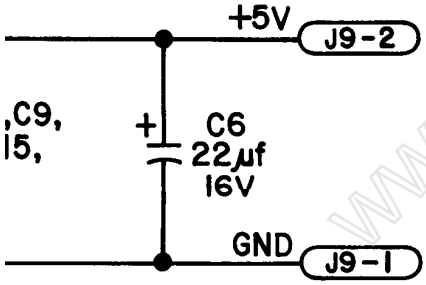

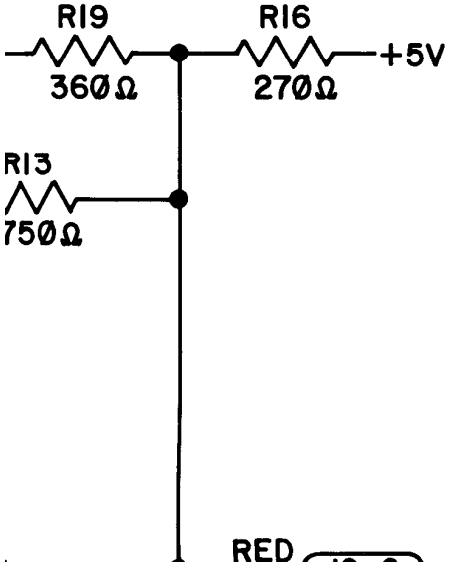

www.basementarcade.com

BASEMENT ARCADE CLASSICS
www.basementarcade.com

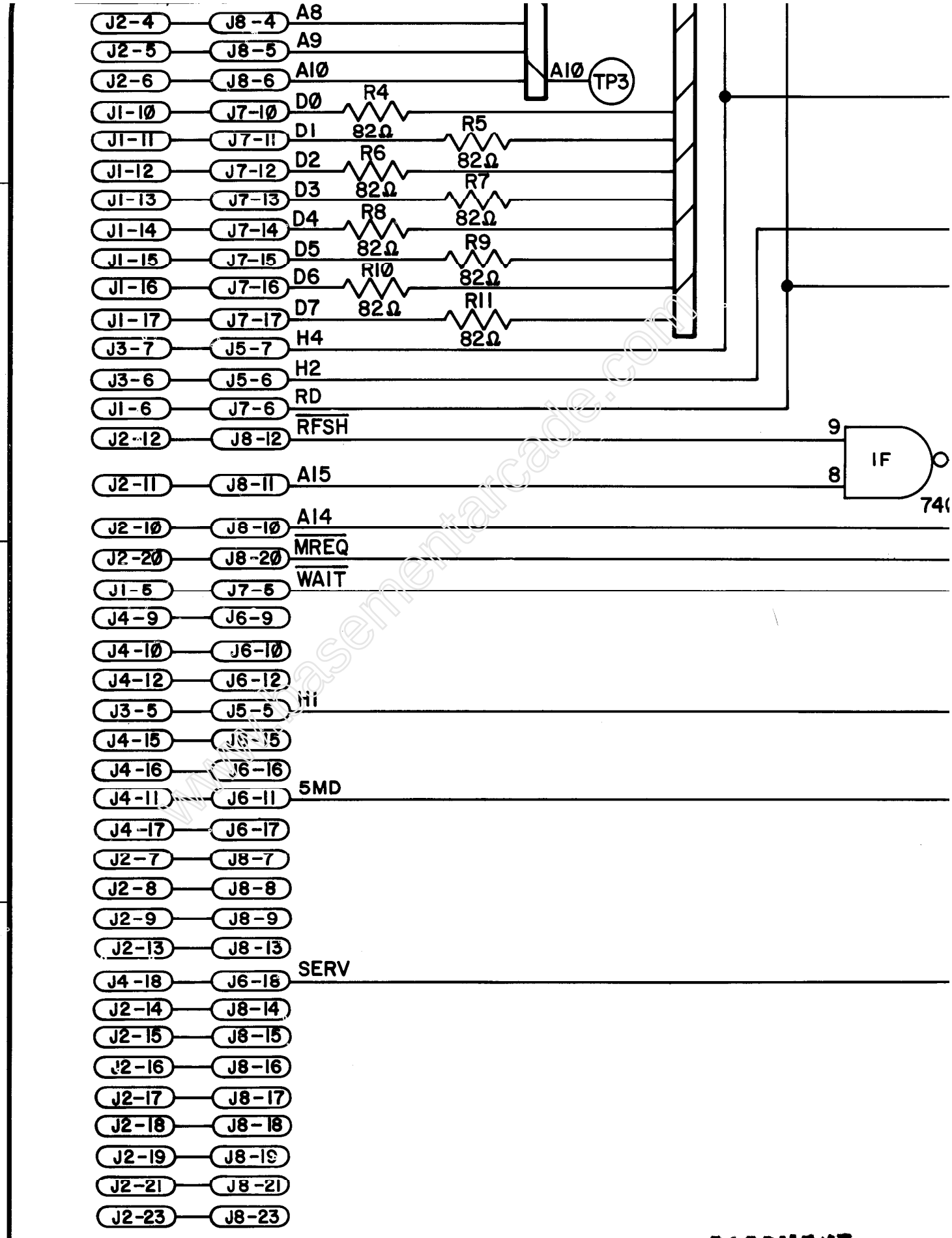
J2-4 J8-4 A8
J2-5 J8-5 A9
J2-6 J8-6 A10
A10 TP3
J1-10 J7-10 D0 R4 82Ω
J1-11 J7-11 D1 R5 82Ω
J1-12 J7-12 D2 R6 82Ω
J1-13 J7-13 D3 R7 82Ω
J1-14 J7-14 D4 R8 82Ω
J1-15 J7-15 D5 R9 82Ω
J1-16 J7-16 D6 R10 82Ω
J1-17 J7-17 D7 R11 82Ω
J3-7 J5-7 H4
J3-6 J5-6 H2
J1-6 J7-6 RD
J2-12 J8-12 RFSH
J2-11 J8-11 A15
9
8
IF
74(
J2-10 J8-10 A14
J2-20 J8-20 MREQ
J1-5 J7-5 WAIT
J4-9 J6-9
J4-10 J6-10
J4-12 J6-12
J3-5 J5-5 Hi
J4-15 J6-15
J4-16 J6-16
J4-11 J6-11 5MD
J4-17 J6-17
J2-7 J8-7
J2-8 J8-8
J2-9 J8-9
J2-13 J8-13
J4-18 J6-18 SERV
J2-14 J8-14
J2-15 J8-15
J2-16 J8-16
J2-17 J8-17
J2-18 J8-18
J2-19 J8-19
J2-21 J8-21
J2-23 J8-23
3
2
1
L
J
BASEMENT ARCADE CLASSICS
www.basementarcade.com

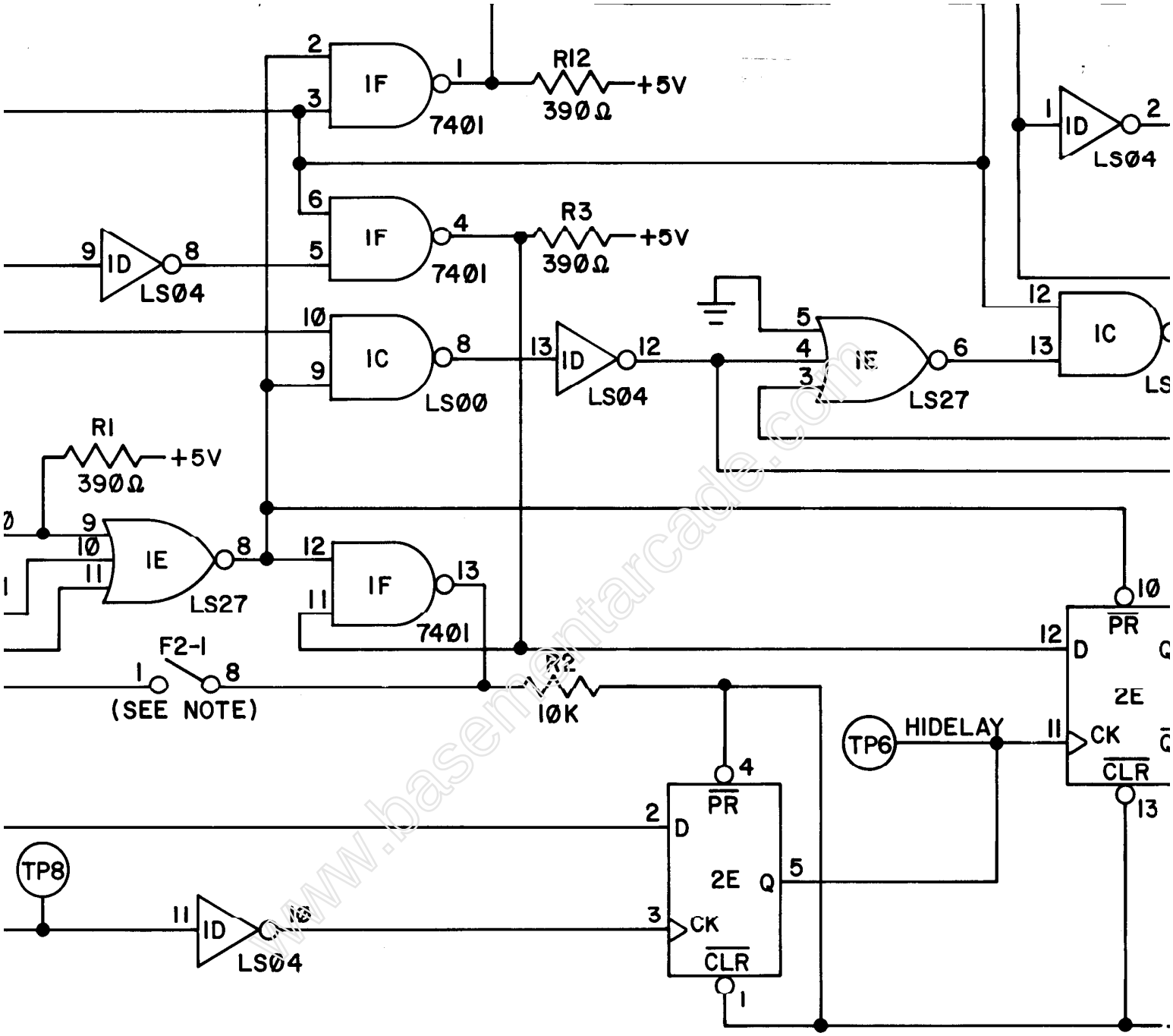

www.basementarcade.com

BASEMENT ARCADE CLASSICS
www.basementarcade.com

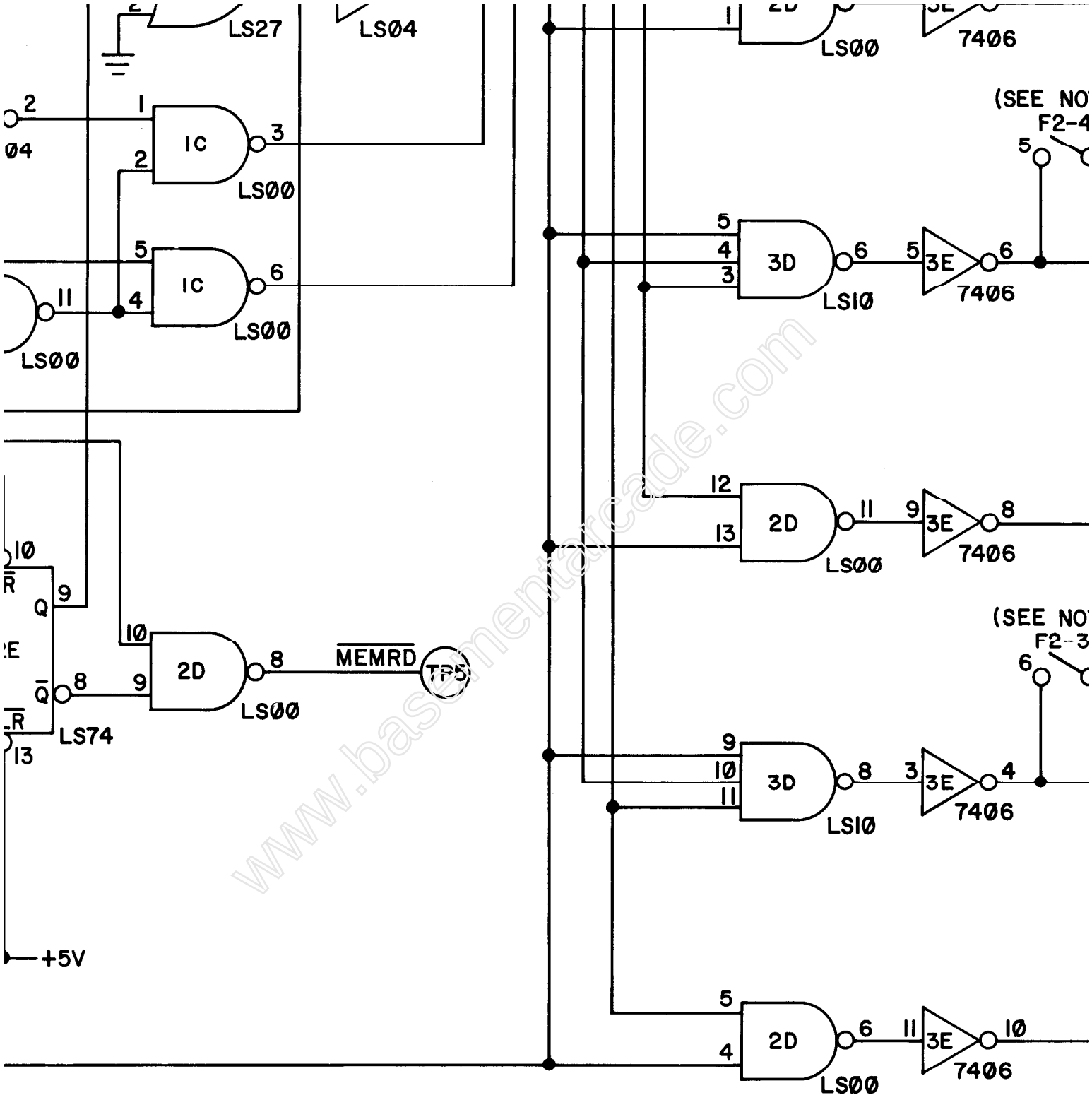

www.basementarcade.com

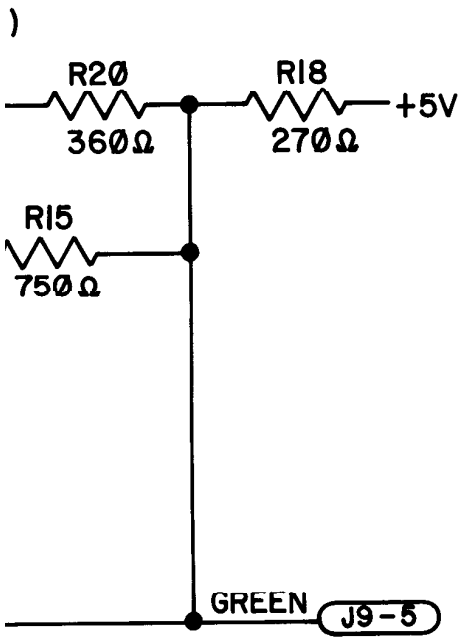

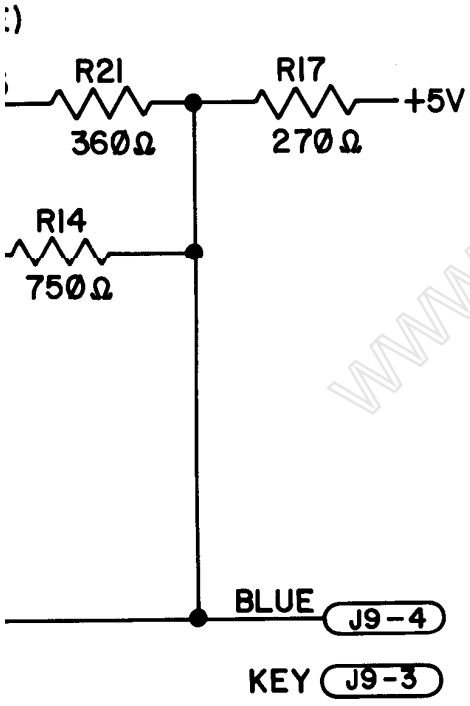

NOTES:

1. DIP SWITCHES F2-2, F2-3, & F2-4 SHOULD BE OPEN WHEN USING WELLS GARDNER MONITOR, CLOSED FOR ELECTROHOME MONITOR.
2. FOR NORMAL OPERATION SWITCH F2-1 SHOULD BE CLOSED.

I.C. TYPE	+5V	GND
	PIN NO.	
LS273	20	10
LS257	16	8
LS245	20	10
LS74	14	7
LS27	14	7
LS10	14	7
LS04	14	7
LS00	14	7
7406	14	7
7401	14	7
2114	18	9

STERN®

SCHEMATIC, BUFFER SYSTEM COLOR P.C. BOARD 12D-766-S

12D-766-S

SH 1 OF 1

www.basementarcade.com

BASEMENT ARCADE CLASSICS

www.basementarcade.com

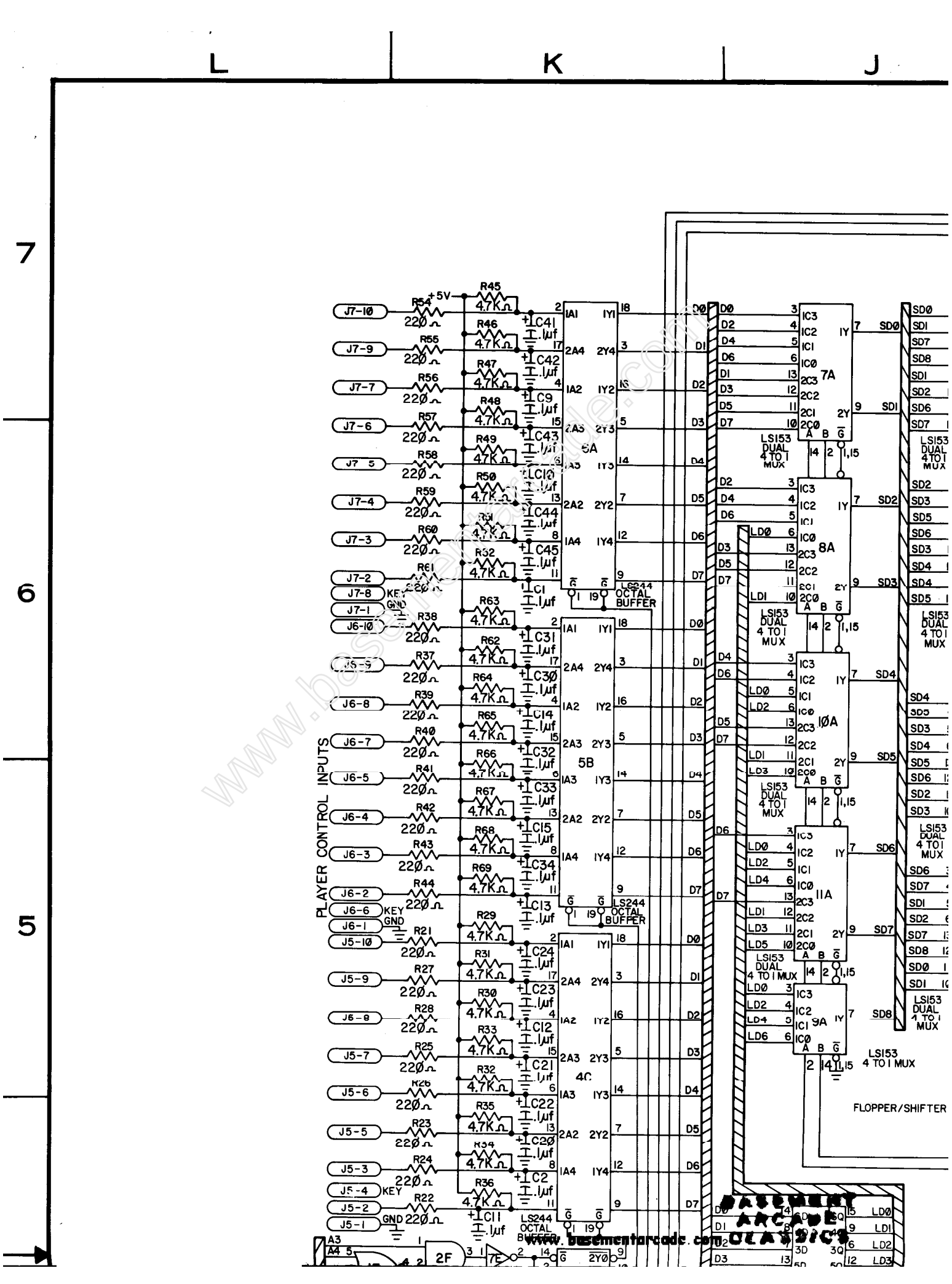
L
K
J
7
6
5
PLAYER CONTROL INPUTS
J7-10
J7-9
J7-7
J7-6
J7-5
J7-4
J7-3
J7-2
J7-8
J7-1
J6-10
J6-9
J6-8
J6-7
J6-5
J6-4
J6-3
J6-2
J6-6
J6-1
J5-10
J5-9
J6-8
J5-7
J5-6
J5-5
J5-3
J5-4
J5-2
J5-1
KEY
GND
+5V
R45
R54
R55
R56
R57
R58
R59
R60
R61
R38
R37
R39
R40
R41
R42
R43
R44
R29
R21
R31
R27
R30
R28
R33
R25
R32
R26
R35
R23
R34
R24
R36
R22
4.7KΩ
220Ω
C41
C42
C9
C43
C10
C44
C45
C1
C31
C30
C14
C32
C33
C15
C34
C13
C24
C23
C12
C21
C22
C20
C2
C11
.1µf
LS244
OCTAL
BUFFER
5A
5B
4C
2F
7E
7A
8A
10A
11A
9A
LSI53
DUAL
4 TO 1
MUX
4 TO 1 MUX
FLOPPER/SHIFTER
SD0
SD1
SD2
SD3
SD4
SD5
SD6
SD7
SD8
LD0
LD1
LD2
LD3
LD4
LD5
LD6
D0
D1
D2
D3
D4
D5
D6
D7
www.basementarcade.com

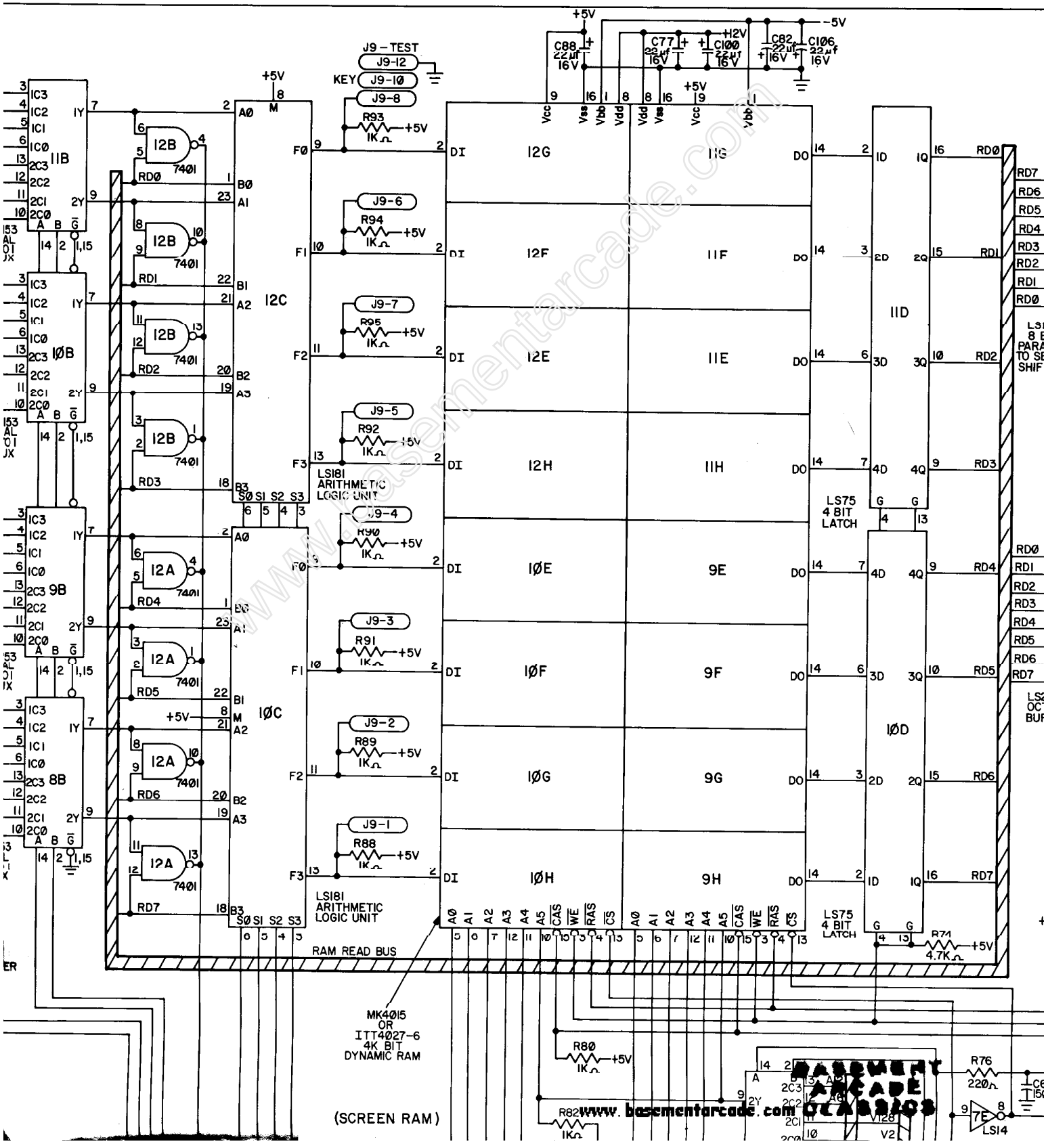

www.basementarcade.com

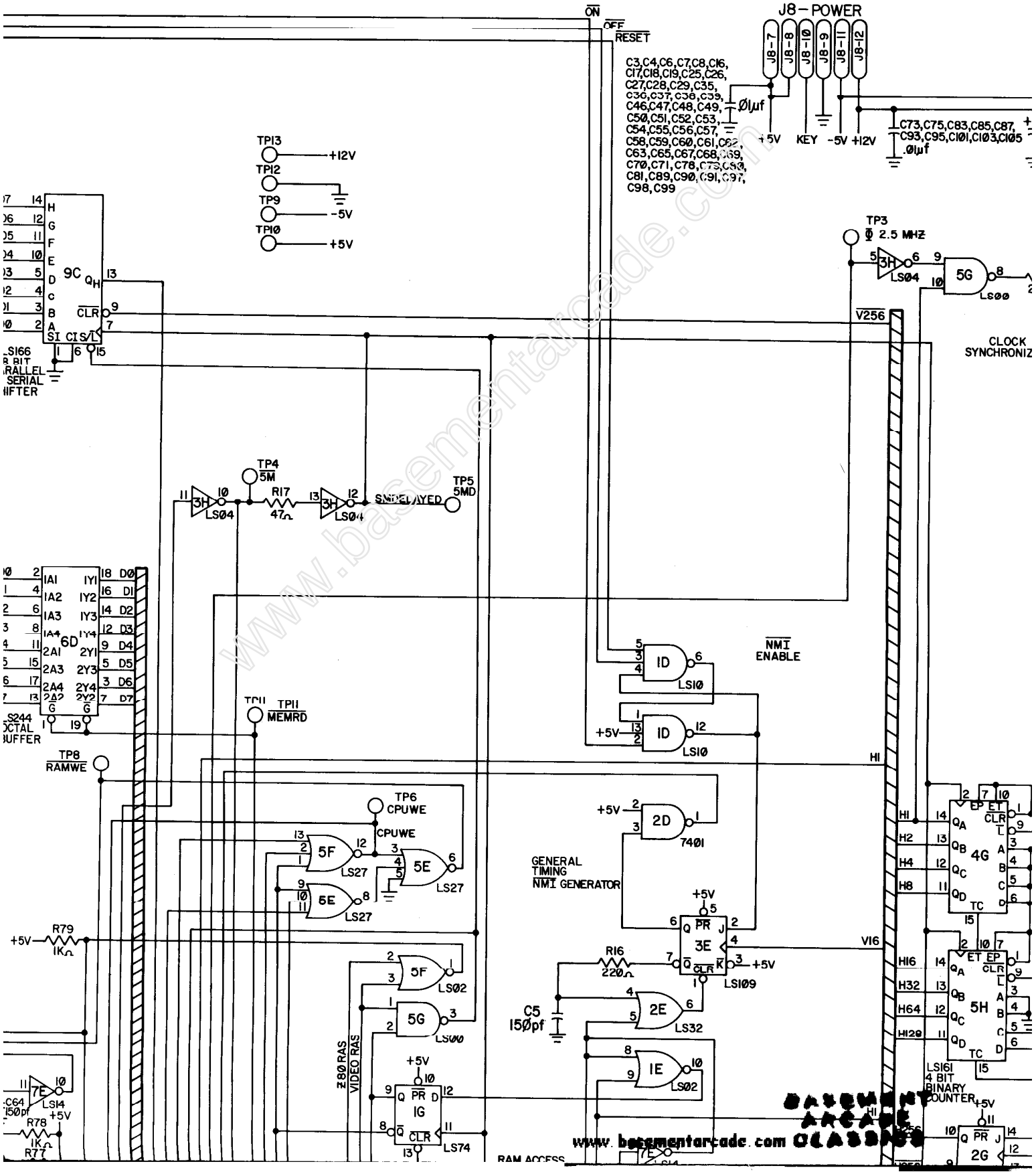

www.basementarcade.com

C B A

REVISIONS				
SYM	DESCRIPTION	DFT DATE	CHK DATE	APPD DATE
A	ISSUED EI 00324	TW 8/19/80		
B	DRAFTING ERROR E.I. 00390	TW 9/29/80		
C	ADDED MISSING INFORMATION E.I. 00441	TW 10/14/80	10/17/80	

7

C66 470µf 16V

C72,C74,C76, C84,C86, C92,C94,C96, C102,C104 .01µf

R71 220Ω

FR

6

+5V

+5V

C40 150pf

LS161 4 BIT BINARY COUNTER

HORIZONTAL ADDRESS COUNTERS

5

1 3H 2 LS04

SPARE GATES

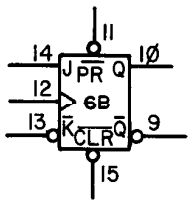

www.basementarcade.com

BASEMENT ARCADE CLASSICS

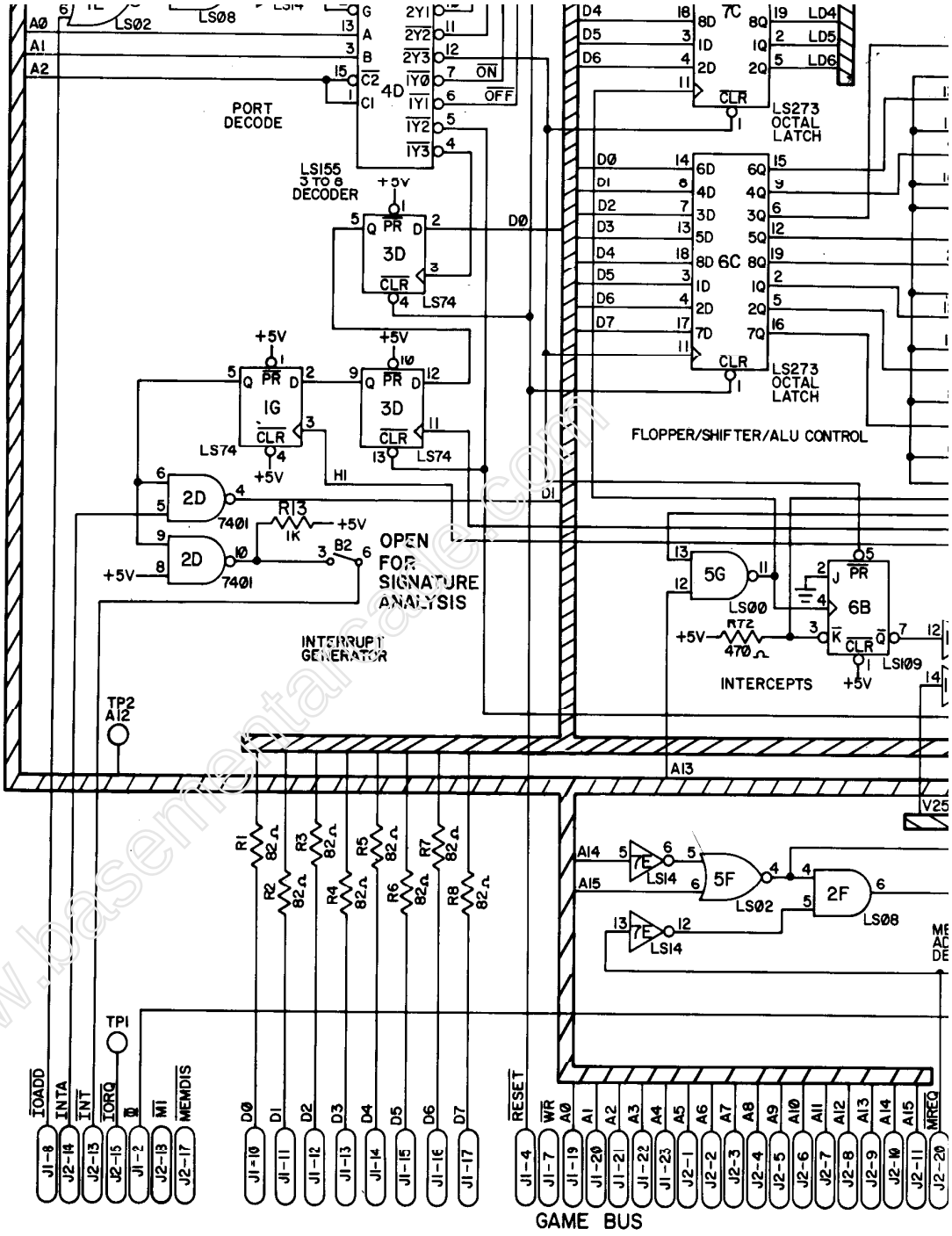

www.basementarcade.com

BASEMENT ARCADE CLASSICS
www.basementarcade.com

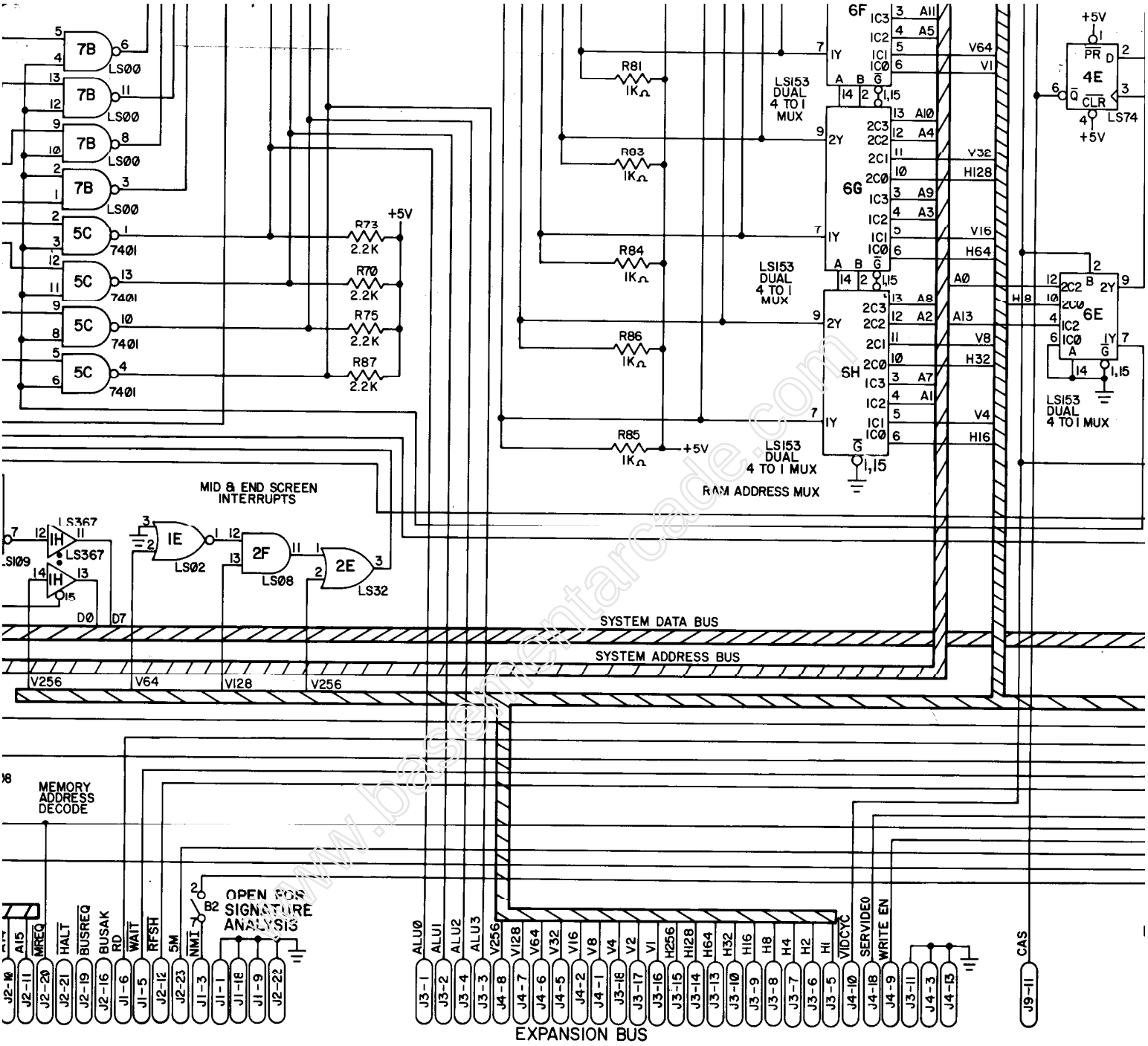

www.basementarcade.com

BASEMENT ARCADE www.basementarcade.com CLASSICS

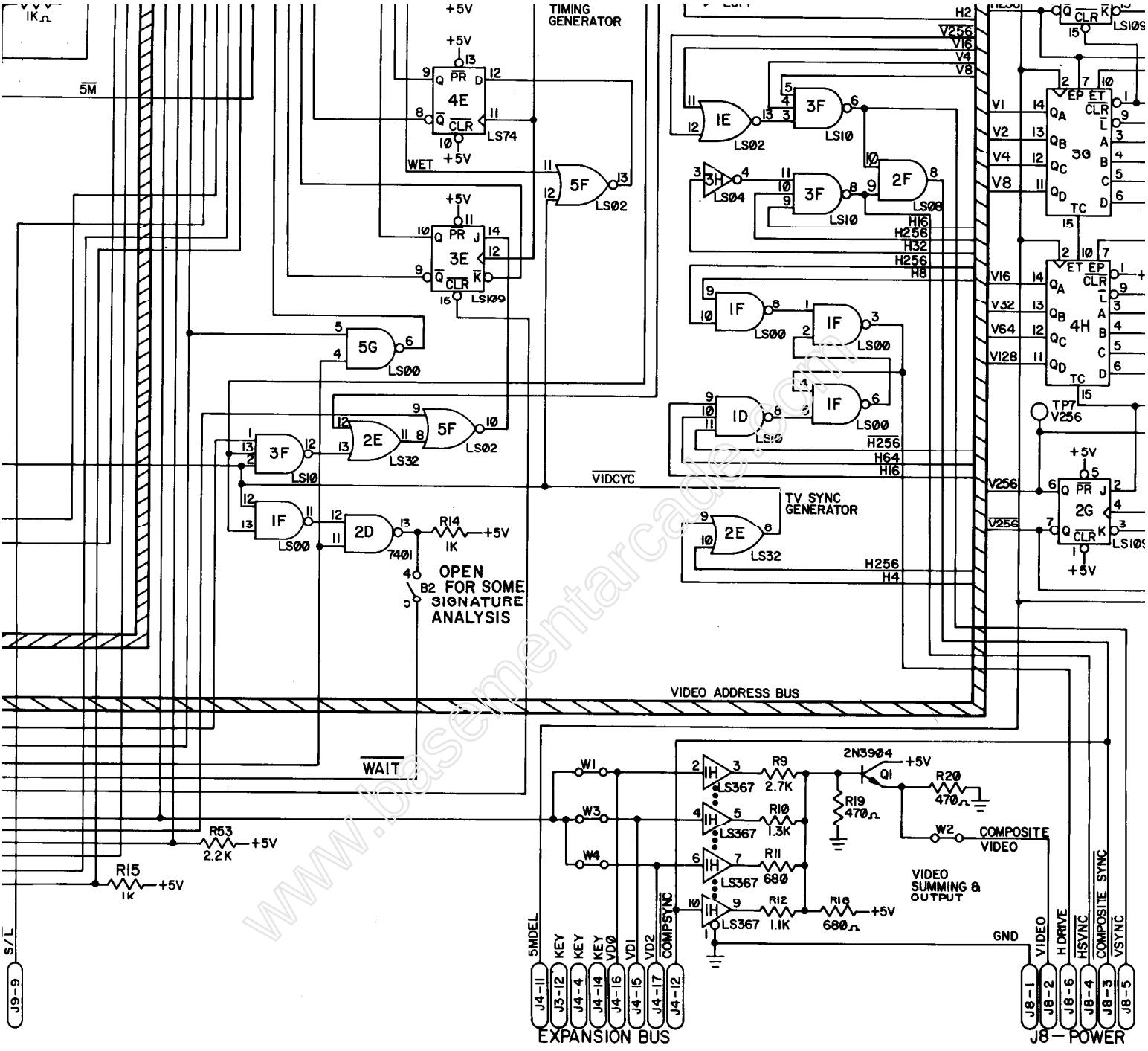

www.basementarcade.com

BASEMENT ARCADE CLASSICS

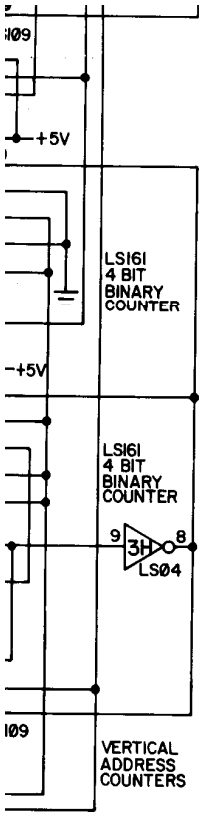

LS367	16	8		
LS273	20	10		
LS244	20	10		
LS181	24	12		
LS166	16	8		
LS161	16	8		
LS155	16	8		
LS153	16	8		
LS109	16	8		
LS75	5	12		
LS74	14	7		
LS32	14	7		
LS27	14	7		
LS14	14	7		
LS10	14	7		
LS08	14	7		
LS04	14	7		
LS02	14	7		
LS00	14	7		
7401	14	7		
4027-6/MK4015	9	16	8	1
I.C. TYPE	+5V	GND	+12V	-5V
	PIN NO.			

www.basementarcade.com

12D-660-S

3

2

1

STERN®

SCHEMATIC, VIDEO FRAME BUFFER P.C. BOARD

12D-660-S

BASEMENT ARCADE CLASSICS
www.basementarcade.com

C B A

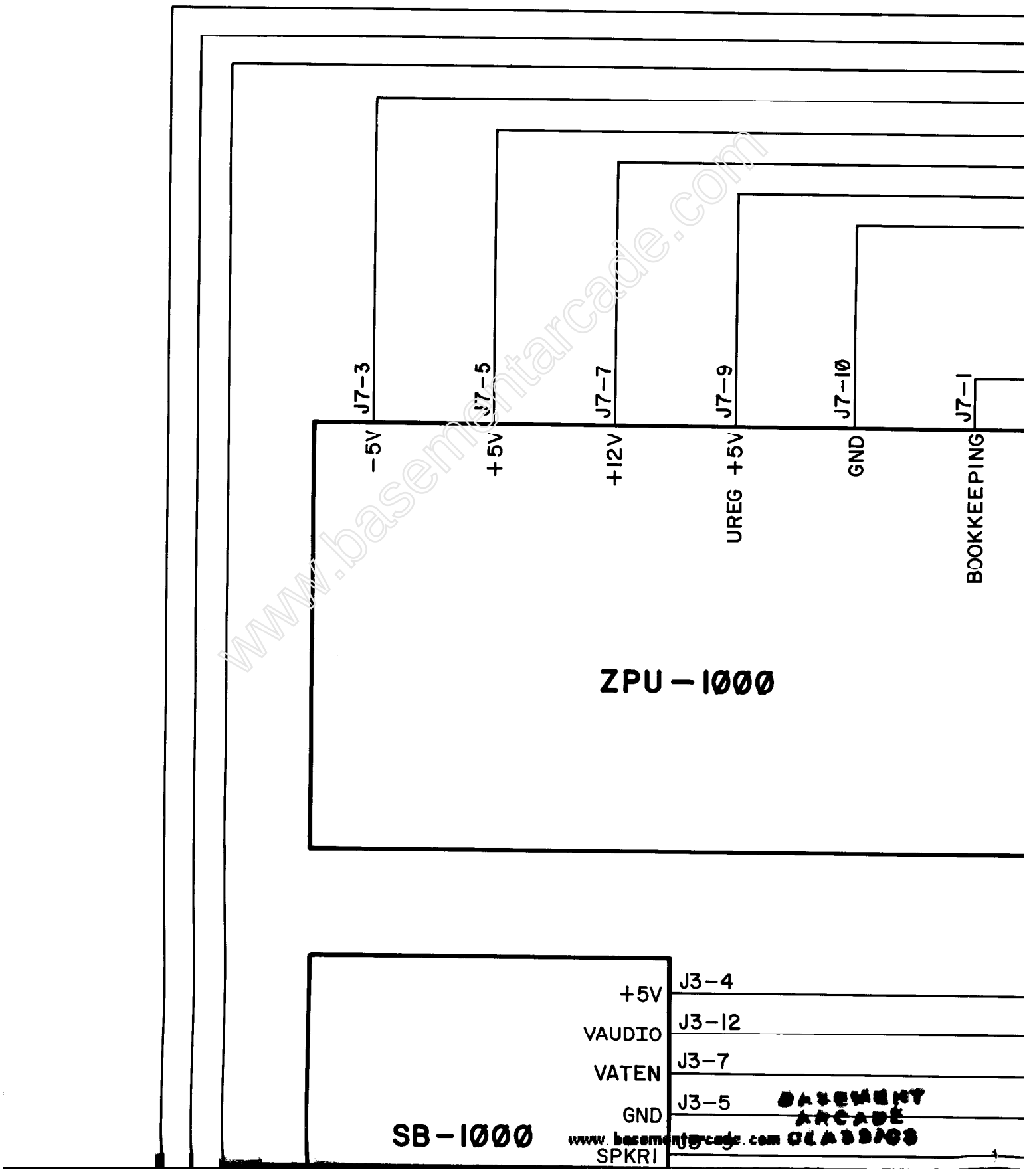

www.basementarcade.com

www.basementarcade.com

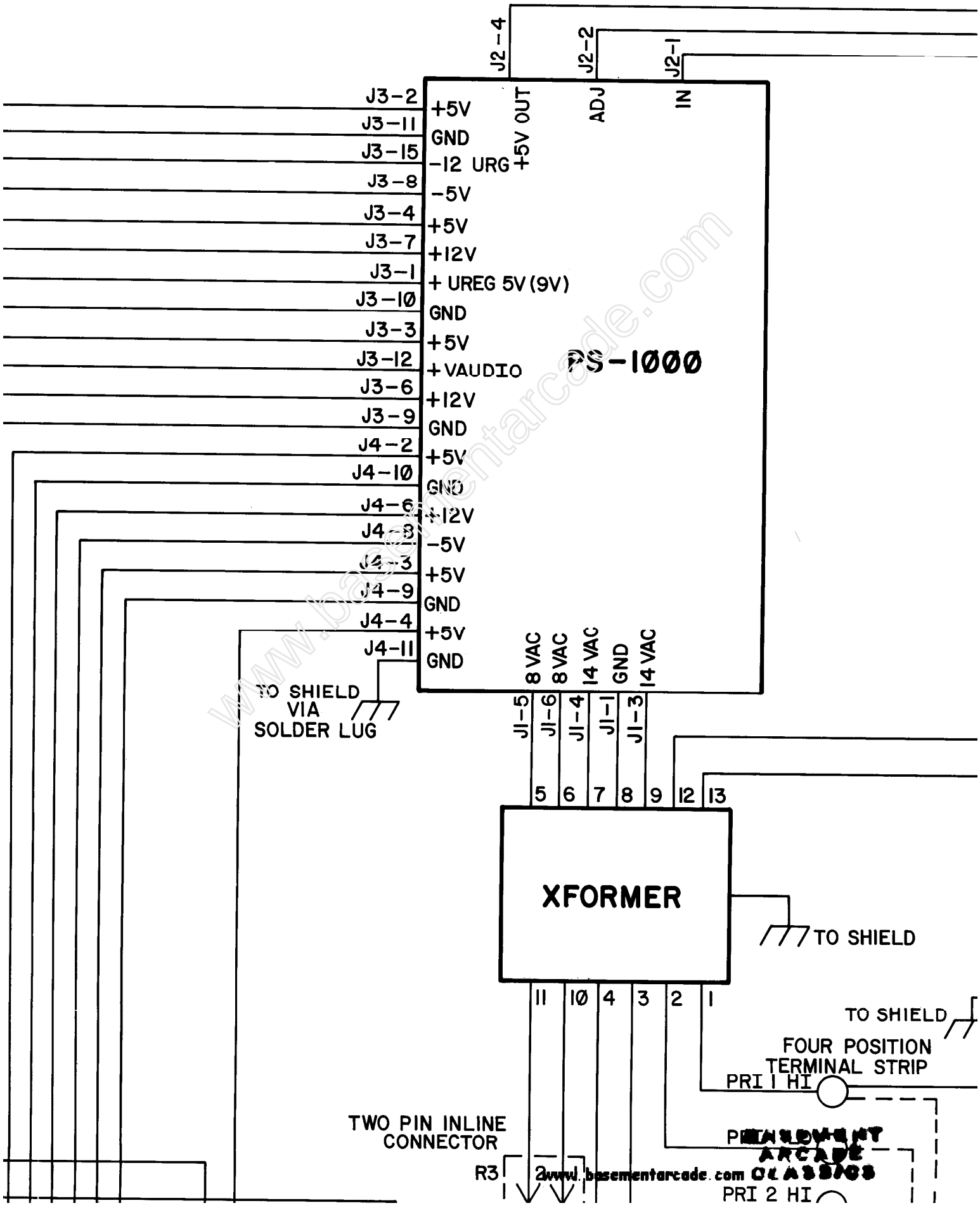

www.basementarcade.com

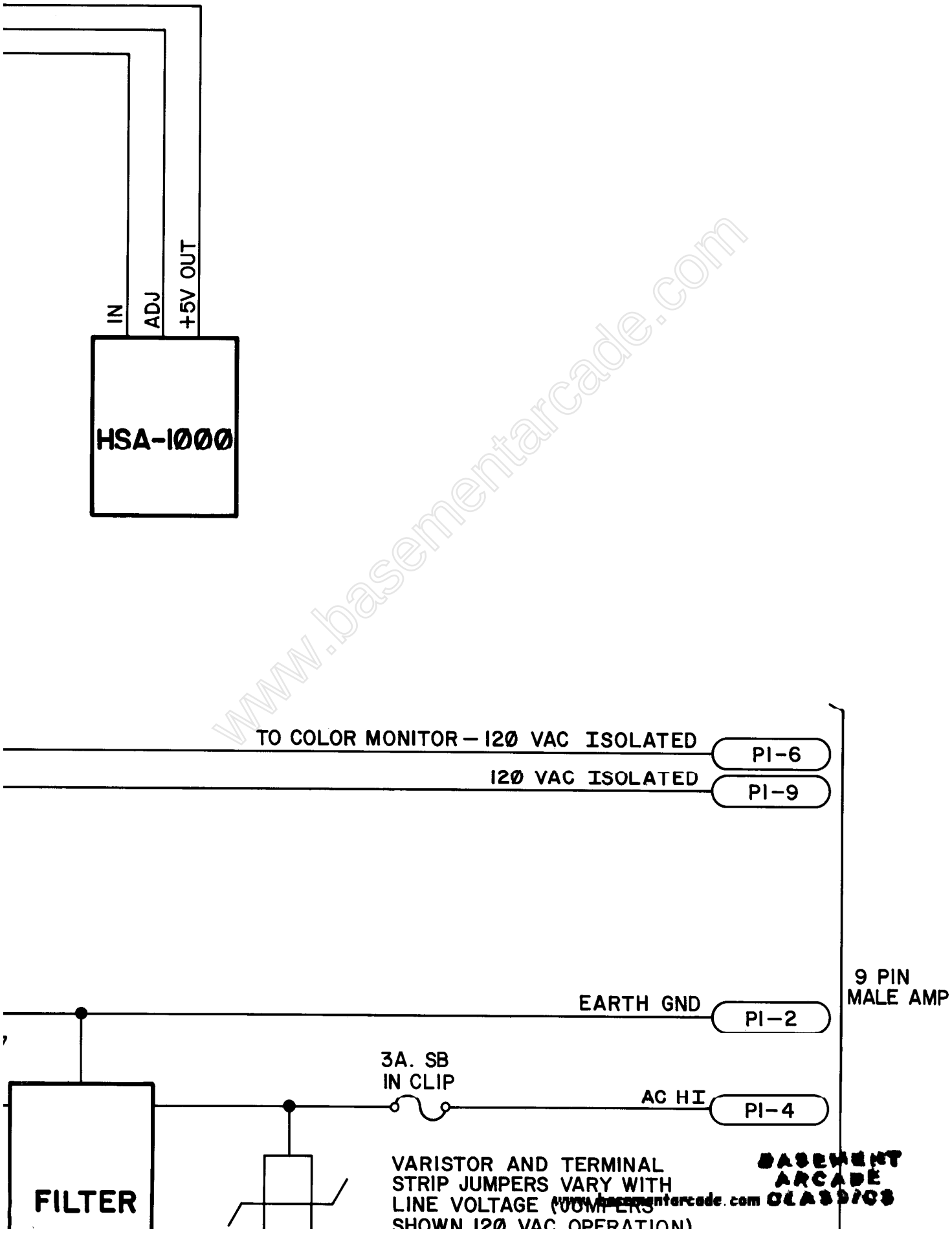

www.basementarcade.com

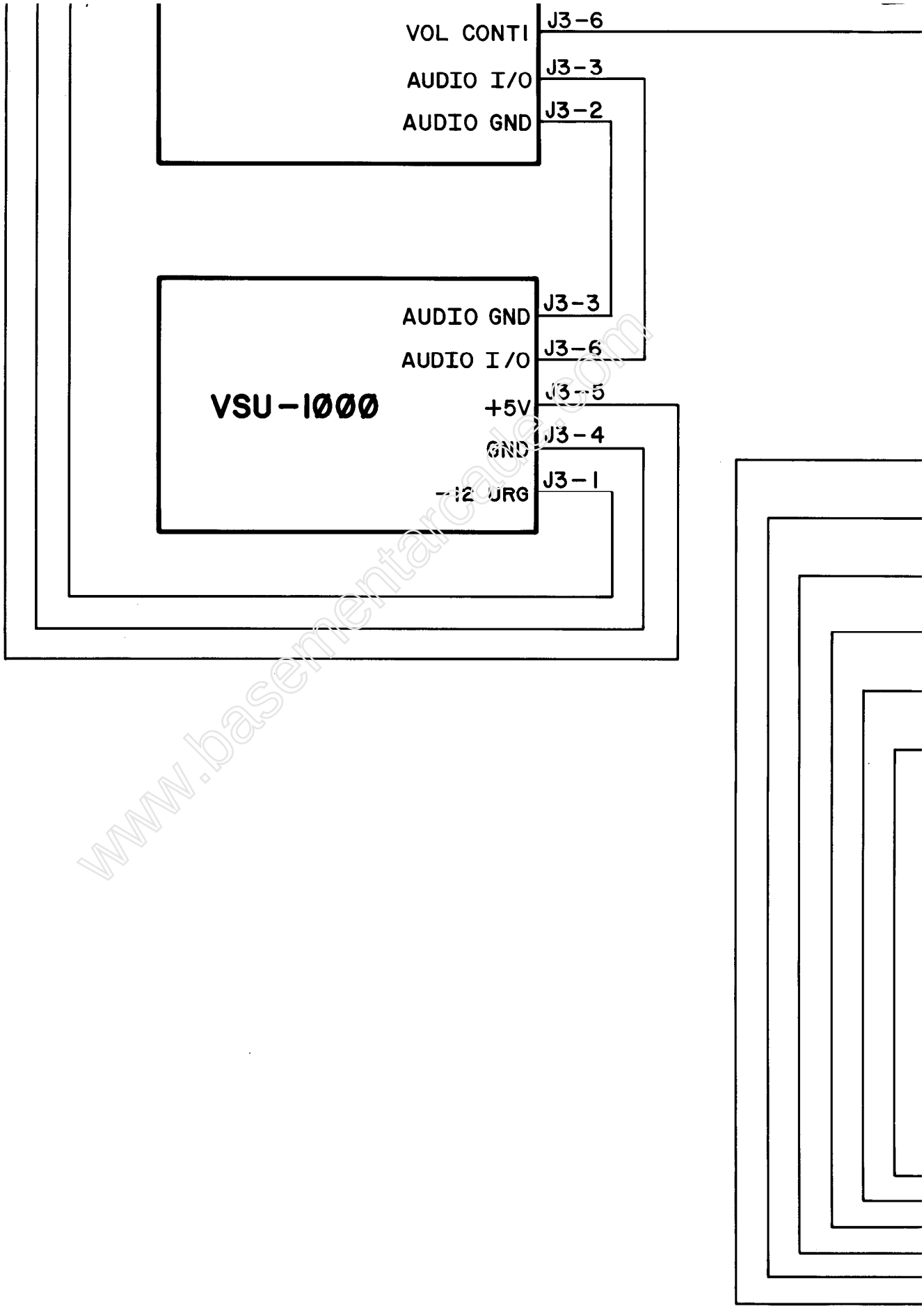

www.basementarcade.com

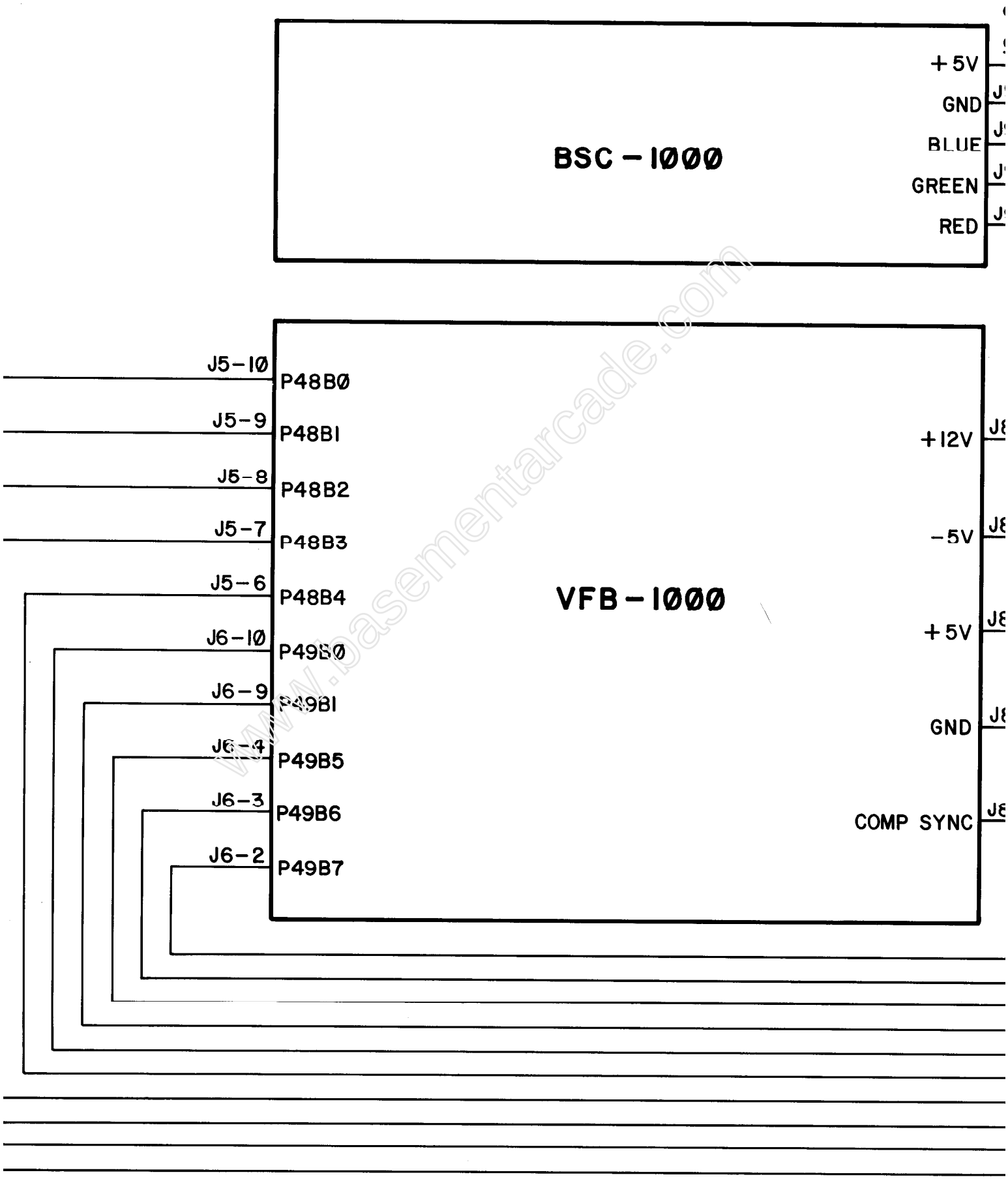

www.basementarcade.com
BASEMENT ARCADE CLASSICS

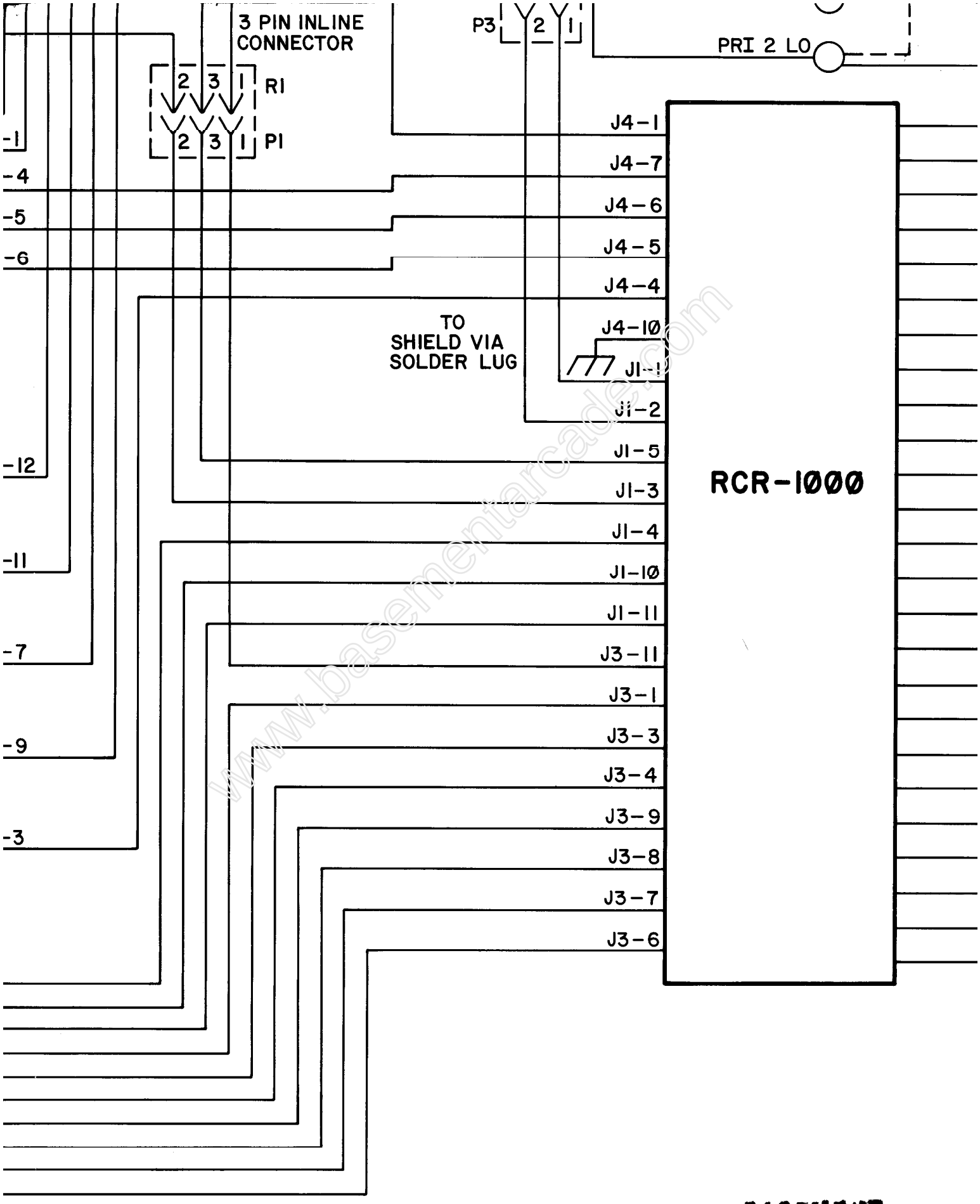

www.basementarcade.com

BASEMENT ARCADE CLASSICS
www.basementarcade.com

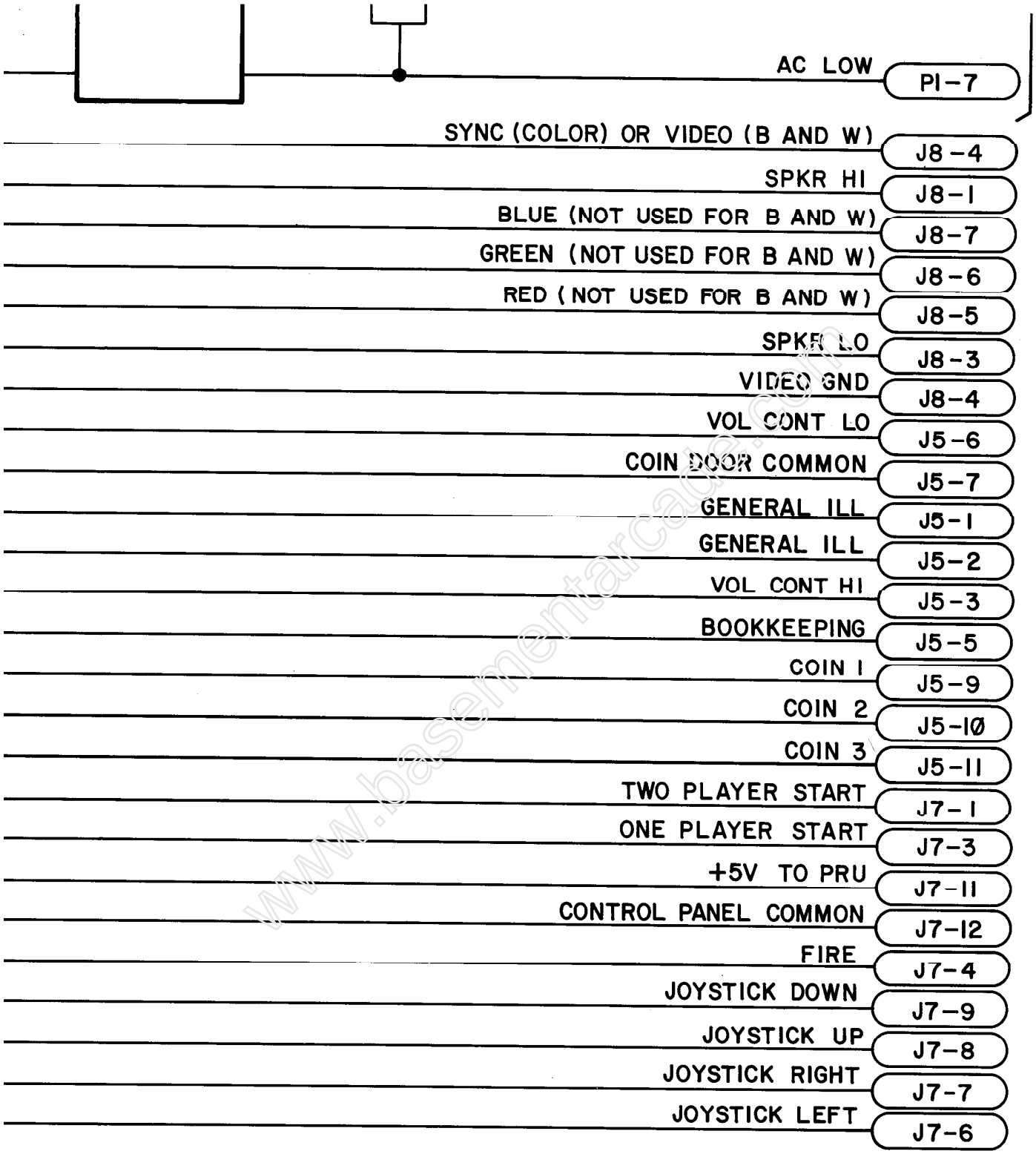

STERN®

COMPONENT DRAWER WIRING DIAGRAM

12D-809-S

www.basementarcade.com

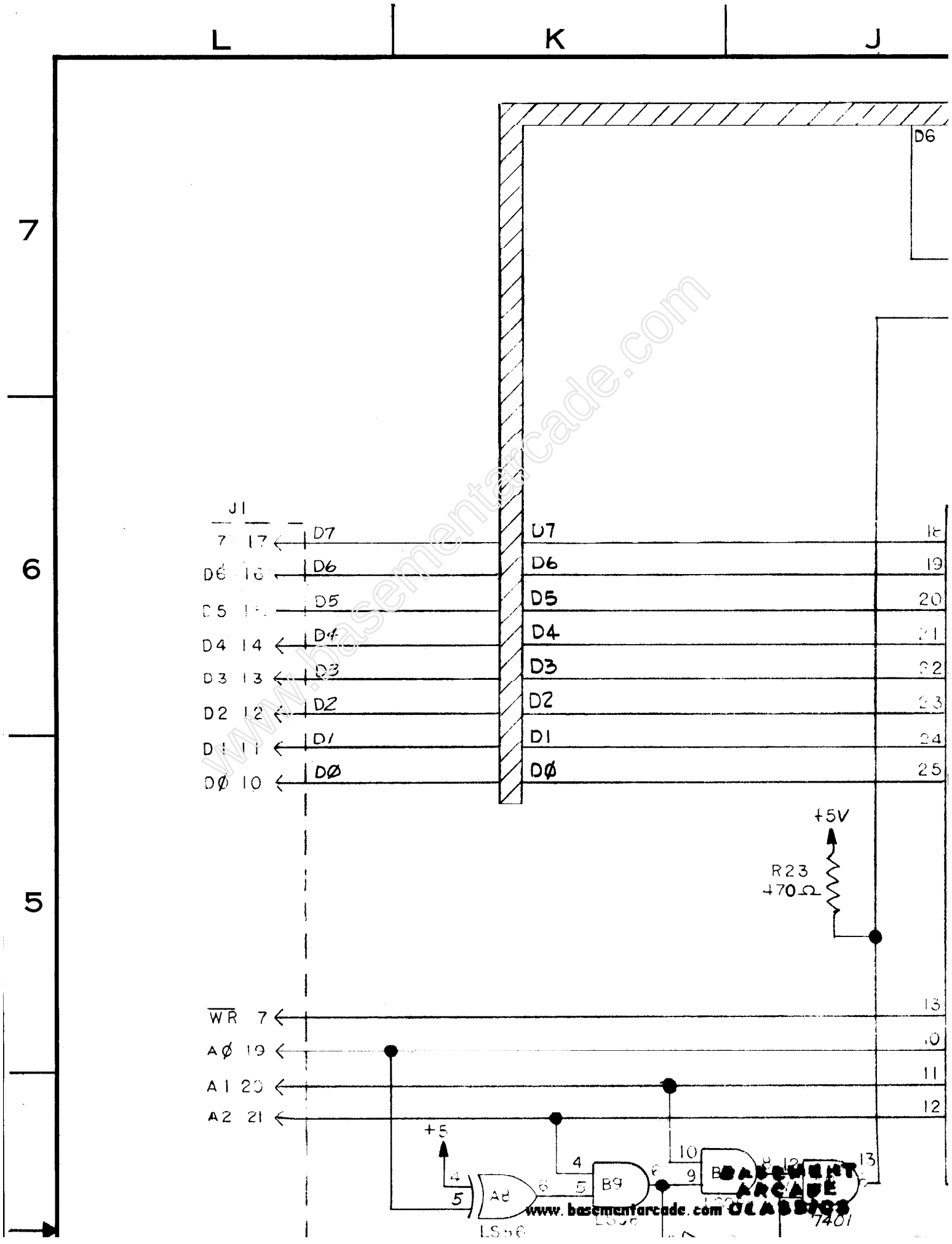
L
K
J
7
6
5
D6
J1
D7
D6
D5
D4
D3
D2
D1
DØ
U7
D6
D5
D4
D3
D2
D1
DØ
+5V
R23
470Ω
WR
AØ
A1
A2
+5
A8
B9
LS86
7401
www.basementarcade.com

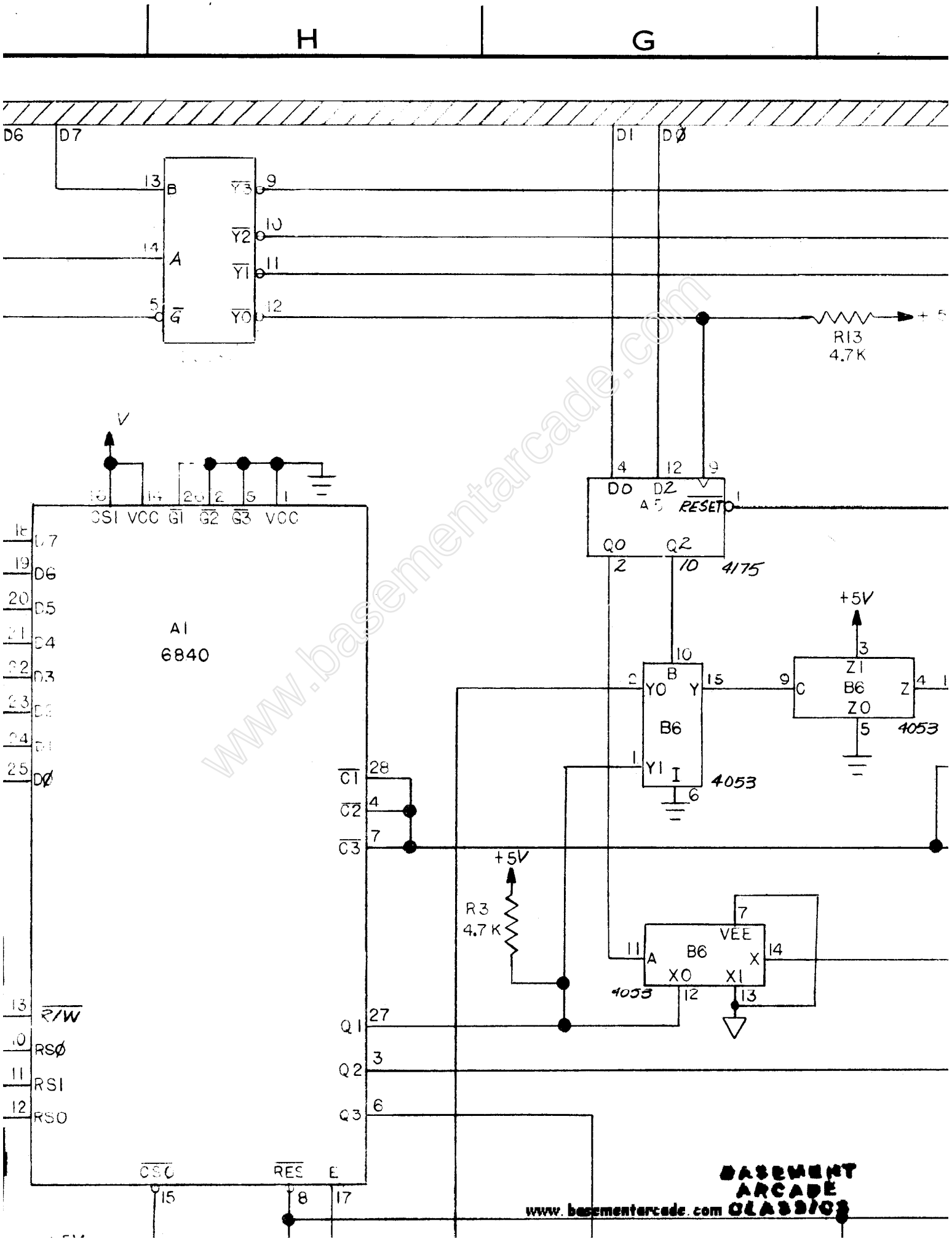
H
G
D6
D7
D1
DØ
B
A
G
Y3
Y2
Y1
Y0
R13
4.7K
V
CS1
VCC
G1
G2
G3
VCC
D7
D6
D5
D4
D3
D2
D1
DØ
A1
6840
C1
C2
C3
R/W
RSØ
RS1
RS0
Q1
Q2
Q3
CS0
RES
E
D0
D2
A5
RESET
Q0
Q2
4175
+5V
B
Y0
Y
B6
Y1
I
4053
Z1
B6
C
Z
Z0
4053
+5V
R3
4.7K
VEE
B6
A
X
X0
X1
4053
BASEMENT
ARCADE
CLASSICS
www.basementarcade.com

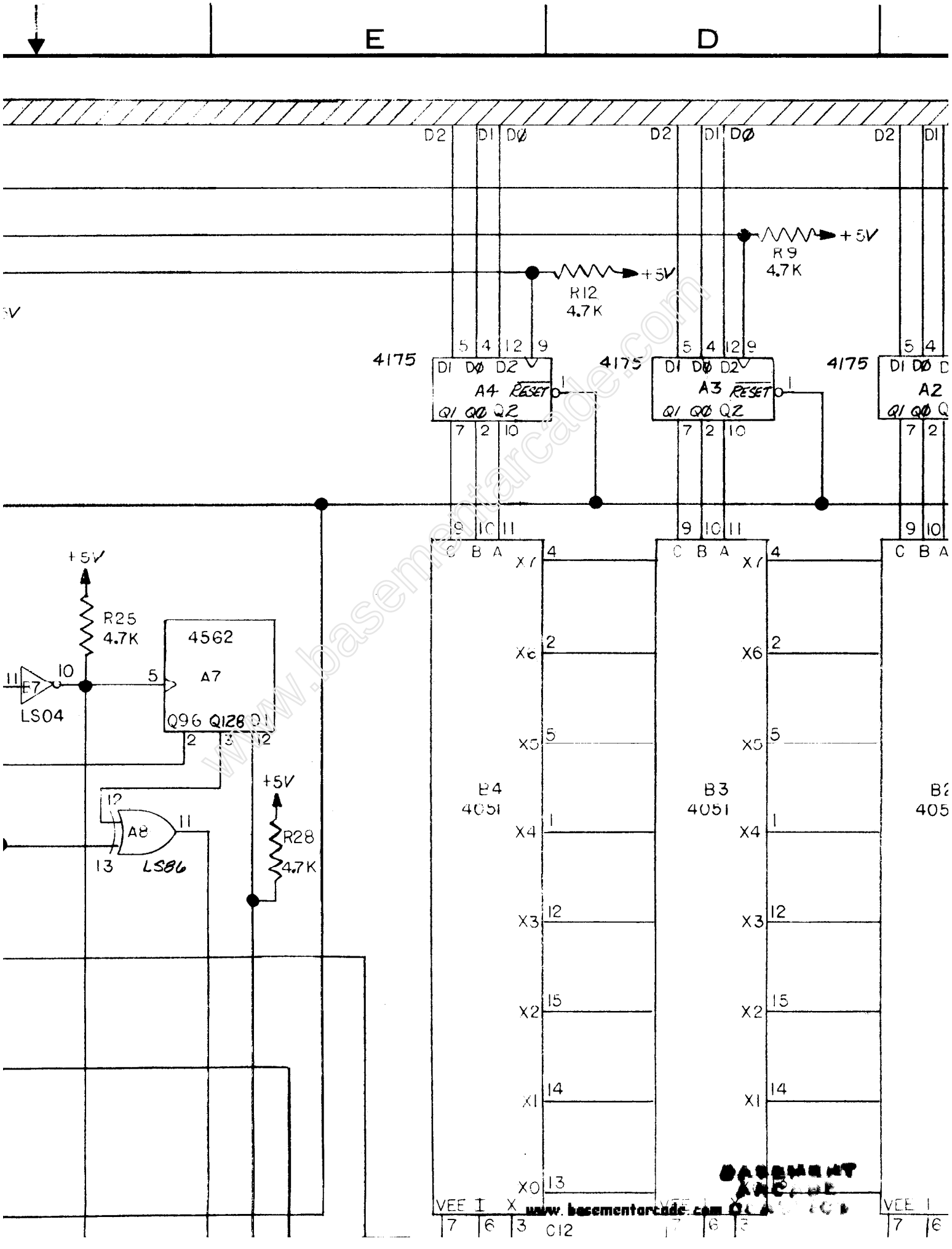
E
D
D2
D1
DØ
+5V
R12
4.7K
R9
4.7K
4175
A4
A3
A2
RESET
Q1 QØ Q2
+5V
R25
4.7K
4562
A7
Q96 Q128
LS04
A8
LS86
+5V
R28
4.7K
B4
4051
B3
4051
X7
X6
X5
X4
X3
X2
X1
X0
C B A
VEE
C12

C B A

REVISIONS				
SYM	DESCRIPTION	DFT. DATE	CHK. DATE	APPD. DATE
A	ISSUED. E.I. 00290	TH 8/2/80		

D0

+5V
R26
4.7 K

12 9
2V
RESET 1
2
10

11
+5V
X7 4
R14
270Ω
X6 2
R15
130Ω
X5 5
R17
68Ω
X4 1
R16
33Ω
X3 12
R18
16Ω
X2 15
R19
7.5Ω
X1 14
R1
3.9Ω
X0 13
R2
X
3

+5V
TP5
+5V
C35
4.7MFD
25V
4 +5V
5 GND
TP4
VAUDIO
12 VAUDIO
C33
.1MFD
10 KEY
C23
1000MFD
25V
9
TDA2002
C8
1
2
3
4
5
C24
470MFD
16V
R27
2.20Ω
R20
2.2Ω
SPEAKER
R24
C20

www.basementarcade.com
BASEMENT ARCADE CLASSICS

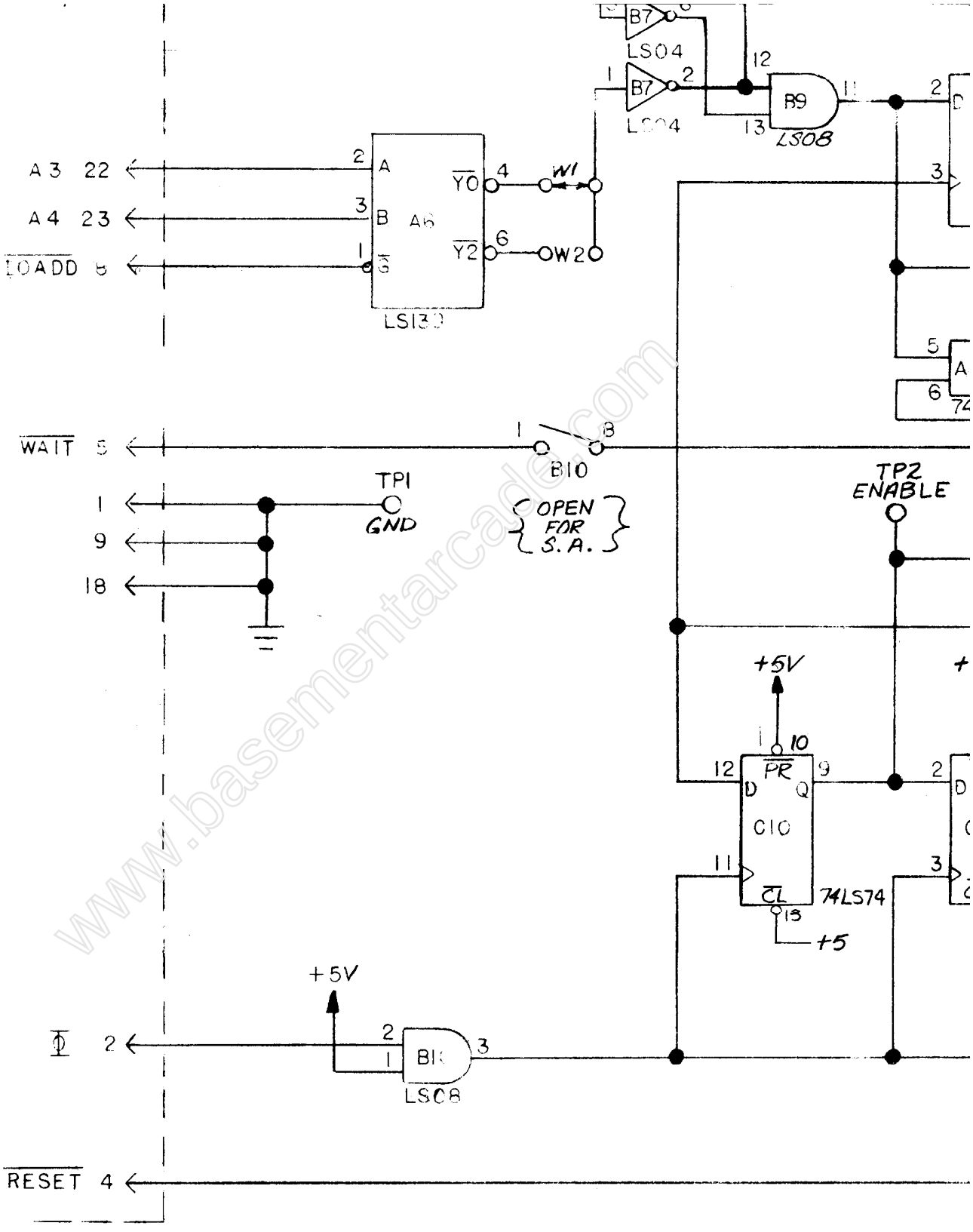

www.basementarcade.com

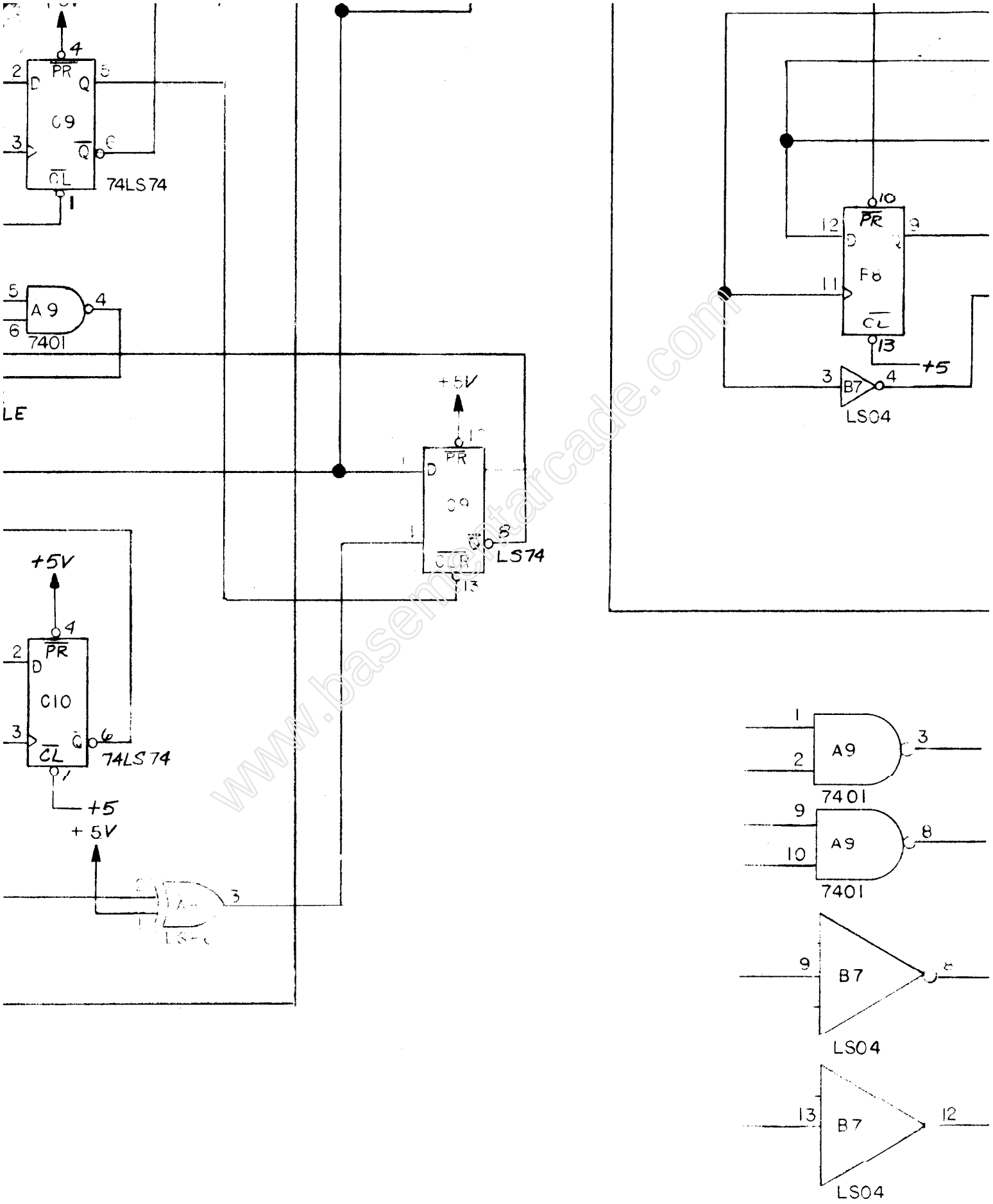

www.basementarcade.com

BASEMENT ARCADE CLASSICS
www.basementarcade.com

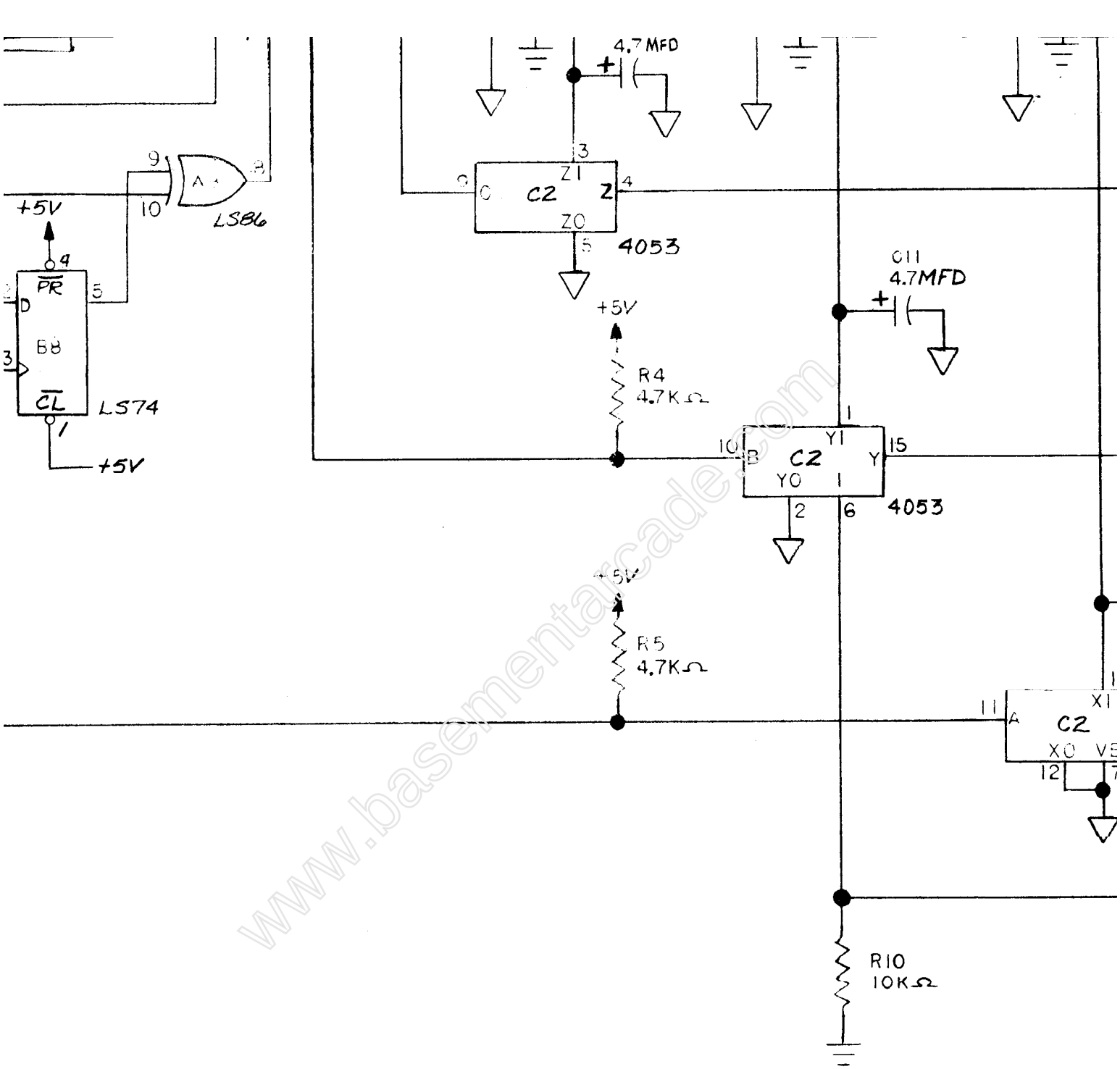

www.basementarcade.com

BASEMENT ARCADE
www.basementarcade.com CLASSICS

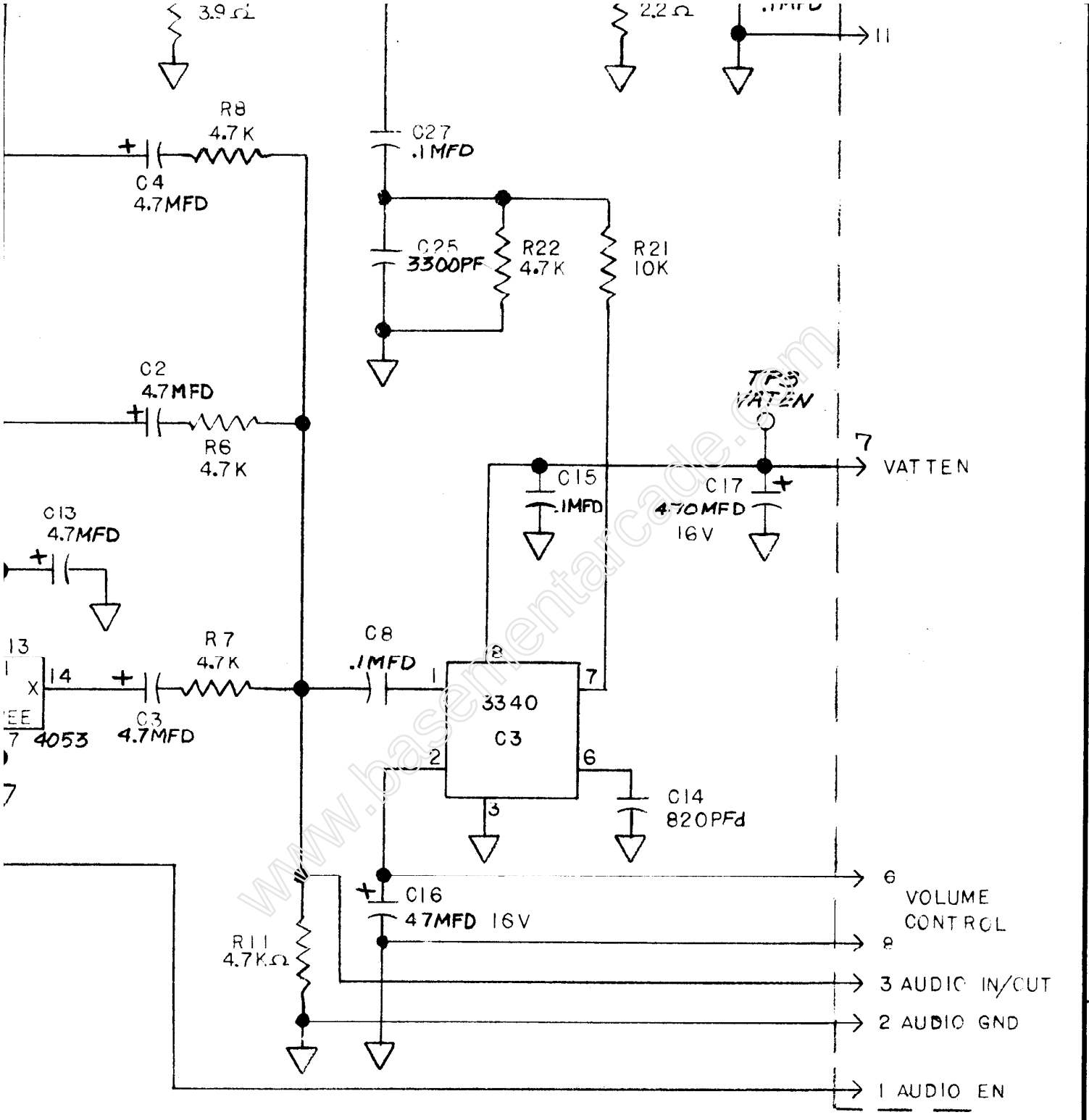

SCHEMATIC, ELECTRONIC SOUNDS
P.C BOARD

12D-665-S

www.basementarcade.com

BASEMENT ARCADE
www.basementarcade.com

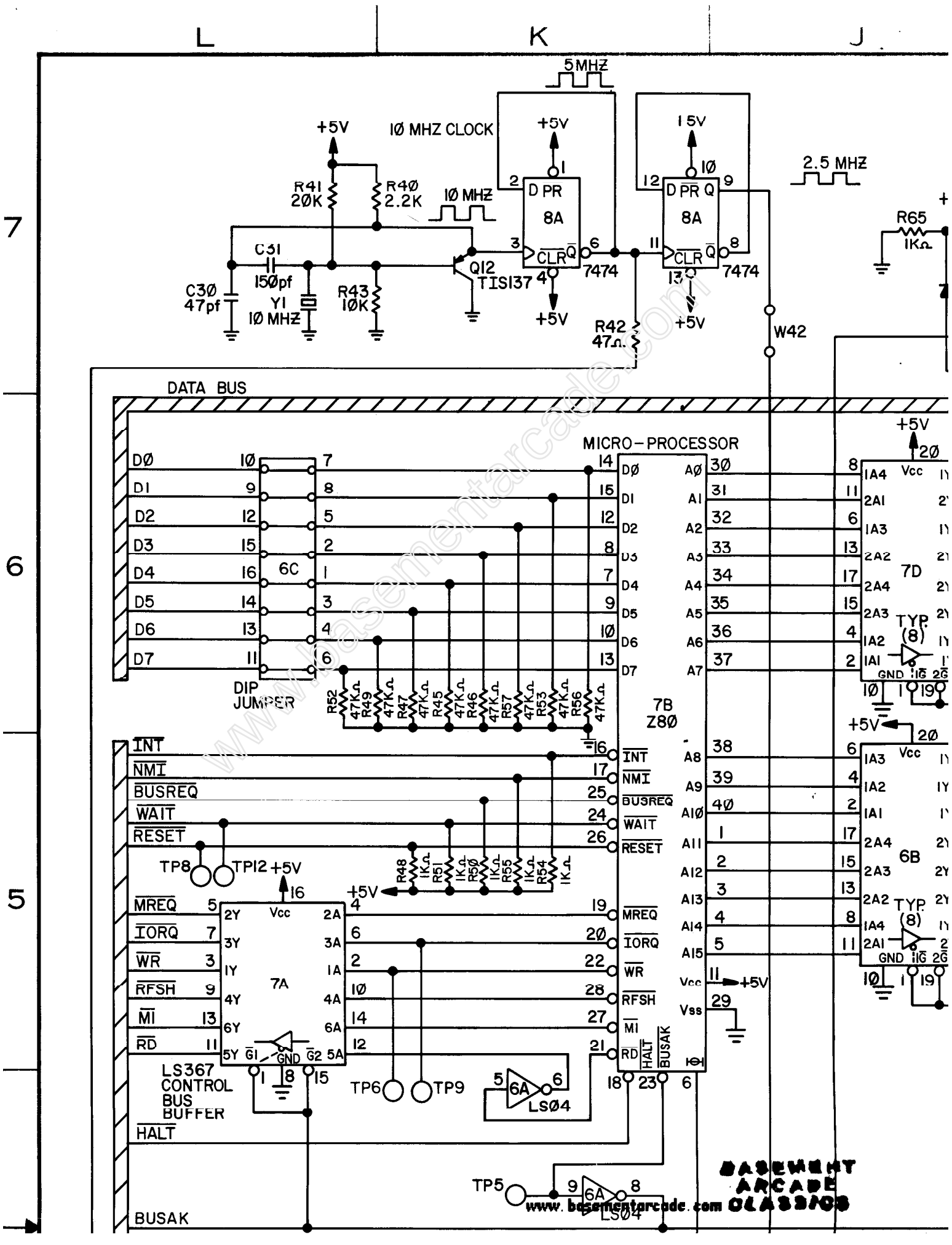
L
K
J
7
6
5
5MHZ
+5V
10 MHZ CLOCK
R41 20K
R40 2.2K
C31 150pf
C30 47pf
Y1 10 MHZ
R43 10K
Q12 TIS137
10 MHZ
D PR 8A
CLR Q
7474
2.5 MHZ
R65 1K
R42 47
W42
DATA BUS
MICRO-PROCESSOR
D0
D1
D2
D3
D4
D5
D6
D7
6C
DIP JUMPER
R52 47K
R49 47K
R47 47K
R45 47K
R46 47K
R57 47K
R53 47K
R56 47K
7B
Z80
A0
A1
A2
A3
A4
A5
A6
A7
A8
A9
A10
A11
A12
A13
A14
A15
INT
NMI
BUSREQ
WAIT
RESET
MREQ
IORQ
WR
RFSH
MI
RD
HALT
BUSAK
Vcc
Vss
TP8
TP12
R48 1K
R51 1K
R50 1K
R55 1K
R54 1K
7A
LS367
CONTROL
BUS
BUFFER
TP6
TP9
6A
LS04
TP5
7D
6B
TYP. (8)
GND
2G
BASEMENT ARCADE CLASSICS
www.basementarcade.com

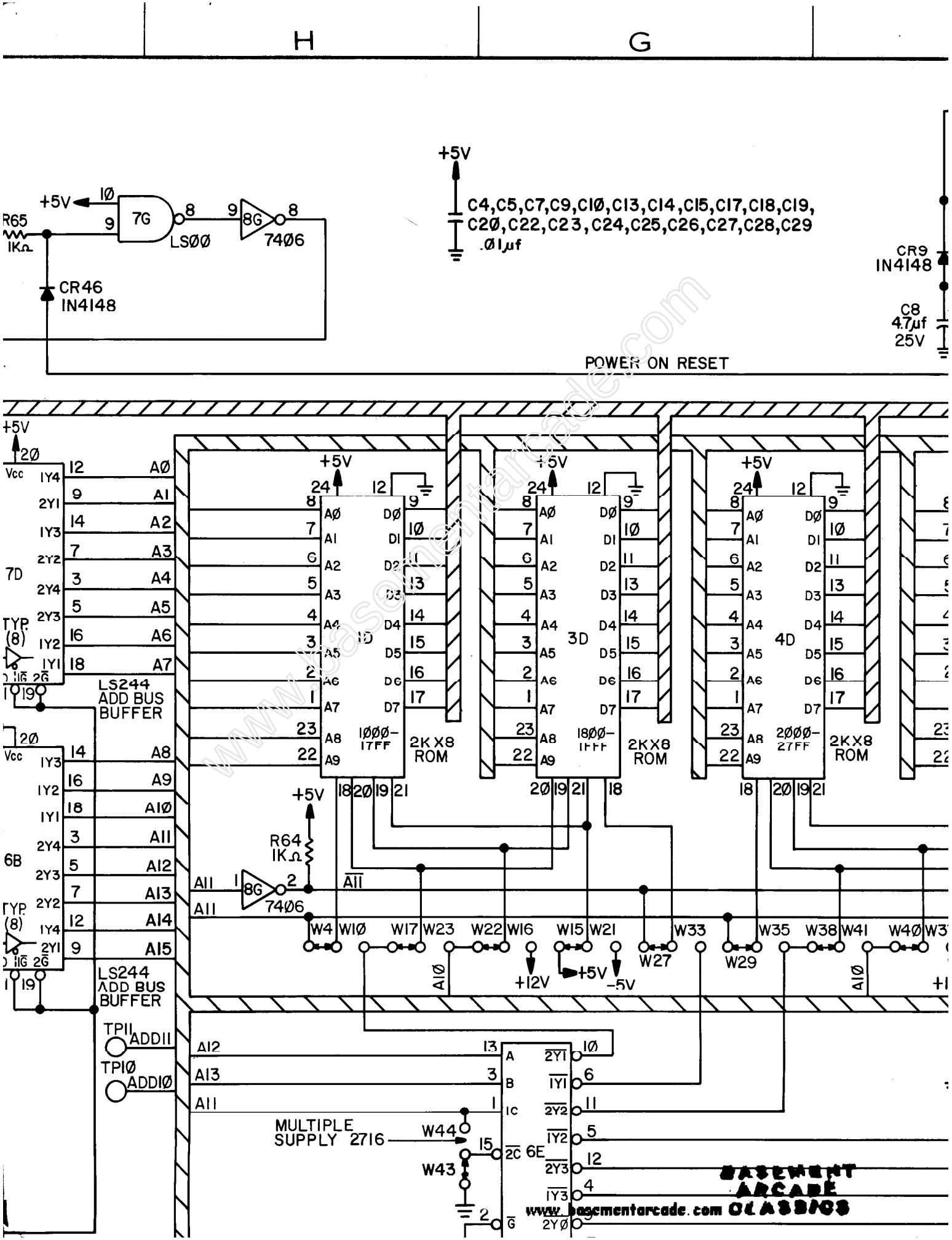

www.basementarcade.com
BASEMENT ARCADE CLASSICS

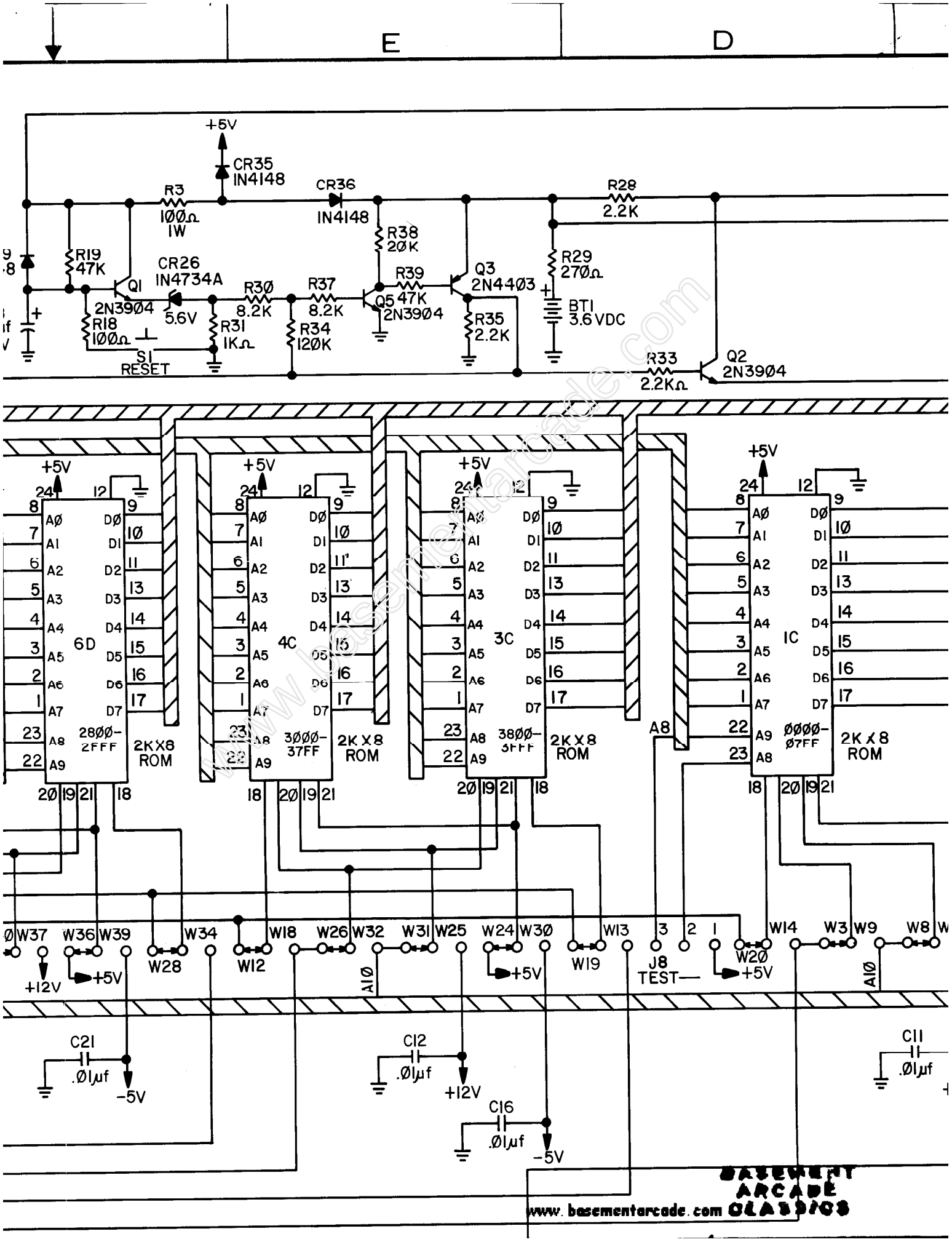

www.basementarcade.com
BASEMENT ARCADE CLASSICS

C B A

REVISIONS				
SYM	DESCRIPTION	DFT DATE	CHK DATE	APPD DATE
A	ISSUED EI 00324	10 8/4/80		
B	TO ALLOW THE POWER DETECT CIRCUIT TO FUNCTION UNDER ALL LINE CONDITIONS. E.I. 00438	10 9/10/80	10/1/80	10/1/80

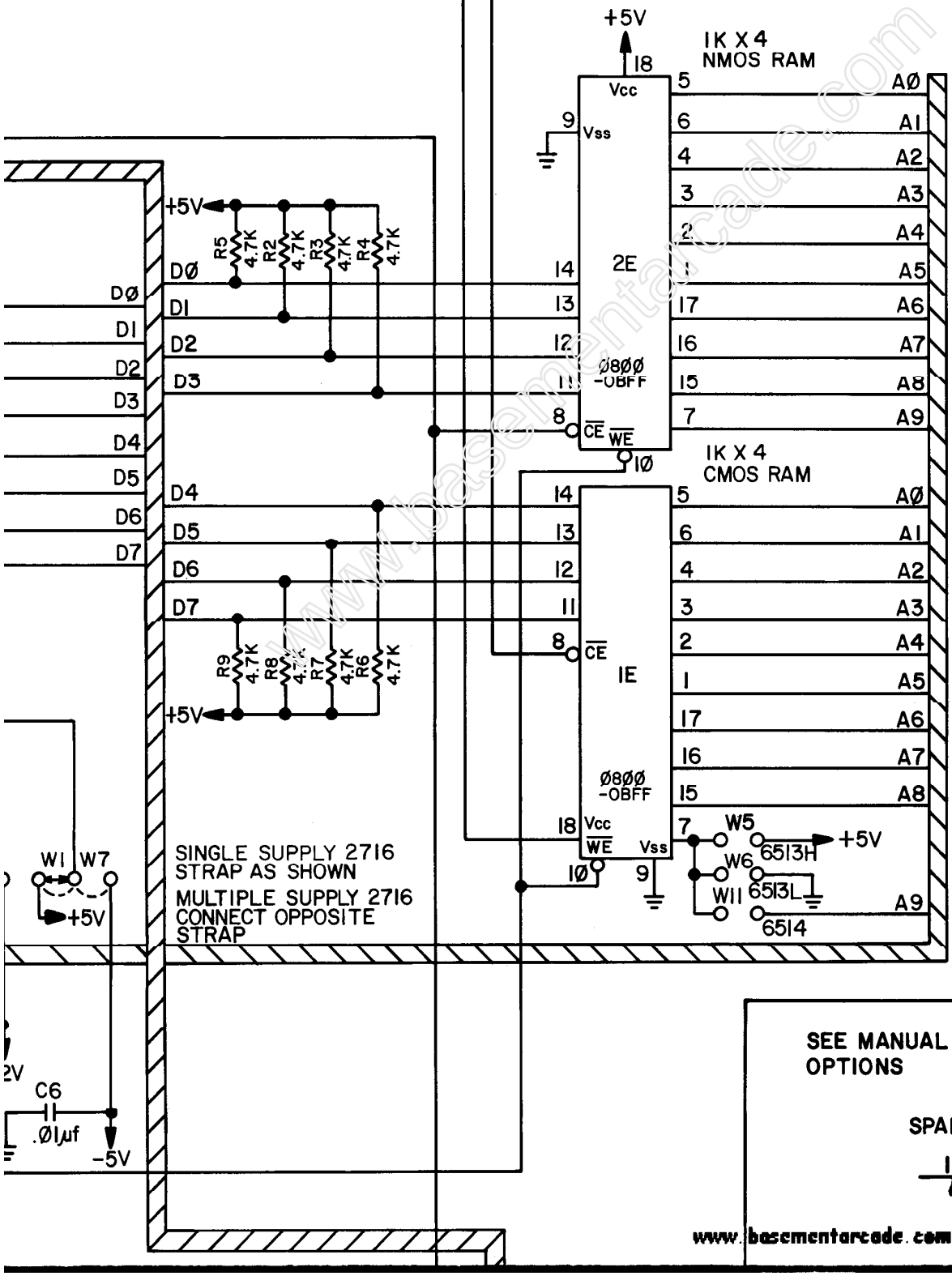

www.basementarcade.com

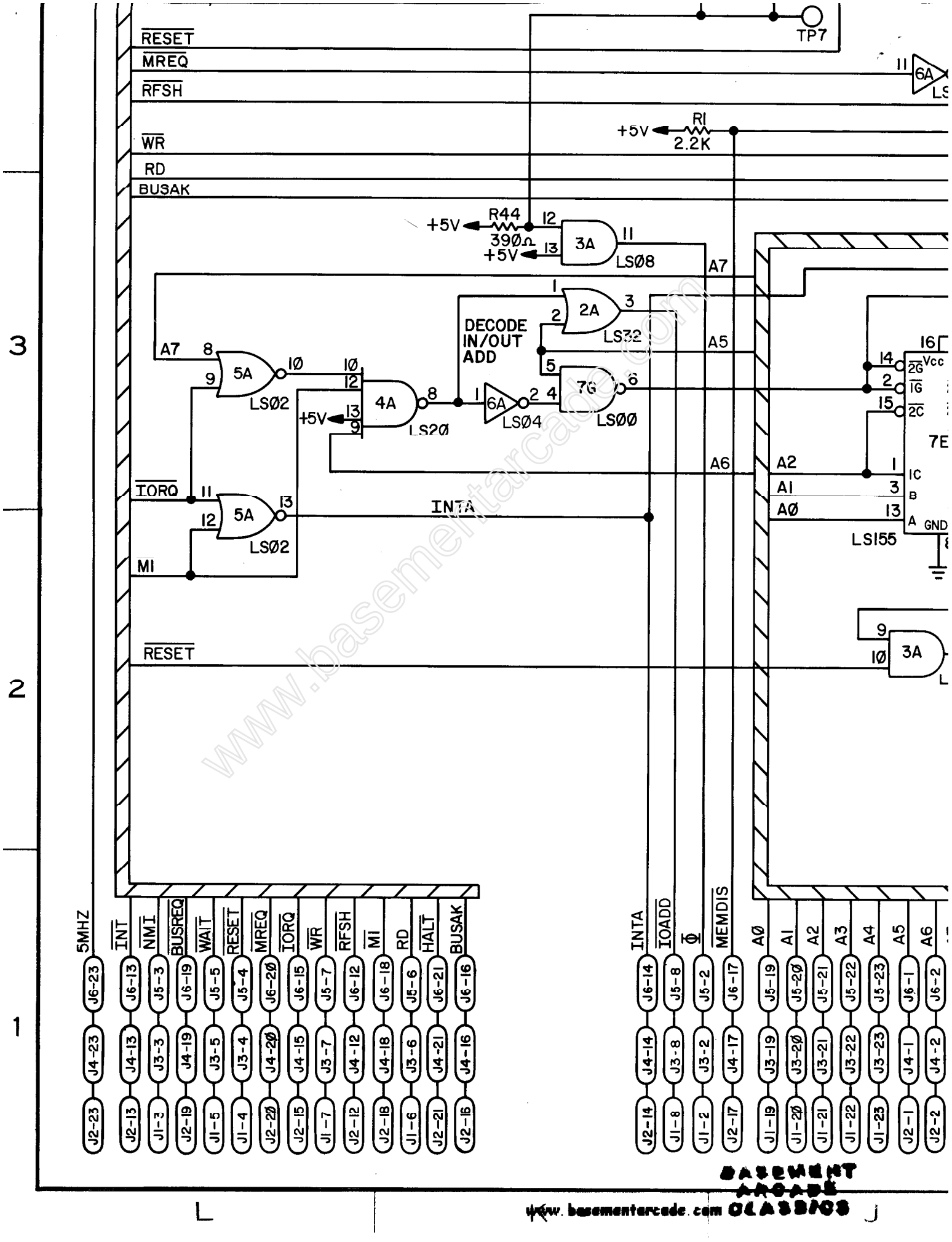

www.basementarcade.com

BASEMENT ARCADE CLASSICS
www.basementarcade.com

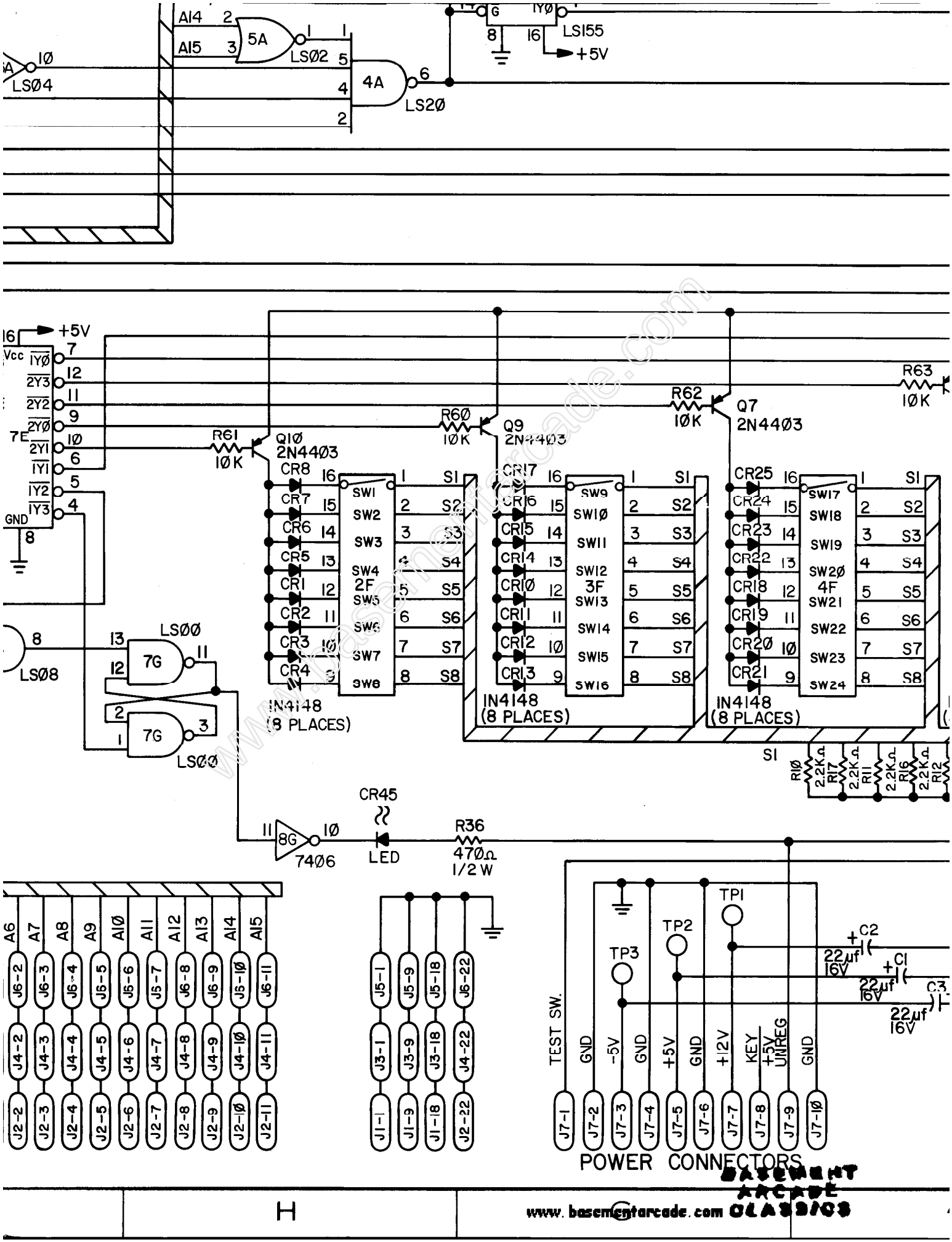

www.basementarcade.com

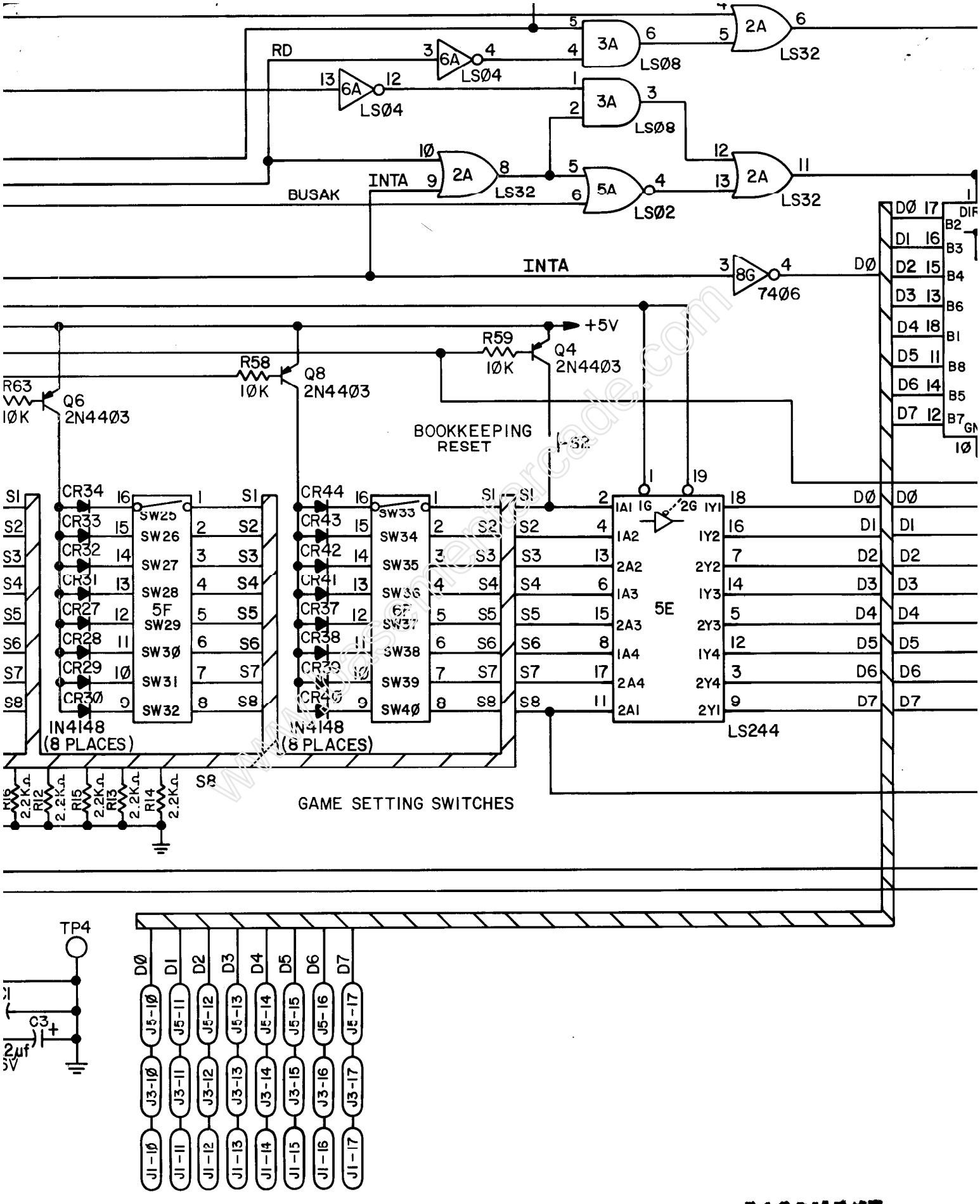

www.basementarcade.com

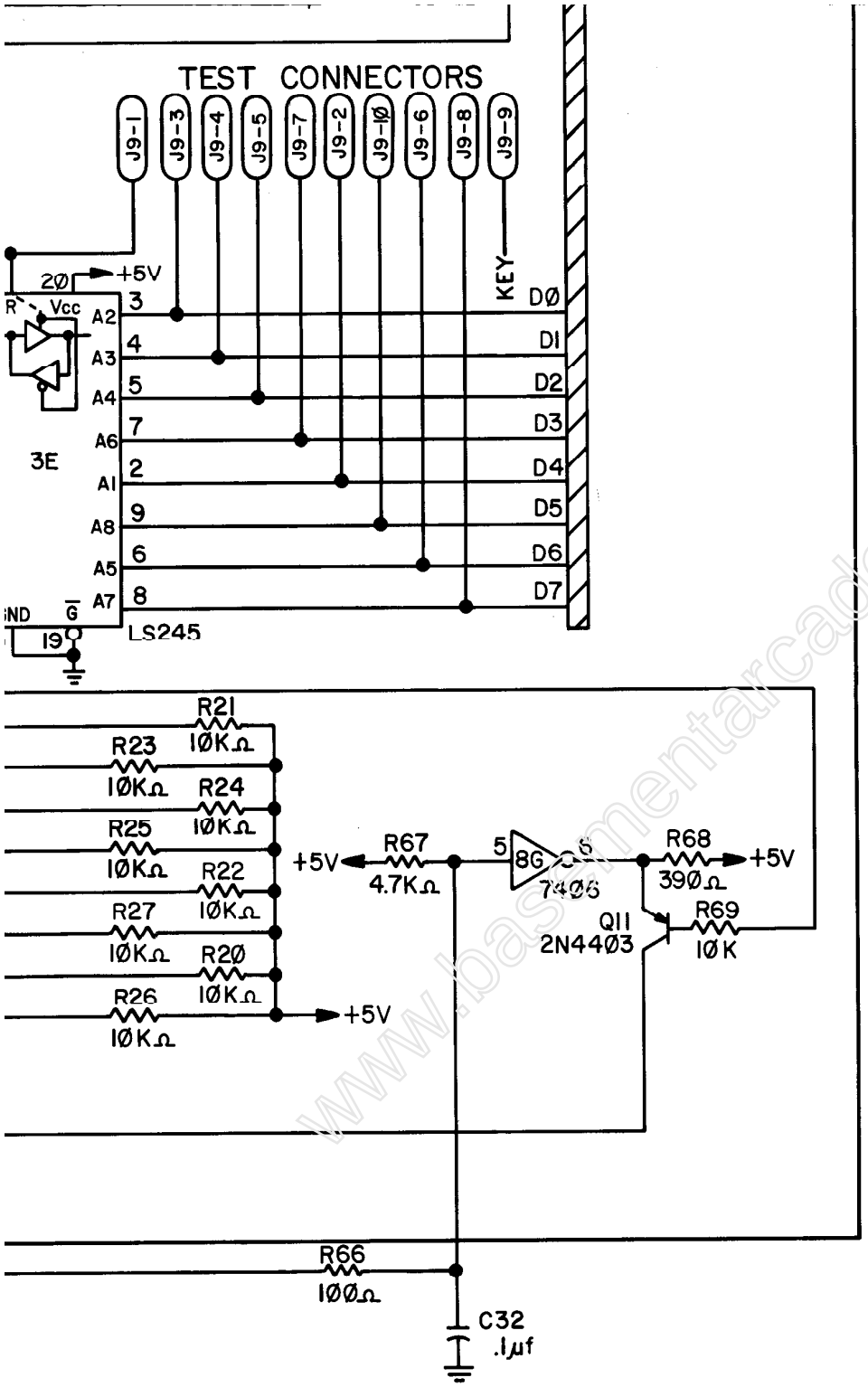

Z80	11	29
LS367	16	8
LS245	20	10
LS244	20	10
LS155	16	8
LS32	14	7
LS20	14	7
LS08	14	7
LS04	14	7
LS02	14	7
LS00	14	7
7474	14	7
7406	14	7
6514	18	9
6513	18	9
2716	24	12
2114	18	9
I.C. TYPE	+5V	GND
	PIN NO.	

STERN®

SCHEMATIC, ZENTRAL PROCESSING UNIT P.C. BOARD

12D-661-S

BASEMENT ARCADE CLASSICS
www.basementarcade.com

C B

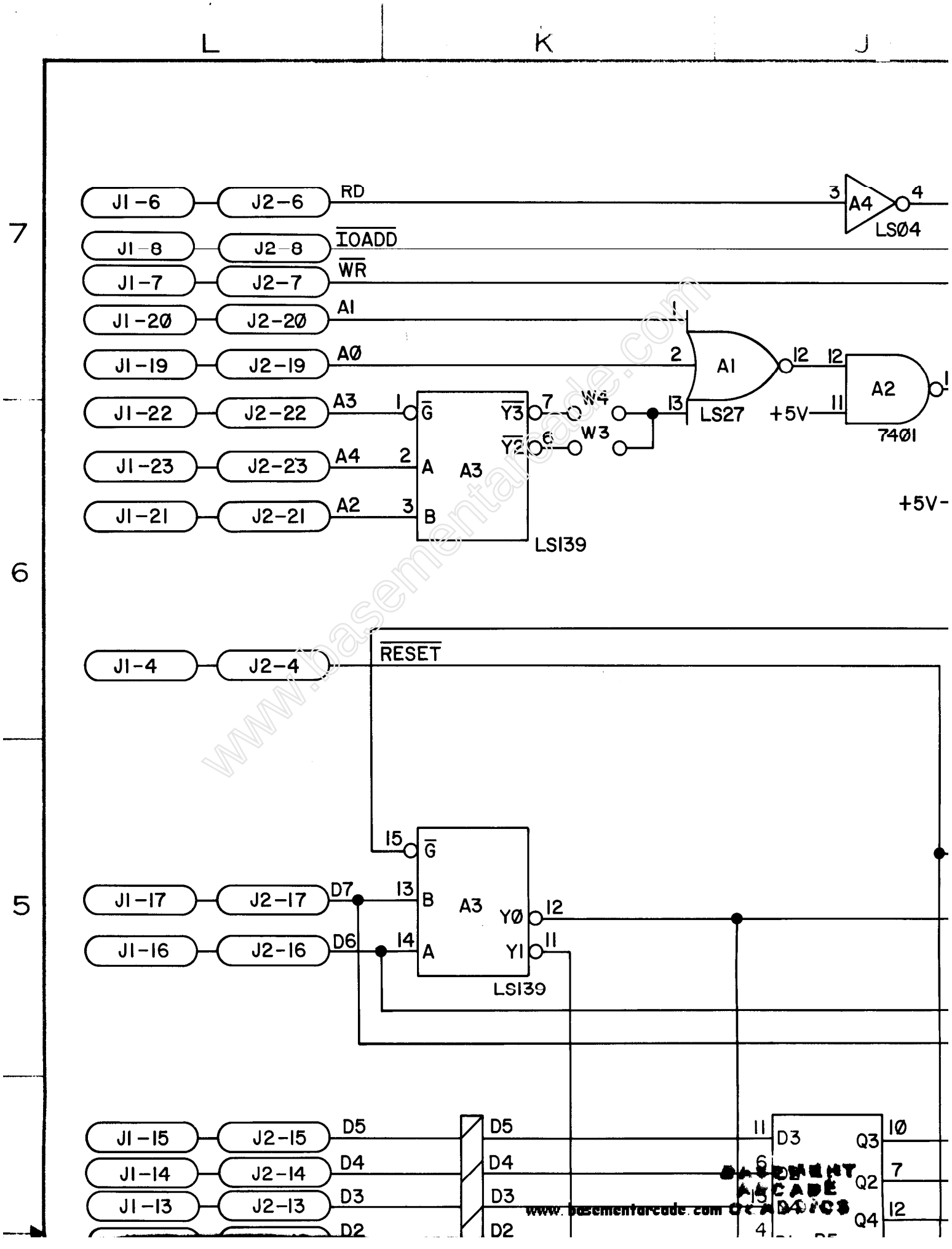
L
K
J
7
6
5
J1-6
J2-6
RD
J1-8
J2-8
IOADD
J1-7
J2-7
WR
J1-20
J2-20
A1
J1-19
J2-19
A0
J1-22
J2-22
A3
J1-23
J2-23
A4
J1-21
J2-21
A2
G
A
B
A3
LS139
Y3
Y2
W4
W3
A1
LS27
A2
7401
LS04
+5V
+5V-
J1-4
J2-4
RESET
J1-17
J2-17
D7
J1-16
J2-16
D6
Y0
Y1
J1-15
J2-15
D5
J1-14
J2-14
D4
J1-13
J2-13
D3
D2
D3
Q3
Q2
Q4
www.basementarcade.com

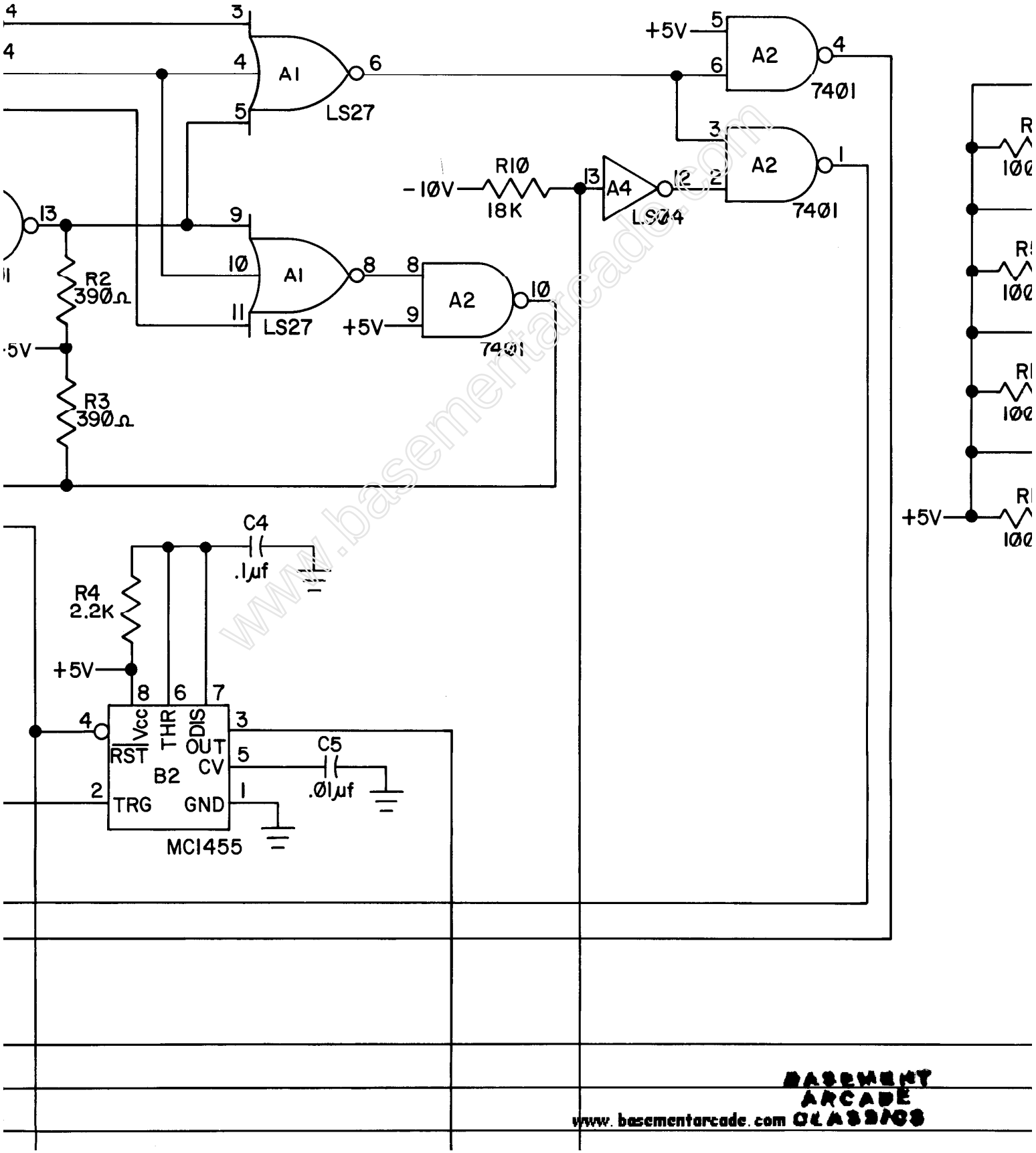

www.basementarcade.com

BASEMENT ARCADE CLASSICS
www.basementarcade.com

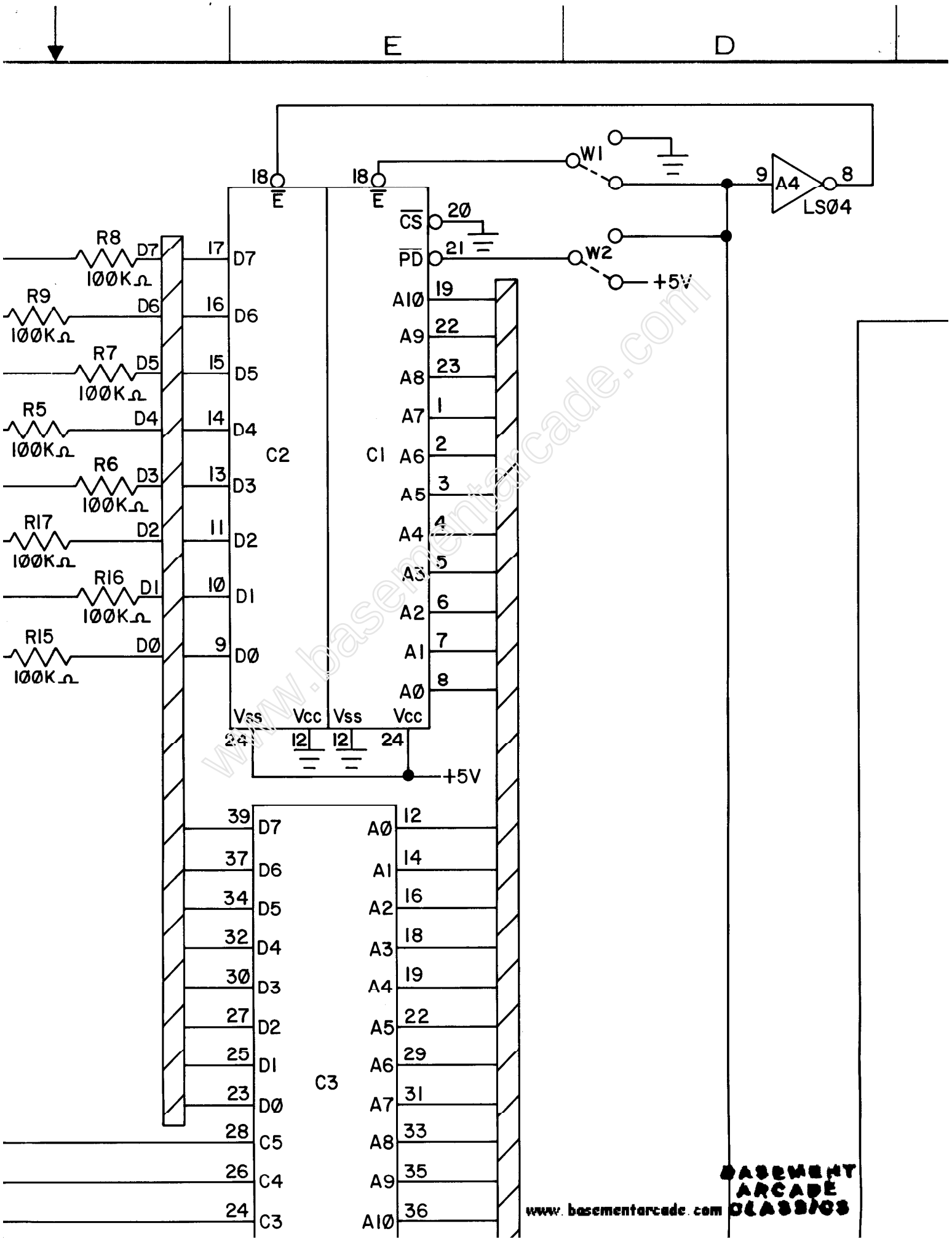
E
D
W1
W2
+5V
9
A4
8
LS04
18
E
18
E
CS
20
PD
21
R8
100KΩ
D7
17
D7
R9
100KΩ
D6
16
D6
R7
100KΩ
D5
15
D5
R5
100KΩ
D4
14
D4
R6
100KΩ
D3
13
D3
R17
100KΩ
D2
11
D2
R16
100KΩ
D1
10
D1
R15
100KΩ
D0
9
D0
C2
C1
A10
19
A9
22
A8
23
A7
1
A6
2
A5
3
A4
4
A3
5
A2
6
A1
7
A0
8
Vss
Vcc
Vss
Vcc
24
12
12
24
+5V
C3
39
D7
37
D6
34
D5
32
D4
30
D3
27
D2
25
D1
23
D0
28
C5
26
C4
24
C3
A0
12
A1
14
A2
16
A3
18
A4
19
A5
22
A6
29
A7
31
A8
33
A9
35
A10
36
www.basementarcade.com
BASEMENT ARCADE CLASSICS

C B A

REVISIONS

SYM	DESCRIPTION	DFT DATE	CHK DATE	APPD DATE
A	ISSUED EI. 00324	TN 8/22/80		
B	DRAFTING ERROR E.I. 00391	TN 9/19/80		

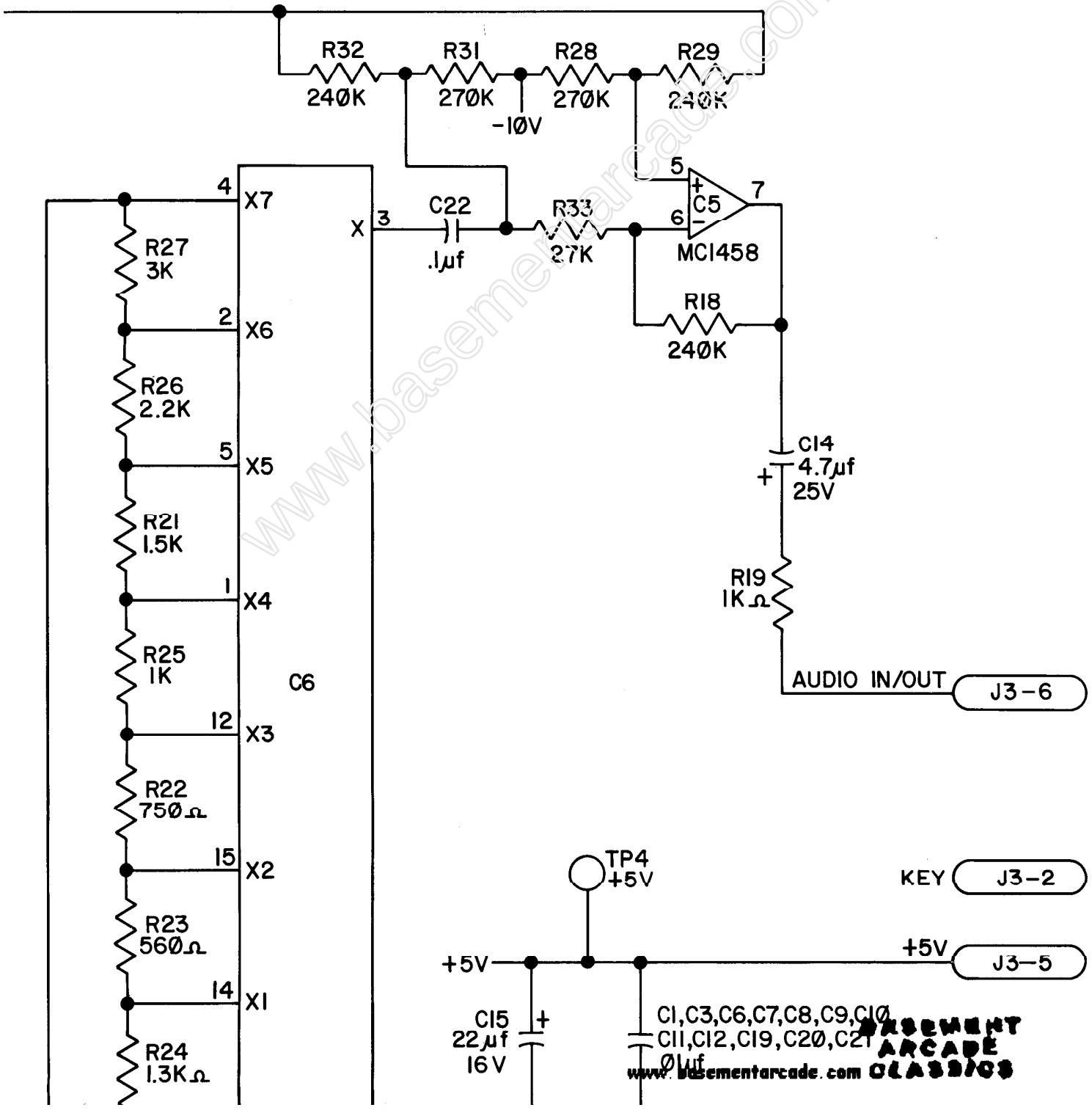

www.basementarcade.com

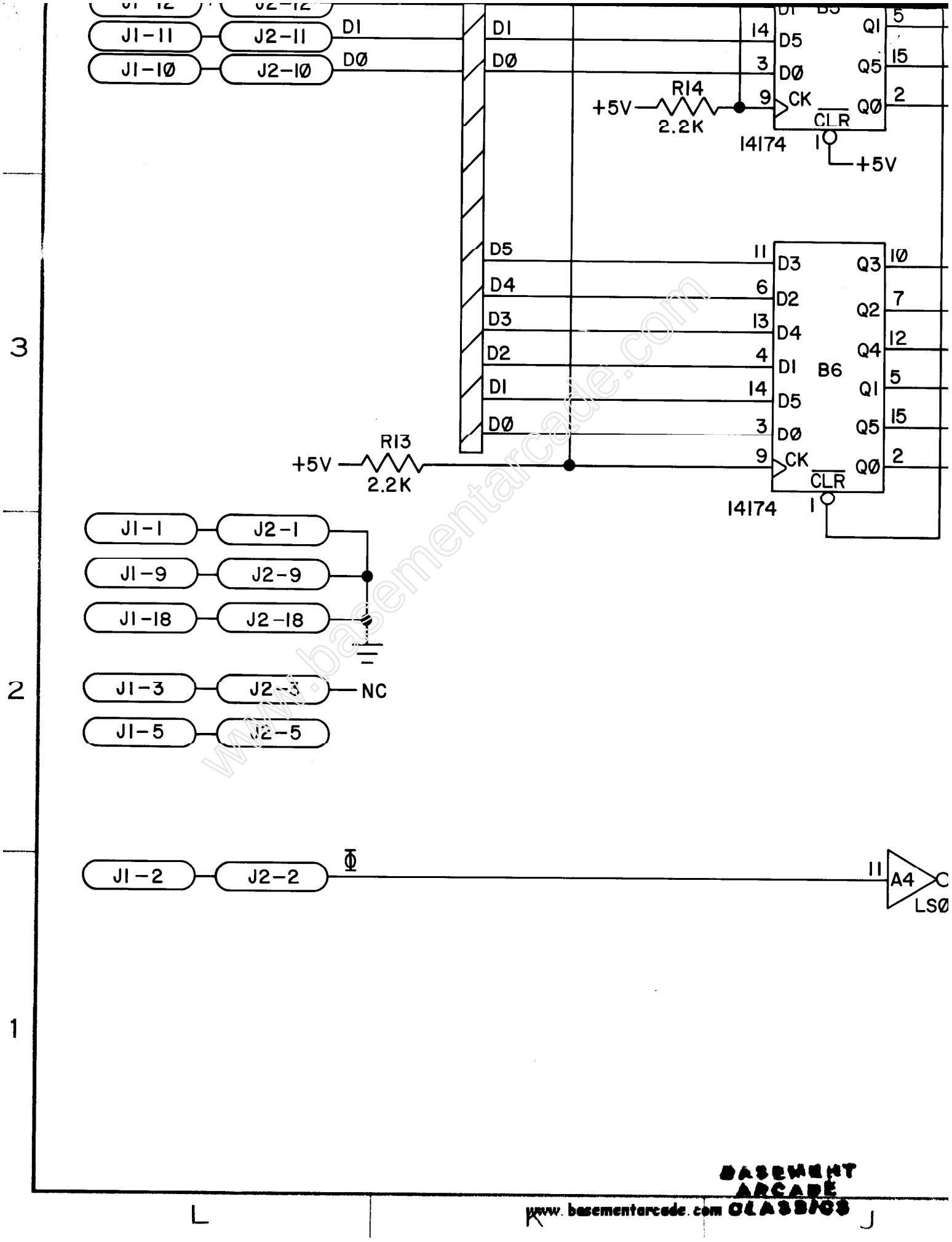

www.basementarcade.com
BASEMENT ARCADE CLASSICS

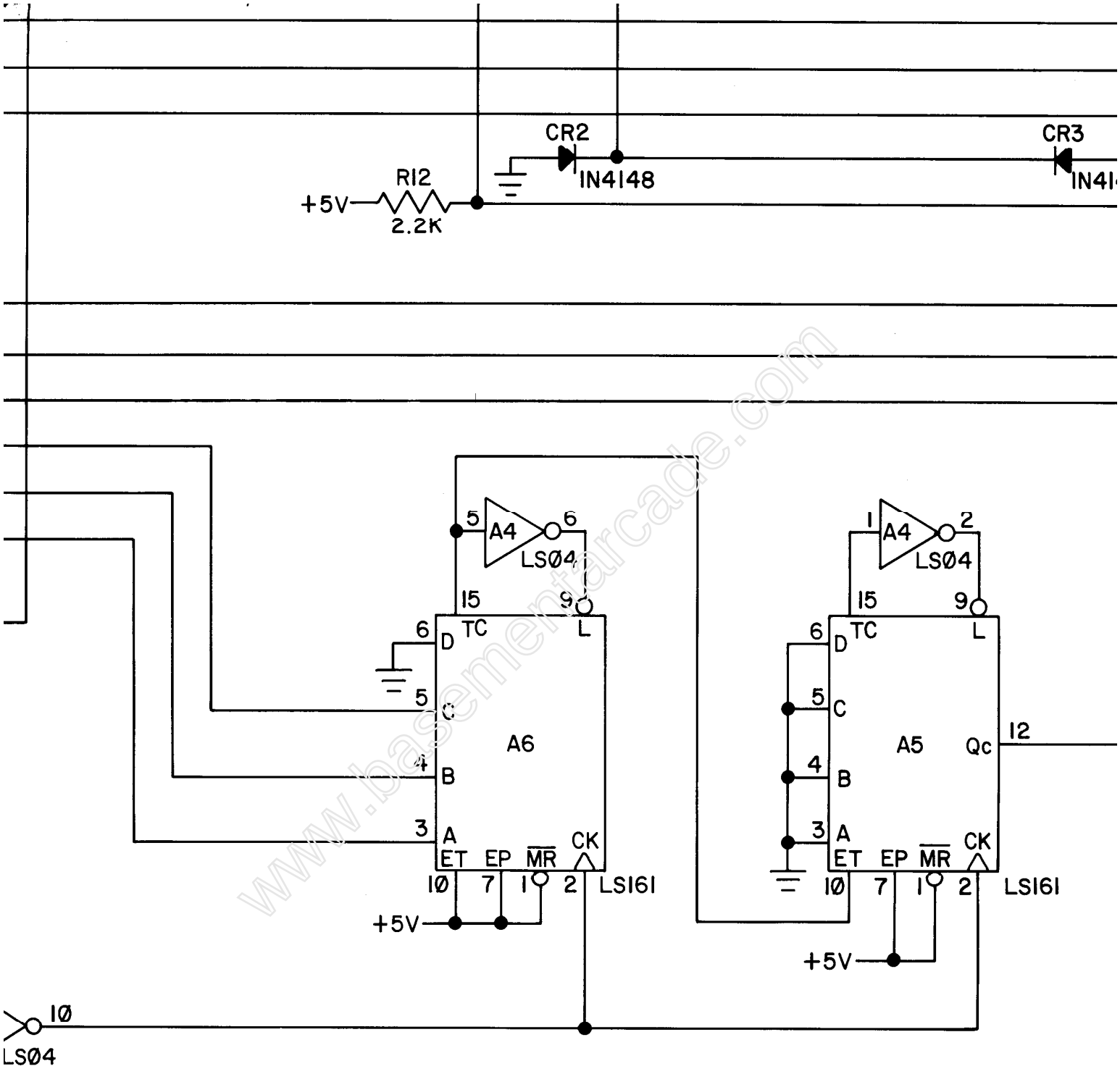

www.basementarcade.com

BASEMENT ARCADE CLASSICS
www.basementarcade.com

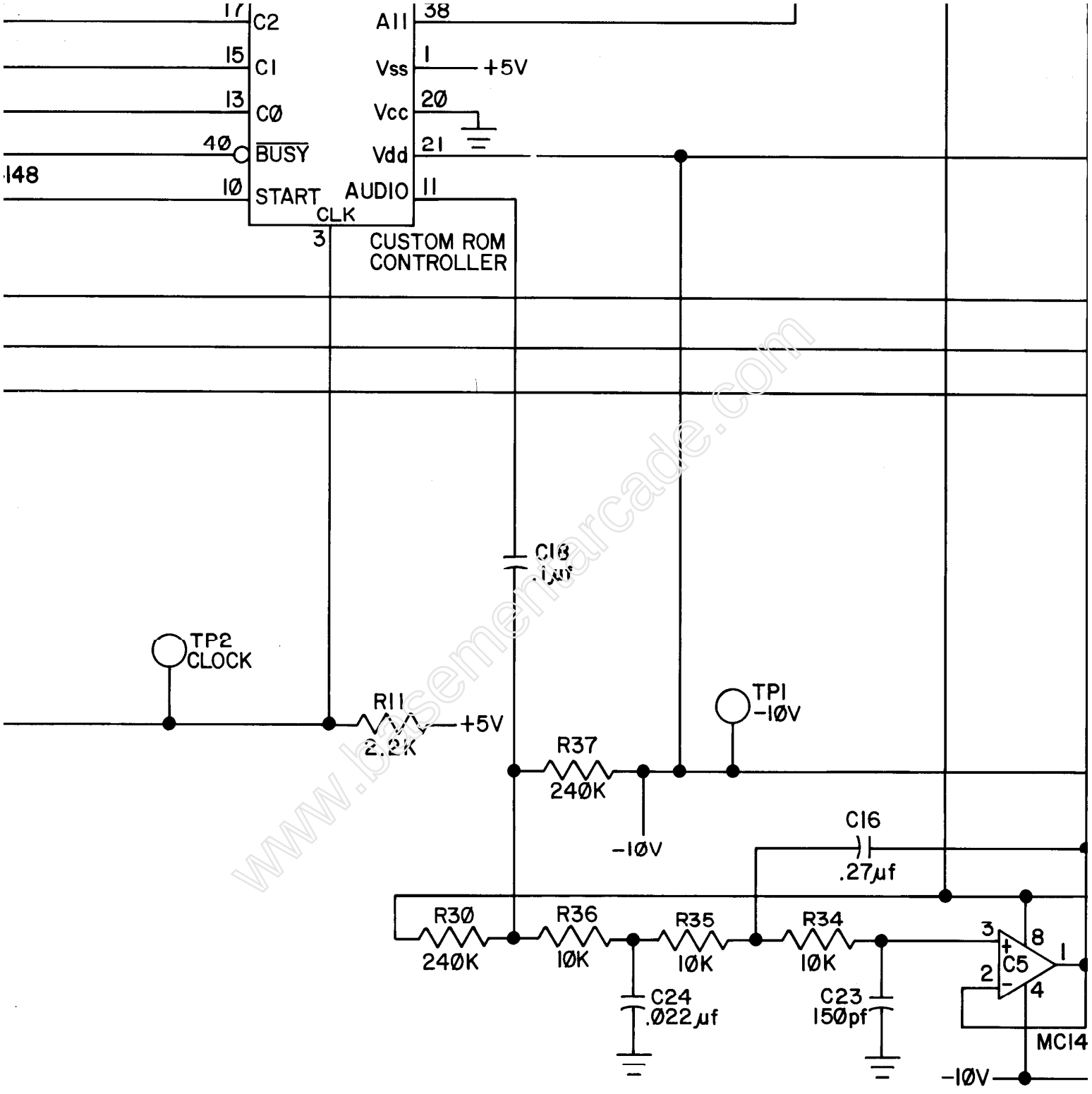

www.basementarcade.com

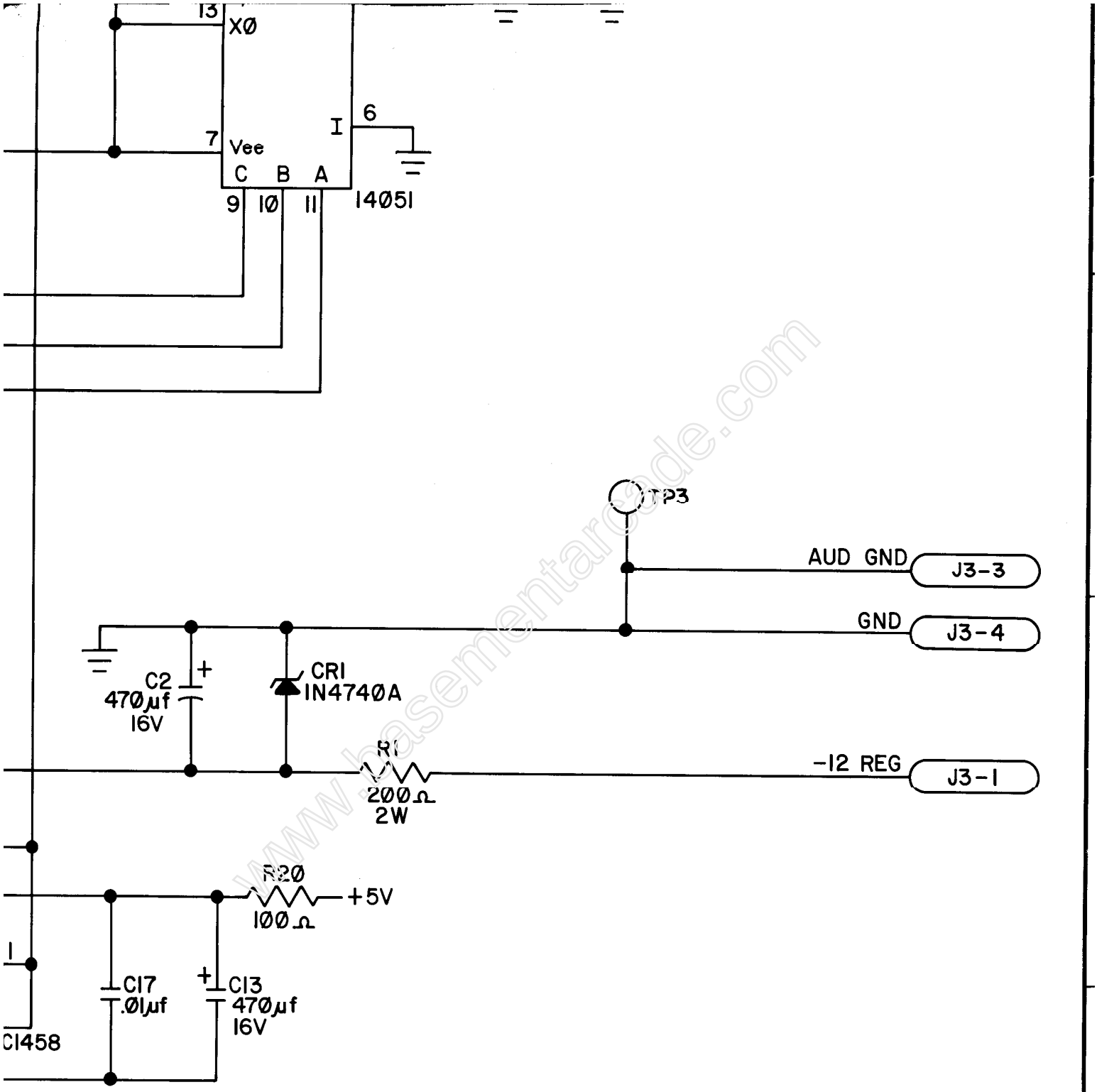

www.basementarcade.com

STERN®

SCHEMATIC, VOICE SYNTHESIZER UNIT P.C. BOARD

12D-708-S

BASEMENT ARCADE
www.basementarcade.com OLD SCHOOL

C B A

www.basementarcade.com

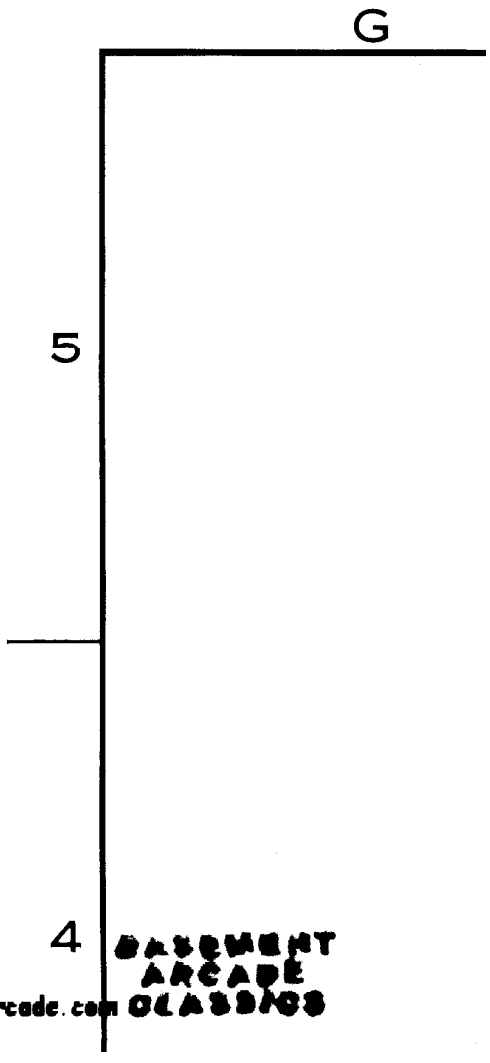

BASEMENT ARCADE CLASSICS
www.basementarcade.com

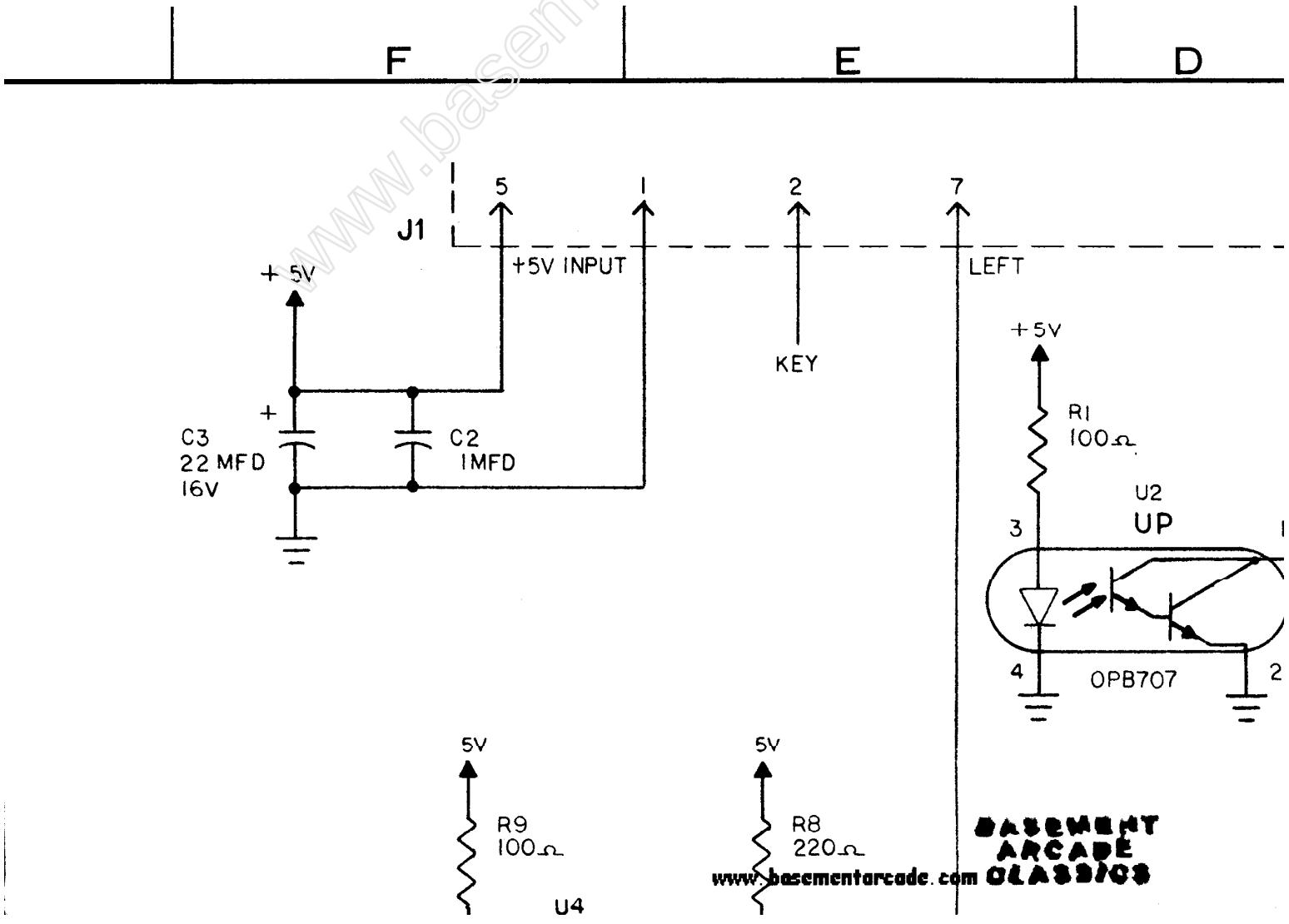

www.basementarcade.com
BASEMENT ARCADE CLASSICS

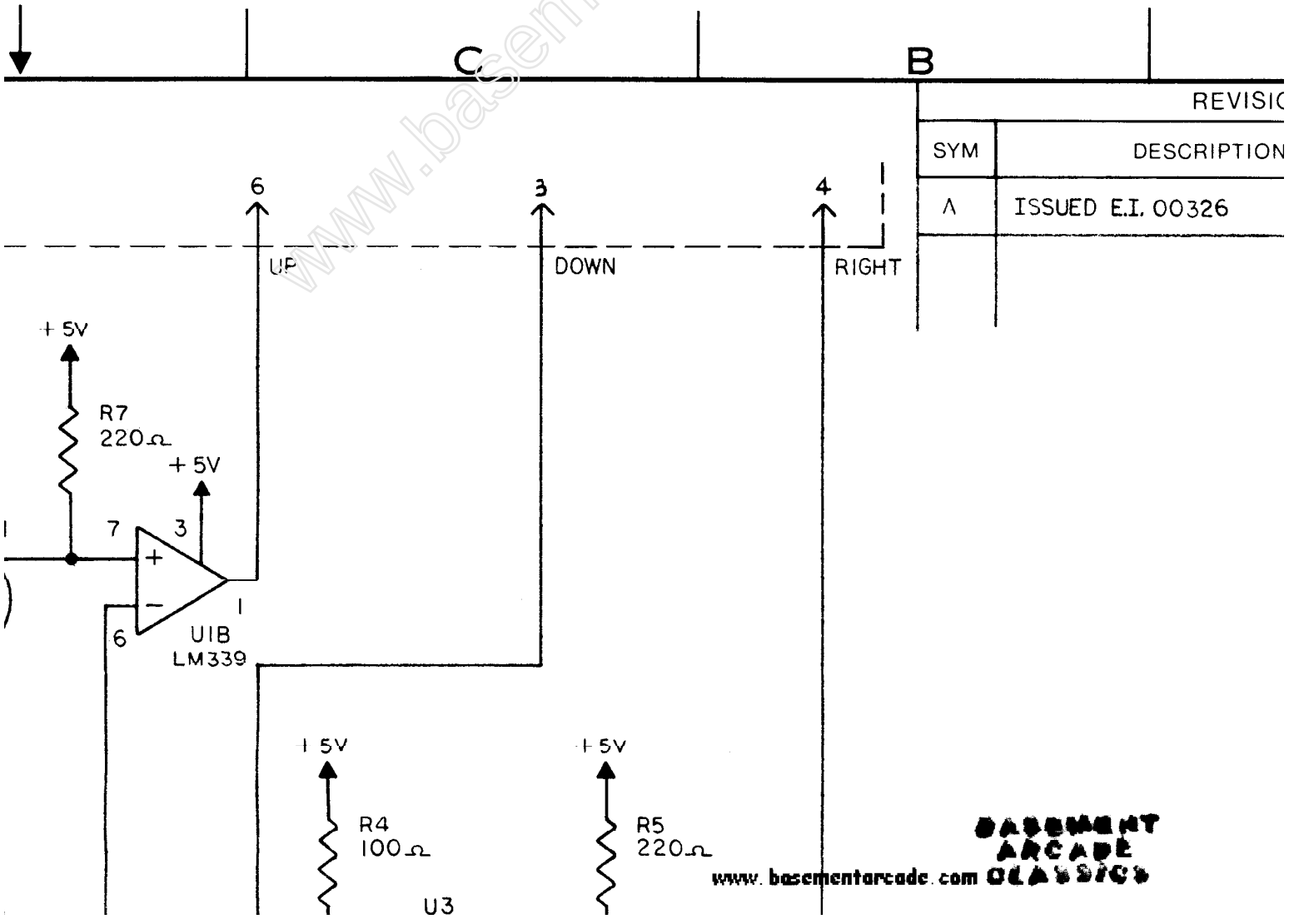

www.basementarcade.com

A

IONS			
ON	DFT. DATE	CHK. DATE	APPD DATE
	4.P.S. 8/28/84		

5

4

www.basementarcade.com

BASEMENT ARCADE CLASSICS
www.basementarcade.com

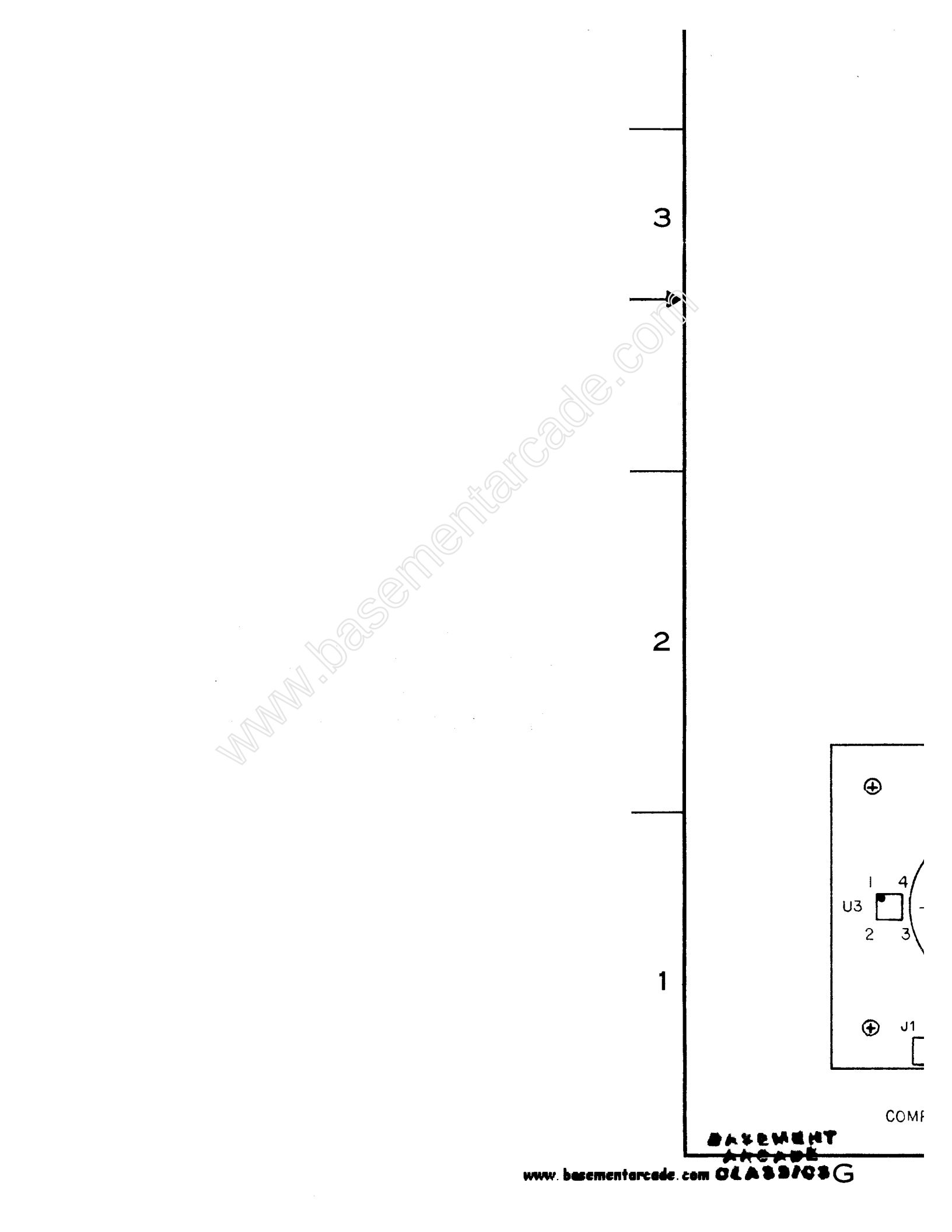

www.basementarcade.com

BASEMENT ARCADE
www.basementarcade.com CLASSICS

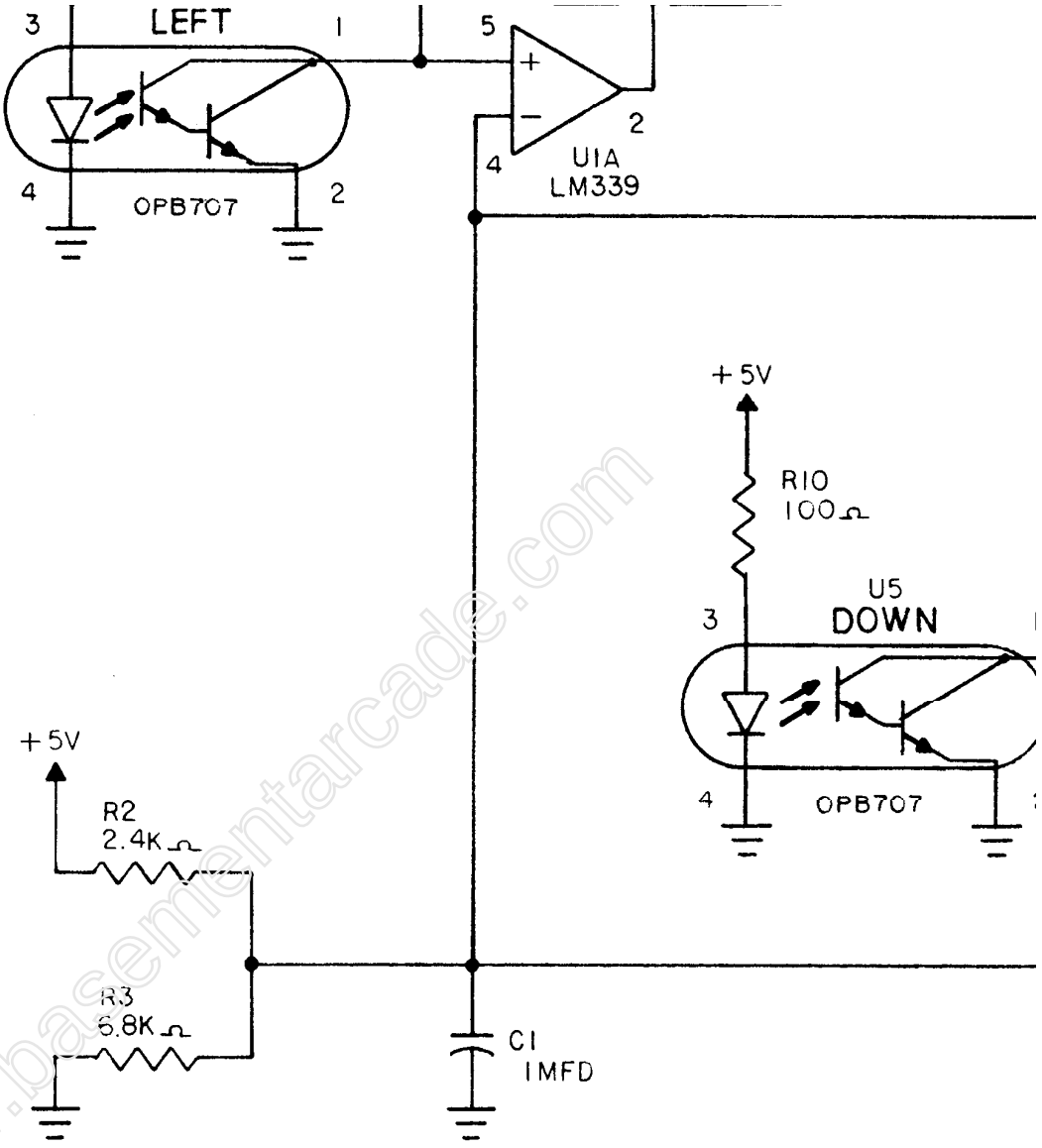

www.basementarcade.com

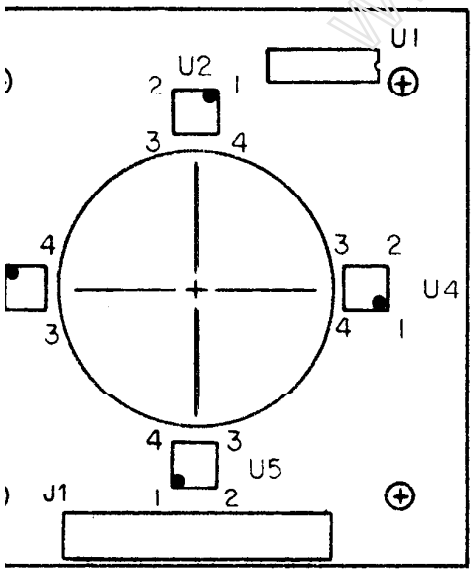

COMPONENT SIDE VIEW

BASEMENT ARCADE CLASSICS
www.basementarcade.com

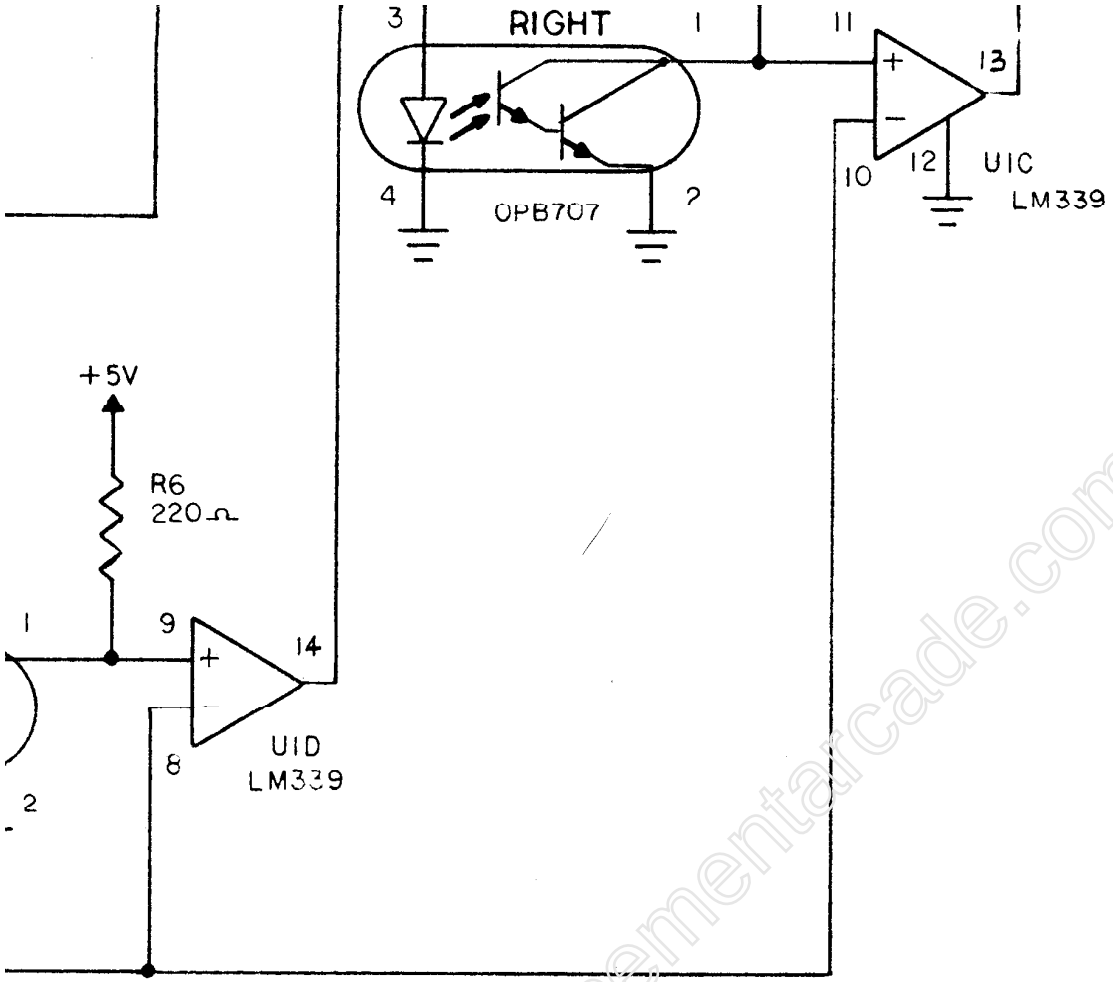

OPB707

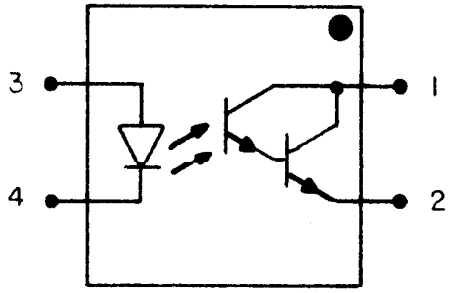

BOTTOM VIEW

www.basementarcade.com

SCHEMATIC PHC
PC BOA

12C-719-S

BASEMENT ARCADE
www.basementarcade.com CLASSICS

C

B

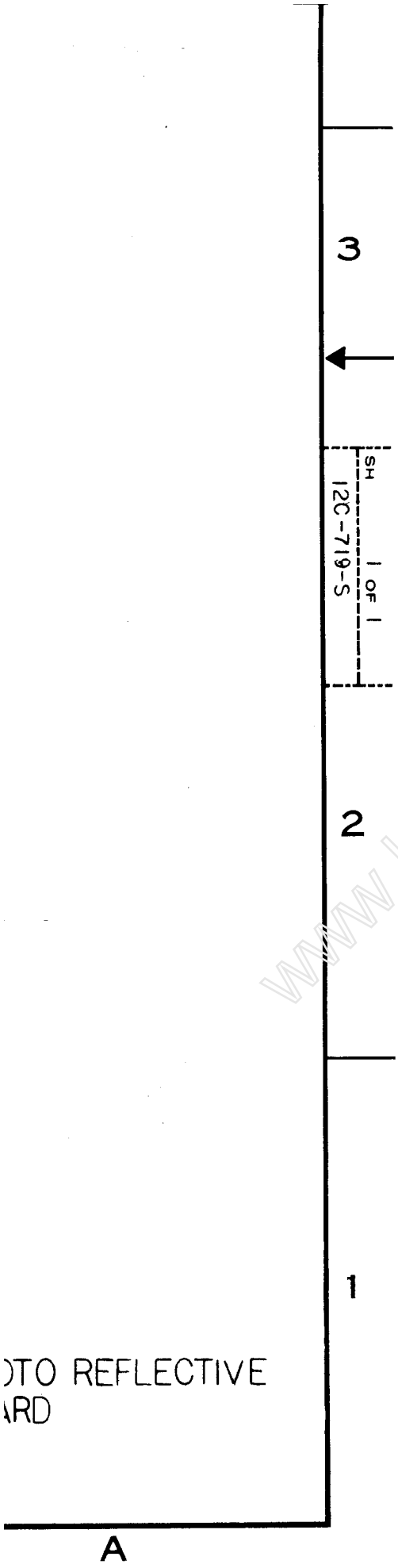

www.basementarcade.com

BASEMENT
ARCADE
www.basementarcade.com CLASSICS