Thank You for downloading this manual. I hope it helps you resolve any issues you have had with your game.

This manual was purchased, and scanned by Basement Arcade Associates, www.basementarcade.com and is offered for free download at our site.

This PDF is not to be distributed on any collection CD / DVD, nor is to be linked to via any other internet site without permission from us. Likewise it is not to be distributed from any other site without our permission.

Abiding by these requests, will insure the continuing support of new manuals added to our site.

All original copyrights held by their original owners, This PDF copyrighted Basement Arcade Associates.

-=Mark=-

www.basementarcade.com

GAME NOS. 935, 936 & 937
JANUARY, 1981

MIDWAY'S RALLY-X

PARTS AND OPERATING MANUAL

#935-UPRIGHT #936-COCKTAIL #937-MINI

MIDWAY MFG. CO.
A BALLY COMPANY
10750 WEST GRAND AVENUE
FRANKLIN PARK, ILLINOIS 60131
U.S.A.

PHONE: (312) 451-1360 CABLE ADDRESS: MIDCO TELEX NO.: 72-1596

RM NO. 0935-00300-0000

www.basementarcade.com

TABLE OF CONTENTS

	Page No.
GENERAL INSTRUCTIONS—RALLY-X UPRIGHT	1
GENERAL INSTRUCTIONS—RALLY-X MINI	2
GENERAL INSTRUCTIONS—RALLY-X COCKTAIL	3—4
SETTING UP PROCEDURE	5
TROUBLE SHOOTING (GAME TESTS)	5—7
SWITCH ADJUSTMENTS	8
PLAYING INSTRUCTIONS	9
NO. 935—RALLY-X UPRIGHT—PHOTOGRAPH	10—11
INTERIOR ACCESS PICTURE	12—13
NO. 937—RALLY-X MINI—PHOTOGRAPH	14—15
INTERIOR ACCESS PICTURE	16—17
NO. 936—RALLY-X COCKTAIL—PHOTOGRAPH	18—19
INTERIOR ACCESS PICTURE	20—21
COCKTAIL CONTROL SHELF ASSEMBLY	22—23
CARD RACK ASSEMBLY	24—25
CONTROL ASSEMBLY	26—27
PUSH BUTTON ASSEMBLY	28—29
TRANSFORMER BOARD ASSEMBLY	30—31
DOUBLE ENTRY COIN DOOR ASSEMBLY	32—33
SINGLE ENTRY COIN DOOR ASSEMBLY	34—35
GAME BOARD COMPONENT LAYOUT—BOARD #1	36
GAME BOARD COMPONENT LAYOUT—BOARD #2	37
GAME BOARD SCHEMATIC—BOARD #1	38
GAME BOARD SCHEMATIC—BOARD #2	39
GAME BOARD #1 PART NO. & FUNCTION LIST	40
GAME BOARD #2 PART NO. & FUNCTION LIST	40
POWER SUPPLY COMPONENT LAYOUT	41
POWER SUPPLY SCHEMATIC	42
CREDIT MULTIPLYER COMPONENT LAYOUT	43
CREDIT MULTIPLYER SCHEMATIC	44
WIRING DIAGRAM—UPRIGHT (DOMESTIC)	45
WIRING DIAGRAM—UPRIGHT (FOREIGN)	46
WIRING DIAGRAM—MINI (DOMESTIC)	47
WIRING DIAGRAM—MINI (FOREIGN)	48
WIRING DIAGRAM—COCKTAIL	49
19" MONITOR SCHEMATIC—WELLS-GARDNER	50
REPLACEMENT PARTS LIST	51—52
WELLS-GARDNER MONITOR ADJUSTMENTS	53—56
19" MONITOR SCHEMATIC—ELECTROHOME	57
REPLACEMENT PARTS LIST	58—61
13" MONITOR SCHEMATIC—ELECTROHOME	62
REPLACEMENT PARTS LIST	63—66
ELECTROHOME MONITOR ADJUSTMENTS	67—69

WARNING

THIS GAME MUST BE GROUNDED. FAILURE TO DO SO MAY RESULT IN DESTRUCTION TO ELECTRONIC COMPONENTS.

COPYRIGHT 1981 ©BY MIDWAY MFG. CO. ALL RIGHTS RESERVED.

NO PART OF THIS PUBLICATION MAY BE REPRODUCED BY ANY MECHANICAL, PHOTOGRAPHIC, OR ELECTRONIC PROCESS, OR IN THE FORM OF A PHONOGRAPHIC RECORDING, NOR MAY IT BE TRANSMITTED, OR OTHERWISE COPIED FOR PUBLIC OR PRIVATE USE, WITHOUT PERMISSION FROM THE PUBLISHER.

FOR PERMISSION REQUESTS, WRITE: MIDWAY MFG. CO., 10750 W. GRAND AVE., FRANKLIN PARK, IL 60131

GENERAL INSTRUCTIONS FOR RALLY-X UPRIGHT

INSTALLATION

1. Remove shipping cleats located on bottom of cabinet.
2. Install four (4) provided leg levelers to bottom of cabinet and level cabinet.
3. The power is controlled by a switch located on top of the cabinet. Additional taps have been provided on the transformer to compensate for fluctuating line voltage.
4. Upright only - To remove protective paper coating from decal - each side of cabinet, soak paper with water to soften and carefully start "peel back" of paper with fingernail. Peel paper parallel to cabinet side. "DO NOT PULL OUT".

LINE VOLTAGE SAFETY SWITCH

A line voltage safety switch has been provided for your protection. It is located on the right rear side of the cabinet in the back door area. When the back door is removed, it opens the circuit to the line voltage. To restore power (when servicing), pull switch fully out.

VOLUME CONTROL

The volume control pot is located on the Game Logic Board (P.C. A082-91385-C000). This pot controls the volume of all sounds and may be varied as desired by rotating pot control.

ADJUSTMENT SWITCHES

Located on Game Logic Board (P.C. A082-91385-C000) and may be adjusted as indicated on separate instruction card in back box area.

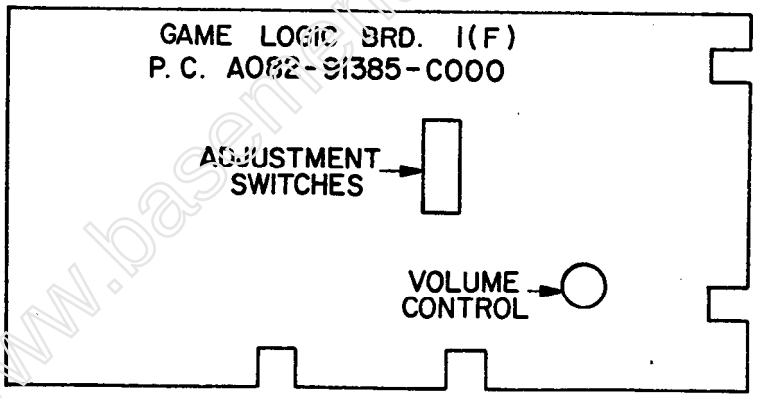

TO REMOVE CONTROL PANEL AND MONITOR DISPLAY GLASS

1. Open coin door.
2. Release two (2) clamps located below Control Panel on each side of cabinet.
3. Disconnect control panel jack.
4. Remove control panel.
5. Remove monitor display glass.

CREDIT PUSH BUTTON SWITCH

Located in cash box area and is readily accessible by opening coin door. This switch is provided as a test aid and awards one credit without advancing coin meter.

WARNING: This equipment Generates, Uses and can Radiate Radio Frequency Energy and if not installed and used in accordance with the Instruction Manual, may cause interference to Radio Communications. As temporarily permitted by Regulation it has not been tested for compliance to Subpart J or Part 15 of FCC Rules, which are designed to provide reasonable protection against such interference. Operation of this equipment in a Residential Area is likely to cause interference in which case the user at his own expense will be required to take whatever measures may be required to correct the interference.

M051-00935-A003

www.basementarcade.com

GENERAL INSTRUCTIONS FOR RALLY-X MINI

INSTALLATION

1. Remove shipping cleats located on bottom of cabinet.
2. Install four (4) provided leg levelers to bottom of cabinet and level cabinet.
3. The power is controlled by a switch located on the back of the cabinet. Additional taps have been provided on the transformer to compensate for fluctuating line voltage.

LINE VOLTAGE SAFETY SWITCH

A line voltage safety switch has been provided for your protection. It is located on the right rear side of the cabinet in the back door area. When the back door is removed, it opens the circuit to the line voltage. To restore power (when servicing), pull switch fully out.

VOLUME CONTROL

The volume control pot is located on the Game Logic Board (P.C. A082-91385-C000). This pot controls the volume of all sounds and may be varied as desired by rotating pot control.

ADJUSTMENT SWITCHES

Located on Game Logic Board (P.C. A082-91385-C000) and may be adjusted as indicated on separate instruction card in back box area.

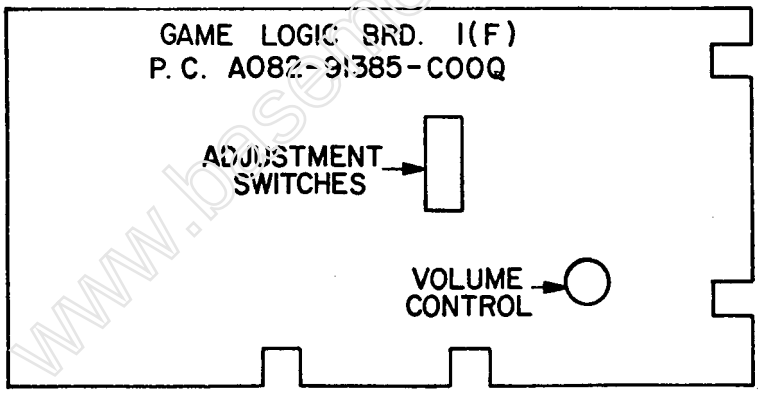

TO REMOVE CONTROL PANEL AND MONITOR DISPLAY GLASS

1. Open coin door.
2. Release two (2) clamps located below Control Panel on each side of cabinet.
3. Disconnect control panel jack.
4. Remove control panel.
5. Remove monitor display glass.

TEST SLIDE AND CREDIT PUSH BUTTON SWITCH

Located to right of cash box and is readily accessible by opening coin door. When placed in "ON" position, this switch indicates test mode. The credit push button switch is provided as a test aid and awards one credit without advancing coin meter.

www.basementarcade.com

GENERAL INSTRUCTIONS FOR RALLY-X COCKTAIL TABLE

INSTALLATION

1. Remove shipping cleats located on bottom of cabinet.
2. Install four (4) provided leg levelers to bottom of cabinet and level cabinet.
3. The power is controlled by a switch located on the bottom of the cabinet. Additional taps have been provided on the transformer to compensate for fluctuating line voltage.

LINE VOLTAGE SAFETY SWITCH

A line voltage safety switch has been provided for your protection. It is located in the cabinet on the left side of the coin door. When the coin door is opened the circuit to the line voltage is interrupted. To restore power (when servicing), pull switch fully out.

VOLUME CONTROL

The volume control pot is located on the Game Logic Board (P.C. A082-91385-C000). The pot controls the volume of all sounds and may be varied as desired by rotating pot control.

ADJUSTMENT SWITCHES

Located on Game Logic Board (P.C. A082-91385-C000) and may be adjusted as indicated on separate instruction card in back box area.

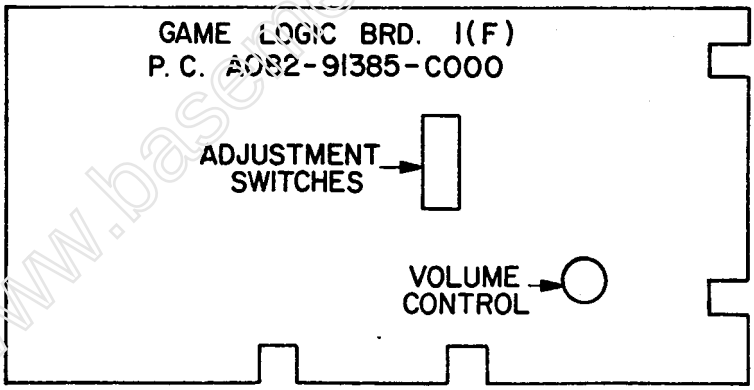

TEST SLIDE AND CREDIT PUSH BUTTON SWITCH

Located to the right of cash box and is readily accesssible by opening coin door. When placed in "ON" position, this switch indicates test mode. The credit push button switch is provided as a test aid and awards one credit without advancing coin meter.

www.basementarcade.com

TO SERVICE MONITOR, GAME BOARD AND TRANSFORMER ASSY.

1. Open coin box door and release two (2) clamps indicated on sketch below.
2. Grasp monitor mounting panel at "A" and open as indicated in sketch below.

Caution: Due to the weight of the monitor extreme care must be exercised when opening cabinet for service.

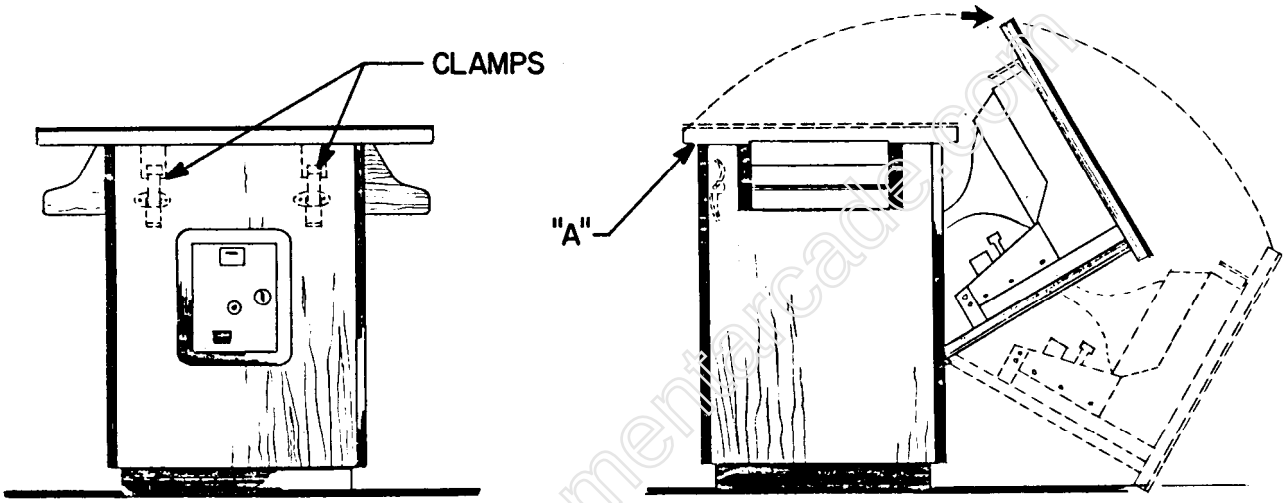

www.basementarcade.com

ELECTRICAL BULLETIN:

FOR ALL APPARATUS COVERED BY THE CANADIAN STANDARDS ASSOCIATION (CSA) STANDARD C22.2 NO. 1, WHICH EMPLOYS A SUPPLY CORD TERMINATED WITH A POLARIZED 2-PRONG ATTACHMENT PLUG.

CAUTION:

TO PREVENT ELECTRIC SHOCK DO NOT USE THIS (POLARIZED) PLUG WITH AN EXTENSION CORD, RECEPTACLE OR OTHER OUTLET UNLESS THE BLADES CAN BE FULLY INSERTED TO PREVENT BLADE EXPOSURE.

ATTENTION:

POUR PREVENIR LES CHOCS ELECTRIQUES NE PAS UTILISER CETTE FICHE POLARISEE AVEC UN PROLONGATEUR. UNE PRISE DE COURANT OU UNE AUTRE SORTIE DE COURANT, SAUF SI LES LAMES PEUVENT ETRE INSEREES A FOND SANS EN LAISSER AUCUNE PARTIE A DECOUVERT.

CAUTIONARY NOTES IN SETTING UP PROCEDURE

Care in Setting Up

1. Place machine a sufficient distance from the wall and on a strong, level surface.
2. Do not place in dusty or damp locations or where the sun's rays will beat directly on the machine. Also, in order to avoid the interior of the machine's overheating, do not place near heaters.
3. Do not place in front of emergency or fire exits or in front of locations where fire fighting equipment or extinguishers are stored.
4. Make sure the ground wire on machine is connected to the ground.
5. Check to see whether all of the connectors on the PC boards, etc. are connected.
6. Check if the electric power switch is turned "ON", and game is plugged in.

Caution after Setting Up

Be very careful when inspecting and checking the machine because there are places in the monitor with high electrical voltage.

Control circuits are all composed of IC's for long life, but on the other hand according to the way it is set up, these can be instantly destroyed; therefore, take special care with the following points:

1. Make sure the electric power is shut off when replacing parts or when removing connectors, etc.
2. PC board repairs are to be done by the seller — do not handle in any case. Above all else, never conduct test with the tester, etc. The voltage in the tester can ruin the IC's.
3. When connecting the connectors, be careful not to reverse the direction of the connectors.

   When shipping PC boards use plastic airmats or other such protective material.

   When pulling the electric power source, always hold the plug — never pull the cord.

Self-Test

The self-test is the same as the inspection of an automobile. If possible, it is best to do this each day. Rally-X has Self-Test capabilities and using the Test Switch most parts can be tested.

1. Automatic Self-Test
   When the power in Rally-X is turned on the Self-Test automatically begins. If there is no problem in the PC boards it will change automatically into the "Attract Mode", when there is a problem the Self-Test is repeated and the words "BAD RAM" or "BAD ROM" will appear on the screen. Even if the problem cannot be located, do not go on to other test switches or volume test, but carry out the Self-Test using the Test-Switch.

Note: When the problem has been located using the results of the Self-Test, contact the place of purchase of the machine.

2. Self-Test Using the Test Switch
   The slide switch on the opposite side when the selector switch is opened is the Test Switch. Turn the Test Switch "ON". The Self-Test will start (Normally this switch is OFF). The figures and words of the Test Mode will appear on the screen in 10 seconds.

www.basementarcade.com

RALLY-X TEST MODE

Game is in test mode for a moment immediately after power is turned on or when test switch is on. When test switch is returned to "OFF" the game goes into attract mode.

1. ROM TEST
   The ROM data are checked 4K bytes at a time, and then checked together over all. If there are irregularities, the screen will display, for example, "ROM 1" or the like, identifying the bad ROM by number. The test series will not proceed to the RAM test. When there are no irregularties, "ROM OK" will be displayed and the RAM test will then be performed. The character ROM is not checked.

The position of the ROMs on the PCB
as given by the ROM test message

Test Message	Position of ROM and PCB		
ROM 1	1B or 1C	1B	1D
ROM 2	1D or 1E	1D	
ROM 3	1H or 1J	1H	1K
ROM 4	1K or 1L	1K	
	MB8516 (EPROM)	UPD2332 TMM333	UPD2364

2. RAM TEST
   Each of the 12 ICCs numbered 2114 are checked and when any irregularity is found a message (e.g. RAM 1L) is displayed and the test series stops. If there are no irregularities tests of game sounds and switches can begin.
   The RAM test is performed only on ICCs numbered 2114

Position of RAMs on PCB
as given by test message

Test Message	Position of RAM on PCB
RAM 1L	6C
RAM 1H	6A
RAM 2L	6D
RAM 2H	6B
RAM 3L	6K
RAM 3H	6J
RAM 4L	6L
RAM 4H	6H
RAM 5L	6M
RAM 5H	6F
RAM 6L	6N
RAM 6H	6E

www.segementarcade.com

3. SWITCH & SOUND TEST

The following sounds are made when switches are depressed:

SWITCH	SOUND
Coin sw 1, 2	sound made when coin is deposited
service sw	service sound
1 player start	start music
2 players start	music played before challenging stage
plyr 1 cntrl sw up	fuel warning
plyr 1 cntrl sw down	sound made when fuel added to score
plyr 1 cntrl sw right	sound made when special check pt cleared
plyr 1 cntrl sw left	sound made when check pt cleared
plyr 1 cntrl sw smoke scrn	sound made when bonus car received
*plyr 2 cntrl sw up	sound made when one full pattern is cleared
*plyr 2 cntrl sw down	BGM
*plyr 2 cntrl sw right	crash noise
*plyr 2 cntrl sw left	high score noise
*plyr 2 cntrl sw smoke scrn	sound of car running

*Applies only to table model

If player one and player two's smoke screen buttons are depressed at the same time, the display flip-flops and the smoke screen sound is made.

If the test switch is pressed to off and back to on within one second while the smoke screen buttons are depressed, a cross-hatch pattern will appear. In the table model one edge and in the upright model two edges of the pattern will not appear.

www.basementarcade.com

SWITCH ADJUSTMENTS

METHOD OF PLAY (RALLY-X)

SW. #1	SW. #2	
OFF	OFF	1 COIN, 1 CREDIT
OFF	ON	1 COIN, 2 CREDIT
ON	OFF	2 COINS, 1 CREDIT
ON	ON	FREE PLAY

DIFFICULTY & NUMBER OF CARS PER CREDIT

SW. #3	SW. #4	SW. #5	
ON	ON	ON	LOW DIFF, 2 CARS
ON	ON	OFF	LOW DIFF, 3 CARS
ON	OFF	ON	MID DIFF, 1 CARS
ON	OFF	OFF	MID DIFF, 2 CARS
OFF	ON	ON	MID DIFF, 3 CARS
OFF	ON	OFF	HIGH DIFF, 1 CARS
OFF	OFF	ON	HIGH DIFF, 2 CARS
OFF	OFF	OFF	HIGH DIFF, 3 CARS

BONUS CARS

SW. #6	SW. #7	
ON	OFF	1 CAR GAME 10,000 PTS.
		2 CAR GAME 15,000 PTS.
		3 CAR GAME 20,000 PTS.
OFF	ON	1 CAR GAME 20,000 PTS.
		2 CAR GAME 30,000 PTS.
		3 CAR GAME 40,000 PTS.
OFF	OFF	1 CAR GAME 30,000 PTS.
		2 CAR GAME 40,000 PTS.
		3 CAR GAME 60,000 PTS.

SW. #8	
OFF	PLAY MODE
ON	LOCKS PICTURE

M051-00935-A014

www.baseballarcade.com

PLAYING INSTRUCTIONS

- 1 or 2 persons can play.
- By moving the control level, ''My Car'' (blue) can be moved up, down, right and left.
- Avoiding barriers, use a smoke screen on the pursuing red cars.
- With the help of the radar screen touch the check points, clear and continue on. There are 10 check points per round, one of which is the Special Check Point.
- Check Point points

When cleared	Points
1st	100
2nd	200
3rd	300
4th	400
5th	500
6th	600
7th	700
8th	800
9th	900
10th	1000

- When an accident occurs (hitting a barrier or red car) you must start over from the first 100 points.
- When the Special Check Point is cleared, the points accumulated up to that time are doubled (the screen shows X2). Of course when an accident occurs, this score is wiped out.
- Fuel.....''My Car'' starts off with a full tank (60 L.). When all check points are cleared, an additional 100 pts. is awarded for each 1 liter of fuel remaining. And, when a smoke screen is produced, the fuel decreases by 3 liters. When the fuel remaining reaches the 10 L. level, the fuel indicator turns red and a warning is sounded. When the gas is all used, the car's speed will gradually decrease and come to a stop.
- Challenging Stage - Rounds 3, 7, 11, 15....are ''Challenging'', here 8 red cars appear but cannot run until the fuel in ''My Car'' is used up. Because ''My Car'' runs at full speed, it's fuel is soon gone. Clear all check points before the blocking red cars can move. When this stage ends, starting with the next round the scene changes to city streets.

www.basementarcade.com

NO. 935 — RALLY-X UPRIGHT — PHOTOGRAPH

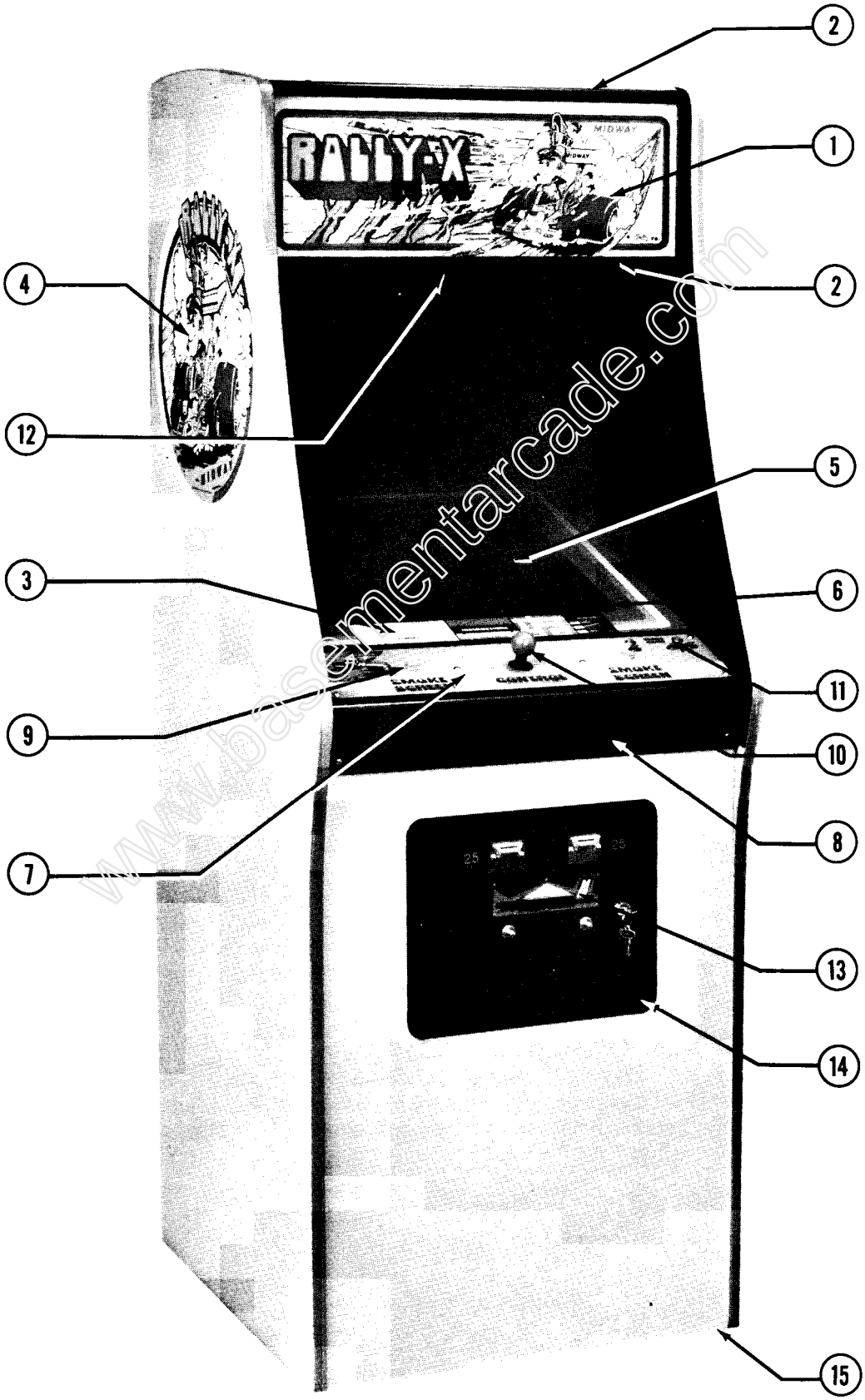

www.basementarcade.com

NO. 935 — RALLY-X UPRIGHT — PHOTOGRAPH

ORDER BY PART NUMBER ONLY

ITEM	PART Nº	DESCRIPTION
1	0935-00902-0000	DECORATIVE PLEXI - UPPER 23" x 9-1/16" x 3/16"
2	0866-00103-00XF	PLEXI RETAINING BRKT. (2 REQ'D.)
	0017-00101-0066	#10 x 5/8 PHIL. HD. SCR. (6 REQ'D.)
3	0935-00901-00XF	MAIN DISPLAY GLASS-TEMPERED 23" x 21-1/8" x 3/16"
4	0935-00905-0000	DECAL - SIDE OF CABINET (2 REQ'D)
5	0017-00003-0339	19" DUAL SYNC COLOR MONITOR - ELECTROHOME
6	A866-00064-0000	T.V. BEZEL & PLEXI ASSY.
7	0935-00900-0000	CONTROL SHELF OVERLAY
8	0935-00100-00XF	CONTROL PLATE
	0017-00101-0118	#8-32 x 1-1/8 CARRIAGE BOLT (6 REQ'D.)
	0017-00104-0022	#8 WASHER (6 REQ'D.)
	0017-00103-0061	#8-32 HEX NUT W/SEMS (6 REQ'D.)
	0017-00101-0065	#6 x 1/2 PHIL. TRS. HD. SCR. (2 REQ'D.)
9	A855-00016-0000	PUSH BUTTON ASSY. (2 REQ'D.)
10	A932-00008-0000	CONTROL ASSY.
11	0017-00032-0051	SMALL RED SWITCH BUTTON W/HARDWARE (2 REQ'D.)
12	0017-00003-0187	6" x 9" SPEAKER, 8 OHM, 9W.
	0017-00009-0393	BLACK SPEAKER GRILL W/4, 1-1/2" SCREWS
13	0151-00055-0100	DOUBLE ENTRY COIN DOOR ASSY.
14	0090-00002-02BK	COIN DOOR FRAME
	0017-00101-0121	#6-32 x 5/16 PHIL. TRS. HD. SCR. (3 REQ'D.) (MOUNTS COIN DOOR TO FRAME)
15	0017-00102-0048	3/8-16 x 2" LEG LEVELERS (4 REQ'D.)
	0017-00103-0026	3/8-16 LEG LEVELER HEX NUTS (4 REQ'D.)
		NOT SHOWN LIST
	A866-00068-0000	DISPLAY LAMP BRKT. ASSY. (BEHIND ITEM #1)
	0017-00003-0135	LAMP SOCKET (2 REQ'D.)
	0017-00003-0309	LAMP 12V., 25W. (2 REQ'D.)
	0017-00101-0626	#8-32 x 3/4 SLT. PAN HD. M.S. (4 REQ'D.)
	0017-00103-0061	#8-32 HEX NUT W/SEMS (4 REQ'D.)
	0017-00101-0025	#8 x 1/2 SLT. HEX HD. BLK. WD. SCR. (4 REQ'D.)
	0017-00009-0033	BASSICK CLAMP (2 REQ'D.)
	0603-00131-0000	STRIKE (2 REQ'D.)
	0017-00101-0028	#8 x 3/4 SLT. HEX. HD SCR. (4 REQ'D. CLAMP, 4 REQ'D. STRIKE)
	0935-00906-0100	KICK PLATE (BASE OF CABINET)
	0935-00907-0000	DECAL - (CABINET FRONT)

NO. 935 — RALLY-X UPRIGHT — INTERIOR ACCESS PICTURE

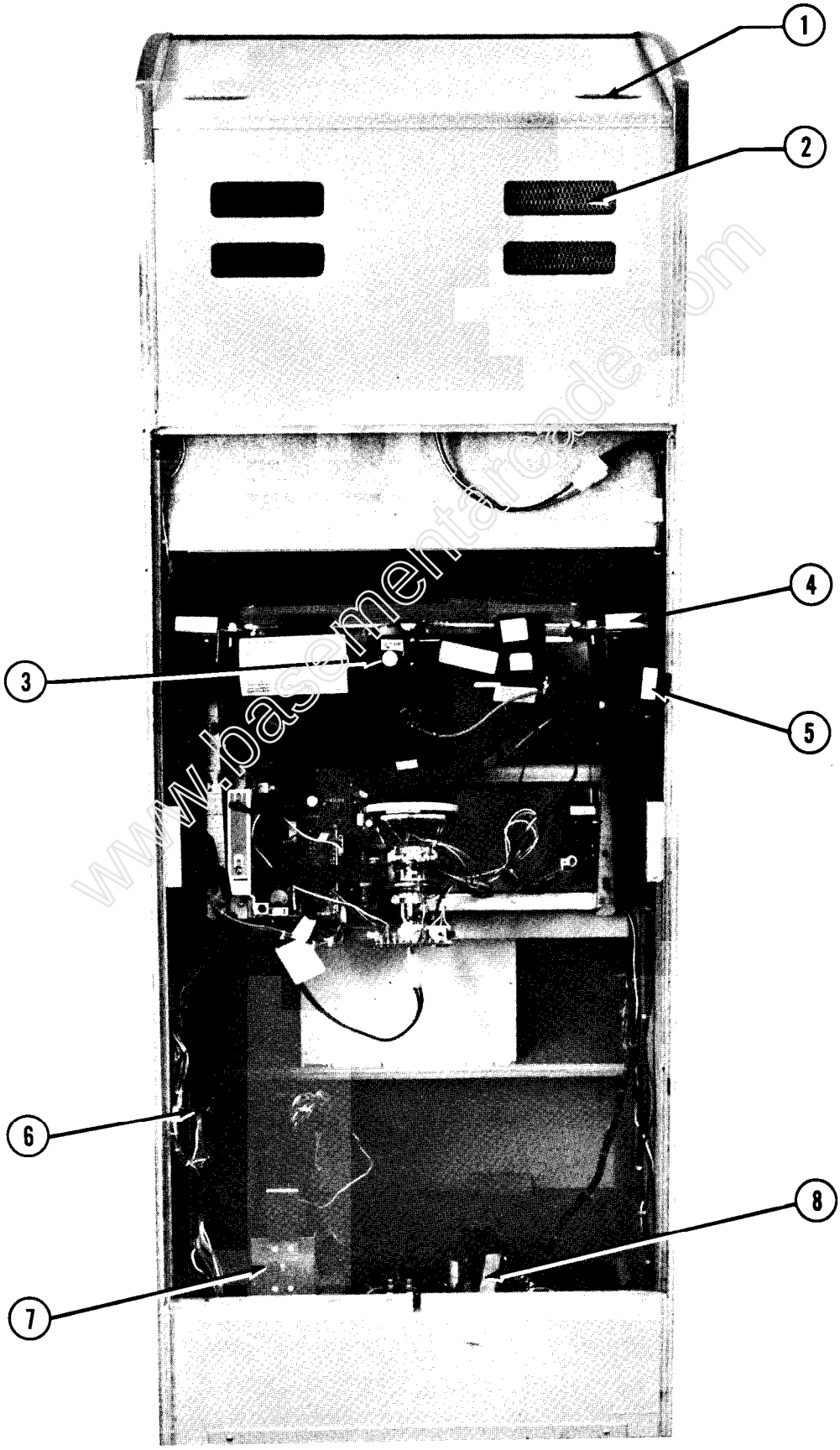

www.basementarcade.com

NO. 935 — RALLY-X UPRIGHT — INTERIOR ACCESS PICTURE

ORDER BY PART NUMBER ONLY

ITEM	PART Nº	DESCRIPTION
1	0586-00036-0000	ON/OFF SWITCH
	0567-00106-0100	SWITCH MTG. BRKT.
	0017-00101-0028	#8 x 3/4 SLT. HEX HD. WD. SCR. (4 REQ'D.)
2	0017-00009-0490	5-5/8" SQ. VENT GRILL (2 REQ'D.)
3	A935-00006-0000	ELECTROHOME - 19" COLOR MONITOR W/CHASSIS, DUAL SYNC HORIZONTAL TUBE (OR)
3	0017-00003-0354	WELLS-GARDNER - 19" COLOR MONITOR W/CHASSIS, DUAL SYNC HORIZONTAL TUBE
4	0935-00101-0000	MONITOR MTG. BRKT. (2 REQ'D.)
	0017-00102-0066	1/4-20 x 1-1/4 UNSLOTTED FIN. HEX HD. BOLT (4 REQ'D.)
	0017-00104-0005	SPLIT WASHER (4 REQ'D.)
5	0017-00032-0071	INTERLOCK SWITCH
	A866-00035-00XF	INTERLOCK SWITCH BRKT. ASSY.
6	A084-90414-C935	POWER SUPPLY ASSEMBLY
	0624-00902-0100	P.C. SUPPORT BRKT. - 12" (2 REQ'D.)
	0624-00902-0200	P.C. SUPPORT BRKT. - 6-1/2" (2 REQ'D.)
	0017-00101-0027	#8 x 3/4 SLT. HEX HD. SCREW (10 REQ'D.)
	0017-00104-0037	#8 FLAT WASHER (10 REQ'D.)
7	A935-00008-0000	CARD RACK ASSEMBLY
8	A935-00007-0000	TRANSFORMER BOARD ASSEMBLY
		ADDITIONAL PARTS LIST
	0017-00009-0477	CASH BOX - MOLDED
	A905-00026-0000	CASH BOX COVER ASSY.
	A624-00001-0000	CASH BOX GUIDE BRKT. ASSY.
	0624-00101-0000	CASH BOX SIDE CHANNEL
	0017-00101-0628	#8-32 x 3/4 CARRIAGE BOLT (4 REQ'D.)
	0017-00104-0022	#8 WASHER (4 REQ'D.)
	0017-00103-0061	#8-32 HEX NUT W/SEMS (4 REQ'D.)
	A151-00029-0000	LOCK ASSY. - BACK DOOR
	0017-00004-0022	304 DYMAX STRAP
	A866-00036-0000	TEST SWITCH & BRKT. ASSY.
	0866-00126-0000	MONITOR BRKT. (4 REQ'D.)

NO. 937 — RALLY-X MINI — PHOTOGRAPH

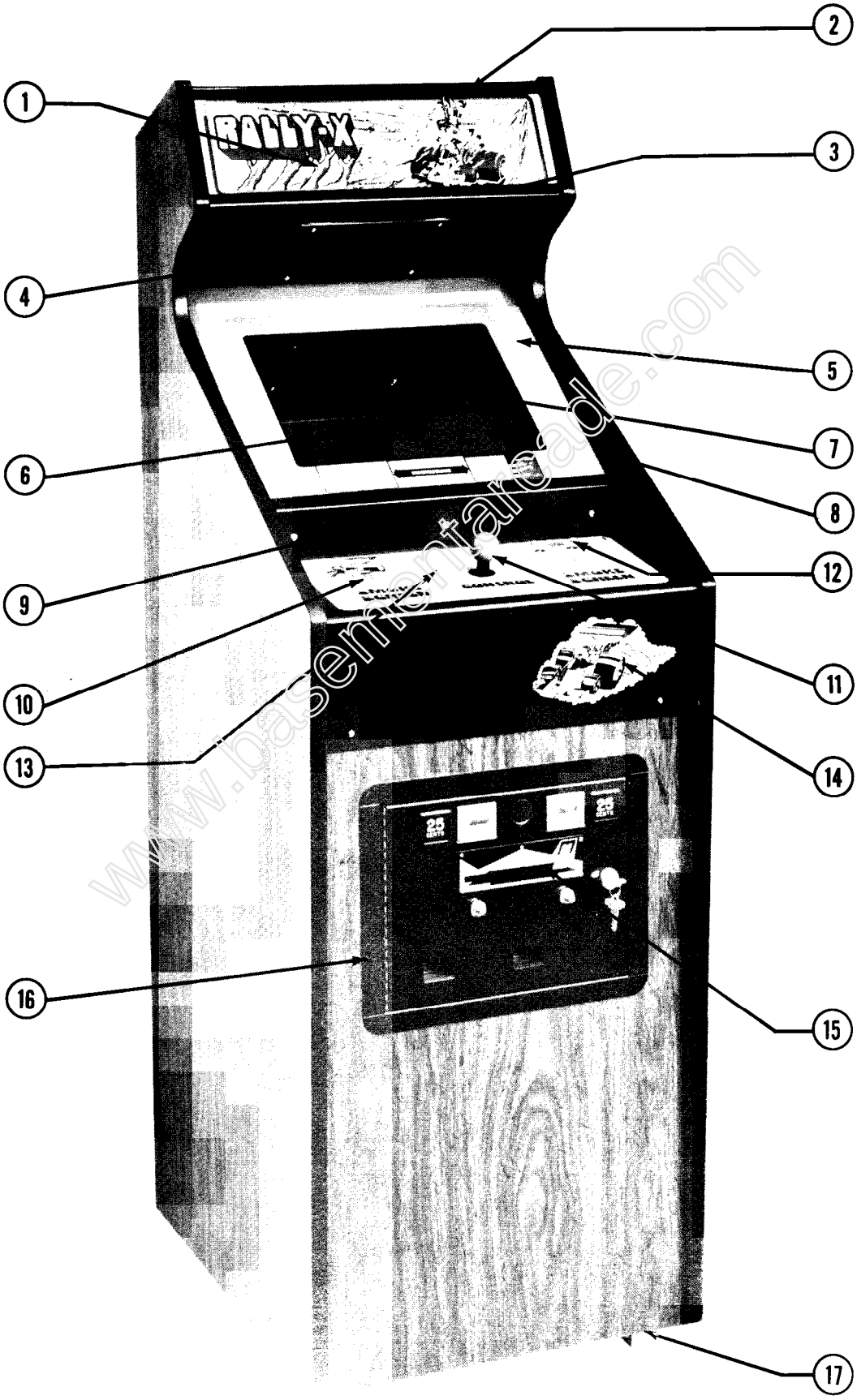

www.basementarcade.com

ORDER BY PART NUMBER ONLY

ITEM	PART Nº	DESCRIPTION
1	0937-00901-00XF	UPPER DISPLAY PLEXI - 17-15/16" x 5-3/4" x 3/16"
	A905-00014-0000	INSERT ASSEMBLY
	0017-00003-0219	#194 WEDGE BASE LAMP 14V., 27A (5 REQ'D.)
	0017-00031-0030	LIGHT SOCKET (5 REQ'D.)
2	0905-00115-00XF	TOP BRKT.
3	0905-00116-00XF	BOTTOM BRKT.
	0017-00101-0117	#8 x 5/8 PHIL. TRS. HD. SCR. (3 REQ'D. TOP, 3 REQ'D. BOTTOM)
4	0017-00009-0393	BLACK SPEAKER GRILL W/A - 1-1/2" SCREWS
	A762-00028-0000	6" x 9" SPEAKER ASSY. W/CABLE, 8 OHM, 7W.
	0017-00101-0642	#8-32 x 1-1/2" CARRIAGE BOLT (4 REQ'D.)
	0017-00103-0061	#8-32 HEX NUT W/SEMS (4 REQ'D.)
	0017-00104-0022	#8 FLAT STL. WASHER (4 REQ'D.)
5	A937-00005-0000	MAIN GLASS ASSY. - 17-13/16" x 13-1/8" x 3/16"
6	0017-00003-0340	13" COLOR MONITOR DUAL SYNC HORIZONTAL MTG. - ELECTROHOME
7	A937-00006-0000	T.V. BEZEL ASSY.
8	0905-00903-0100	GLASS CHANNEL - 14-1/2" LG. (2 REQ'D.)
9	0905-00102-00XF	GLASS CLAMPING PLATE
	0017-00101-0639	#8-32 x 1-1/4 CARRIAGE BOLT (3 REQ'D.)
	0017-00104-0037	#8 WASHER (3 REQ'D.)
	0017-00103-0009	#8-32 WING NUT (3 REQ'D.)
10	A855-00016-0000	PUSH BUTTON ASSY. (2 REQ'D.)
11	A932-00008-0000	CONTROL ASSEMBLY
12	0017-00032-0051	SMALL RED SWITCH BUTTON W/HARDWARE (2 REQ'D.)
13	0937-00902-0000	DECORATIVE CONTROL SHELF OVERLAY
14	0937-00100-00XF	CONTROL PLATE
	0017-00101-0118	#8-32 x 1-1/8 CARRIAGE BOLT (6 REQ'D.)
	0017-00104-0022	#8 WASHER (6 REQ'D.)
	0017-00103-0061	#8-32 HEX NUT W/SEMS (6 REQ'D.)
	0017-00101-0065	#6 x 1/2 PHIL. TRS. HD. SCR. (2 REQ'D.)
15	0151-00055-0100	DOUBLE ENTRY COIN DOOR ASSY.
16	0090-00002-02BK	COIN DOOR FRAME
	0017-00101-0121	#6-32 x 5/16 PHIL. TRS. HD. SCR. (3 REQ'D.) (MOUNTS COIN DOOR TO FRAME)
17	0017-00102-0048	3/8-16 x 2" LEG LEVELERS (4 REQ'D.)
	0017-00103-0026	3/8-16 LEG LEVELER HEX NUTS (4 REQ'D.)

NO. 937 — RALLY-X MINI — INTERIOR ACCESS PICTURE

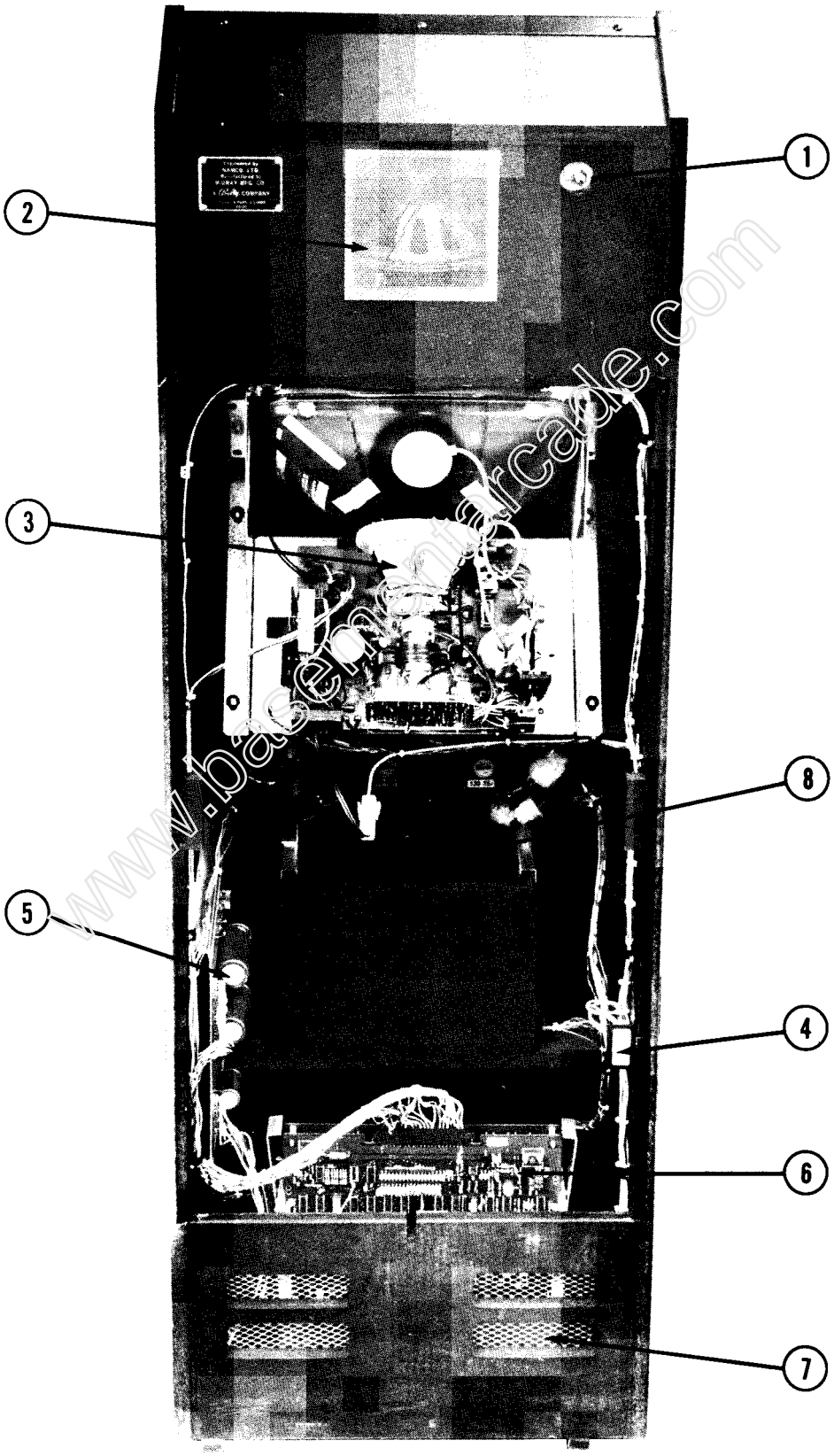

www.basementarcade.com

NO. 937 — RALLY-X MINI — INTERIOR ACCESS PICTURE

ORDER BY PART NUMBER ONLY

ITEM	PART Nº	DESCRIPTION
1	0017-00032-0083	ON/OFF SWITCH
	0567-00106-0100	ON/OFF SWITCH PLATE
2	A762-00028-0000	6" x 9" SPEAKER ASSY. W/CABLE, 8 OHM, 7W.
	0618-00117-00XF	VENT GRILL
	0017-00101-0015	#6 x 1/2 SLT. HEX HD. SCR. (4 REQ'D.)
3	0017-00003-0340	13" COLOR DUAL SYNC HORIZONTAL MONITOR & CHASSIS - ELECTROHOME
	0017-00102-0013	1/4-20 x 1-1/4 CARRIAGE BOLT (4 REQ'D.)
	0017-00104-0014	PERIPHERY WASHER (4 REQ'D.)
	0017-00103-0018	1/4-20 HEX NUT (4 REQ'D.)
4	0017-00032-0071	INTERLOCK SWITCH
	A866-00035-00XF	INTERLOCK SW. BRKT. ASSY.
5	A084-90414-C935	POWER SUPPLY ASSEMBLY
	0624-00902-0100	P.C. SUPPORT BRKT. - 12" (2 REQ'D.)
	0624-00902-0200	P.C. SUPPORT BRKT. - 6-1/2 (2 REQ'D.)
	0017-00101-0027	#8 x 3/4 SLT. HEX HD. SCREW (10 REQ'D.)
	0017-00104-0037	#8 FLAT WASHER (10 REQ'D.)
6	A935-00008-0000	CARD RACK ASSY.
	A935-00011-0000	TRANSFORMER BOARD ASSY. - NOT SHOWN LOCATED BEHIND CARD RACK ASSY.
7	0017-00009-0490	5-5/8" SQ. VENT GRILL (2 REQ'D.)
8	A905-00028-0000	CASH BOX ASSY. W/HANDLE
	A905-00026-0000	CASH BOX COVER ASSY.
	A624-00001-0000	CASH BOX GUIDE BRKT. ASSY.
	0624-00001-0000	CASH BOX GUIDE BRKT.
	0017-00101-0628	#8-32 x 3/4 CARRIAGE BOLT (4 REQ'D.)
	0017-00104-0022	#8 WASHER (4 REQ'D.)
	0017-00103-0061	#8-32 LOCK NUT W/SEMS (4 REQ'D.)
		ADDITIONAL PARTS
	A151-00029-0000	LOCK ASSY. - BACK DOOR
	0017-00004-0022	304 DYMAX STRAP
	0017-00009-0033	LATCH CLAMP (2 REQ'D.)
	0603-00131-00XF	STRIKE
	0017-00101-0028	#8 x 3/4 SLT. HEX HD. SCR. (4 REQ'D. CLAMP, 4 REQ'D. STRIKE)
	0597-00124-00B0	BACK DOOR CUP
	0017-00101-0129	#10-32 x 1" CARRIAGE BOLT (3 REQ'D.)
	0017-00103-0081	#10-32 HEX NUT W/SEMS (3 REQ'D.)
	A866-00036-0000	TEST SWITCH & BRKT. ASSY.

NO. 936 — RALLY-X COCKTAIL — PHOTOGRAPH

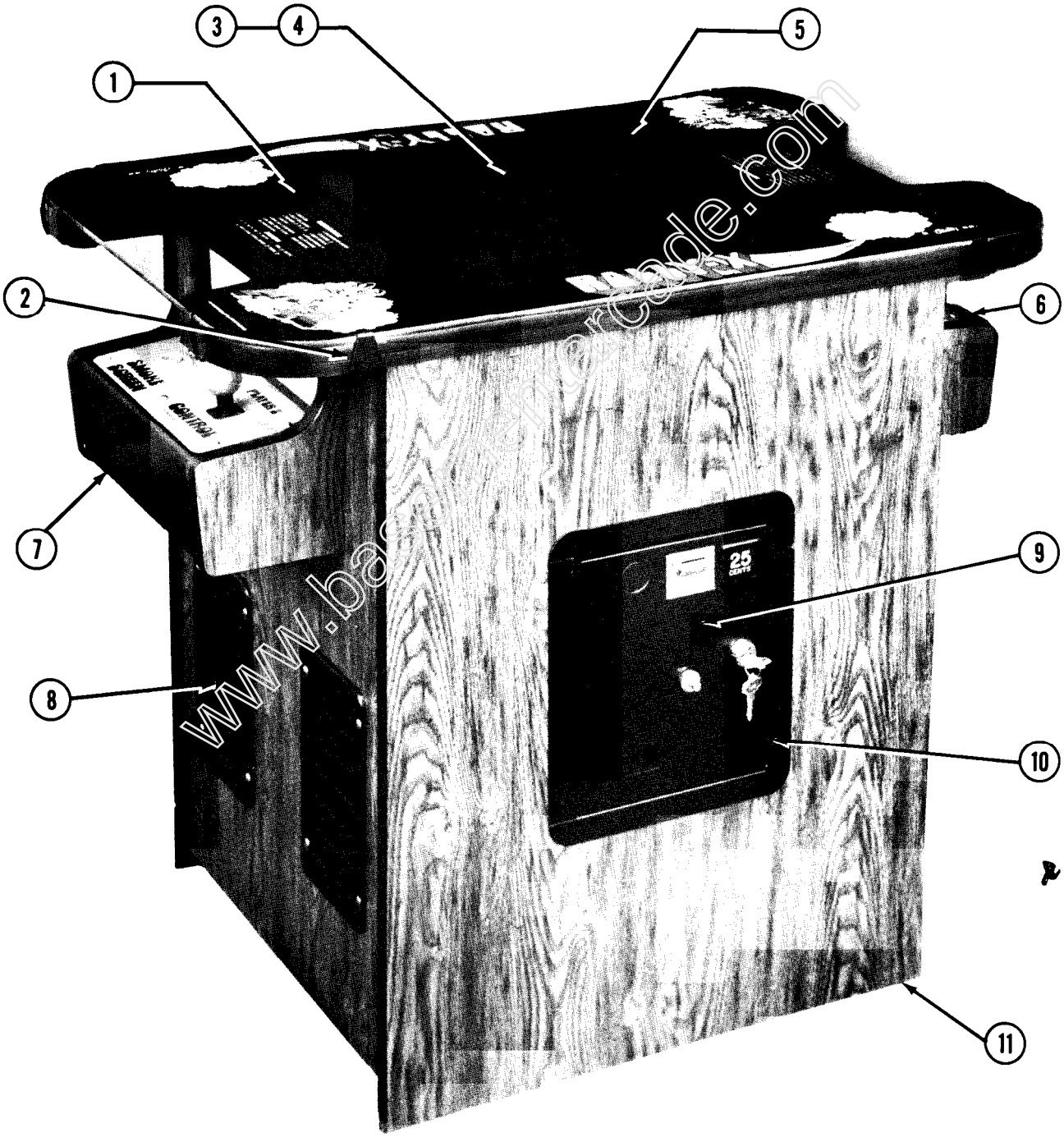

www.barcadecade.com

NO. 936 — RALLY-X COCKTAIL — PHOTOGRAPH

ORDER BY PART NUMBER ONLY

ITEM	PART Nº	DESCRIPTION
1	0936-00902-0000	COVER GLASS - 32'' x 22'' x 1/4''
2	0775-00104-00XF	GLASS CLIPS (8 REQ'D.)
	0017-00101-0117	#8 x 5/8 PHIL. TRS. HD. SCR. (16 REQ'D.)
3	0017-00003-0334	19'' DUAL SYNC COLOR MONITOR - ELECTROHOME
4	0936-00903-0000	PLEXI - GLASS
5	0921-00901-0000	T.V. BEZEL
6	A936-00004-0000	CONTROL SHELF ASSY. - PLAYER #1
7	A936-00005-0000	CONTROL SHELF ASSY. - PLAYER #2
8	0017-00009-0393	BLACK SPEAKER GRILL (4 REQ'D.)
	0017-00101-0639	#8-32 x 1-1/2 CARRIAGE BOLT (16 REQ'D.)
	0017-00103-0061	#8-32 HEX NUT W/SEMS (16 REQ'D.)
9	0151-00055-0200	SINGLE ENTRY COIN DOOR ASSY.
10	0090-00002-01BK	COIN DOOR FRAME
	0017-00101-0121	#6-32 x 5/16 PHIL. TRS. HD. SCR. (3 REQ'D.)
11	0017-00102-0048	3/8-16 x 2'' LEG LEVELERS (4 REQ'D.)
	0017-00103-0026	3/8-16 LEG LEVELER HEX NUTS (4 REQ'D.)
	G927-00005-0000	COCKTAIL TABLE - HIGH BASE - LEG KIT INCLUDING WHIZ BOLTS, WASHERS & LEGS (4 REQ'D.) (OPTIONAL)
		NOT SHOWN LIST
	0610-00132-0000	STRIKE (2 REQ'D.)
	0017-00101-0028	#8 x 3/4 HEX HD. S.M.S. (4 REQ'D.)
	0017-00009-0033	BASSICK CLAMP (4 REQ'D.)
	0017-00101-0026	#8 x 5/8 HEX HD. S.M.S. (4 REQ'D.)
	A749-00003-0000	COIN BOX ASSY.
	A627-00056-0000	COIN BOX COVER ASSY.
	A625-00024-0000	COIN BOX GUIDE BRKT. ASSY.
	0625-00117-0000	COIN BOX SIDE CHANNEL
	0017-00101-0628	#8-32 x 3/4 CARRIAGE BOLT (4 REQ'D.)
	0017-00103-0008	#8-32 HEX NUT (4 REQ'D.)
	0017-00004-0022	304 DYMAX STRAP
	A749-00005-0000	INTERLOCK SWITCH ASSY.
	A866-00036-0000	TEST SW. & BRKT. ASSY.

www.basementarcade.com

NO. 936 — RALLY-X COCKTAIL — INTERIOR ACCESS PICTURE

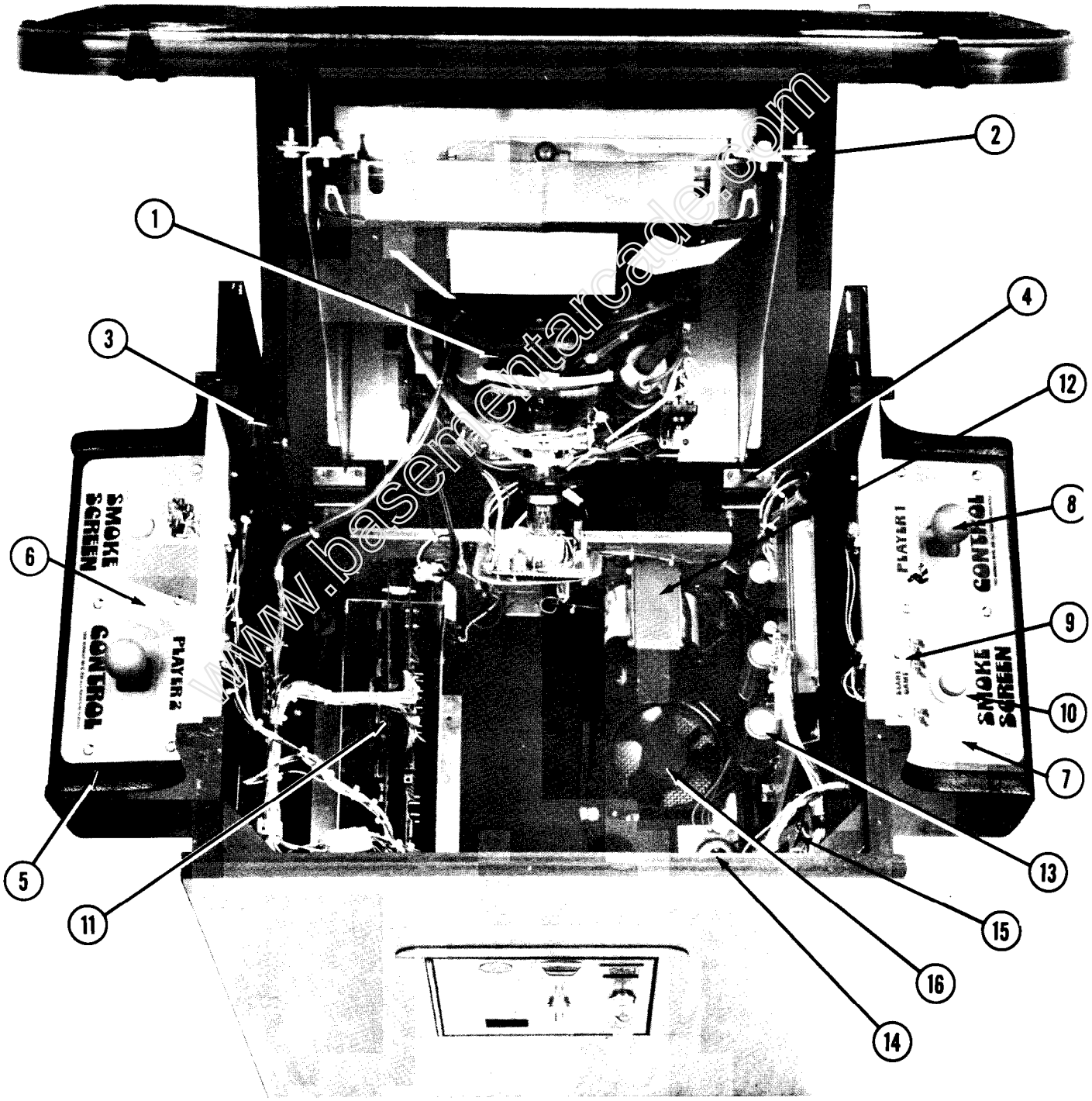

www.basementarcade.com

ORDER BY PART NUMBER ONLY

ITEM	PART Nº	DESCRIPTION
1	0017-00003-0334	19" DUAL SYNC VERTICAL COLOR MONITOR & CHASSIS - ELECTROHOME
2	A921-00010-00XF	MONITOR MTG. BRKT. ASSY. (2 REQ'D.)
	0017-00101-0642	#8-32 x 1-1/2 CARRIAGE BOLT (4 REQ'D.)
	0017-00104-0031	#8 FLAT WASHER (4 REQ'D.)
	0017-00103-0061	#8-32 HEX NUT W/SEMS (4 REQ'D.)
3	A889-00017-0000	LATCH SLIDE ASSY. (TABLE TOP PROP)
4	0017-00009-0495	2" HINGE (2 REQ'D.)
	0017-00101-0639	#8-32 x 1-1/4 CARRIAGE BOLT (8 REQ'D.)
	0017-00103-0061	#8-32 HEX NUT W/SEMS (8 REQ'D.)
5	0927-00100-00XF	CONTROL PANEL (2 REQ'D.)
6	0936-00900-0000	DECORATIVE OVERLAY - PLAYER #2
7	0936-00901-0000	DECORATIVE OVERLAY - PLAYER #1
	0017-00101-0620	#8-32 x 1/2 CARRIAGE BOLT (4 REQ'D. EACH FOR PLAYER #1 & #2)
	0017-00104-0022	#8 FLAT WASHER (4 REQ'D. EACH FOR PLAYER #1 & #2)
	0017-00103-0061	#8-32 HEX NUT W/SEMS (4 REQ'D. EACH FOR PLAYER #1 & #2)
	0017-00101-0341	#6 x 1/4 PHIL. TRS. HD. SCR. (2 REQ'D. EACH FOR PLAYER #1 & #2)
8	A932-00008-0000	CONTROL ASSY. (2 REQ'D.)
9	0017-00032-0051	SMALL RED SWITCH BUTTON (2 REQ'D.) - (PLAYER #1 SIDE ONLY)
10	A855-00016-0000	PUSH BUTTON ASSY. (2 REQ'D.)
11	A935-00008-0000	CARD RACK ASSY.
12	A936-00011-0000	TRANSFORMER BOARD ASSY.
13	A084-90414-C935	POWER SUPPLY ASSY.
	0624-00902-0100	P.C. SUPPORT BRKT. - 12" (3 REQ'D.)
	0017-00101-0017	#6 x 1/2 SLT. HEX HD. SCR. (9 REQ'D.)
	0017-00104-0031	STL. WASHER (9 REQ'D.)
14	0017-00032-0083	ON/OFF SWITCH 120V, 6A.
	0567-00106-0100	ON/OFF SWITCH MTG. PLATE
15	0017-00003-0187	6" x 9" SPEAKER 8 OHM, 9W.
16	A775-00013-0000	FAN ASSY. (NEXT 7 PART NO'S)
	0017-00003-0222	FAN
	0775-00110-00XF	FAN PLATE
	0870-00100-00XF	VENT SCREEN
	0017-00101-0347	#6-32 x 1/2 PHIL. R.H.M.S. SEMS (4 REQ'D.)
	0017-00104-0009	#6 EXT. WASHER (4 REQ'D.)
	0017-00103-0005	#6-32 HEX NUT (4 REQ'D.)
	0017-00101-0026	#8 x 5/8 SLOT. HEX HD. S.M.S. (4 REQ'D.)

NO. 936 — RALLY-X COCKTAIL — CONTROL SHELF ASSEMBLY

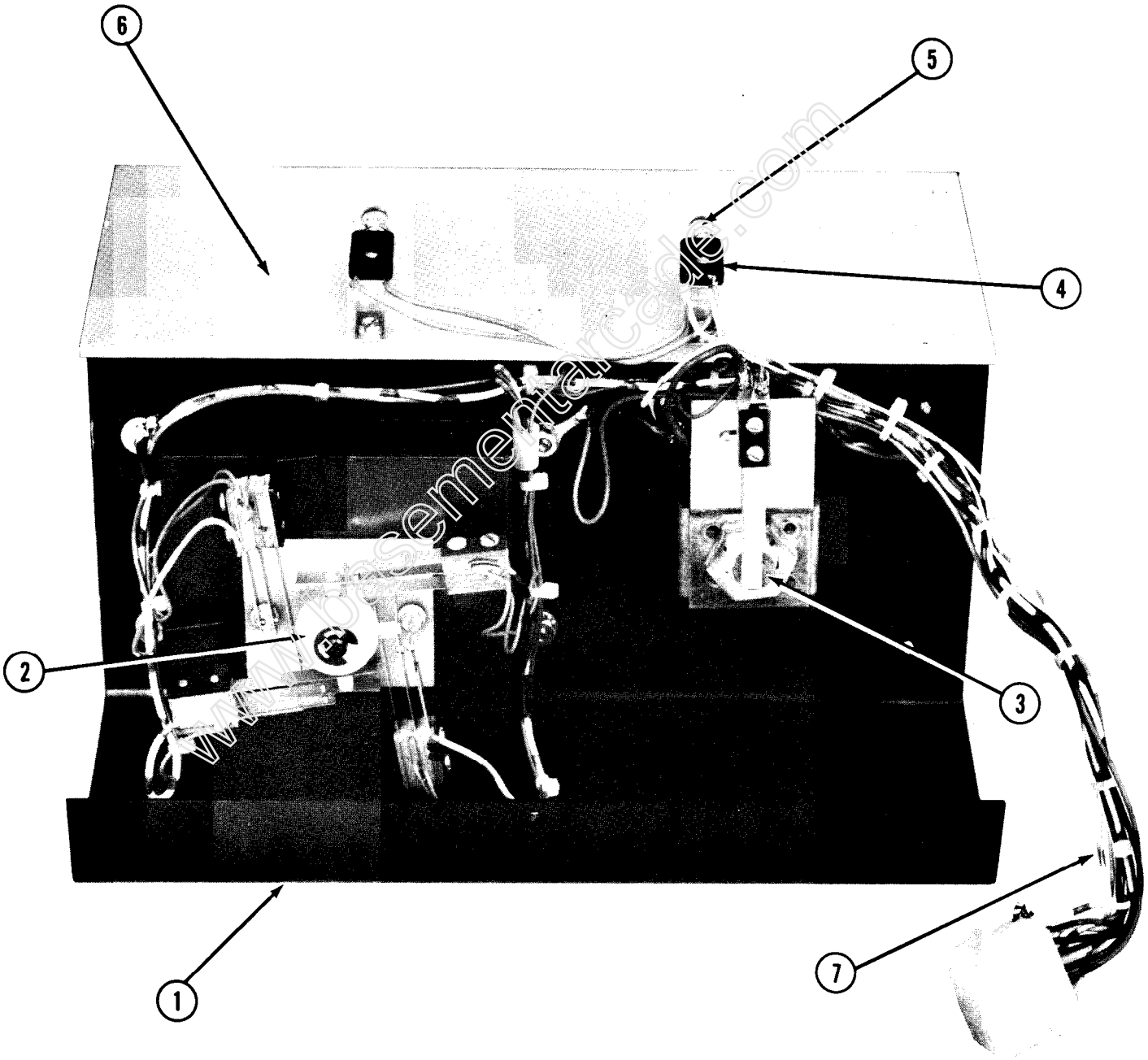

NO. 936 — RALLY-X COCKTAIL — CONTROL SHELF ASSEMBLY

ORDER BY PART NUMBER ONLY

ITEM	PART Nº	DESCRIPTION
1	0927-00100-00XF	CONTROL PANEL
2	A932-00008-0000	CONTROL ASSEMBLY - SEE SEPERATE DETAIL
3	A855-00016-0000	PUSH BUTTON ASSY. -SEE SEPERATE DETAIL
4	0017-00031-0044	WEDGE BASE LAMP SOCKET (2 REQ'D. PER CONTROL)
	0017-00101-0555	#6-32 x 5/16 SLT. HEX HD. SCR. (2 REQ'D. PER CONTROL)
5	0017-00003-0219	#194 WEDGE LAMP 14V., .27A. (2 REQ'D. PER CONTROL)
6	0921-00903-0000	LIGHT SHIELD
7	A936-00006-0000	CONTROL SHELF CABLE ASSY. - PLAYER #1
	A936-00007-0000	CONTROL SHELF CABLE ASSY. - PLAYER #2

www.basementarcade.com

RALLY-X — CARD RACK ASSEMBLY

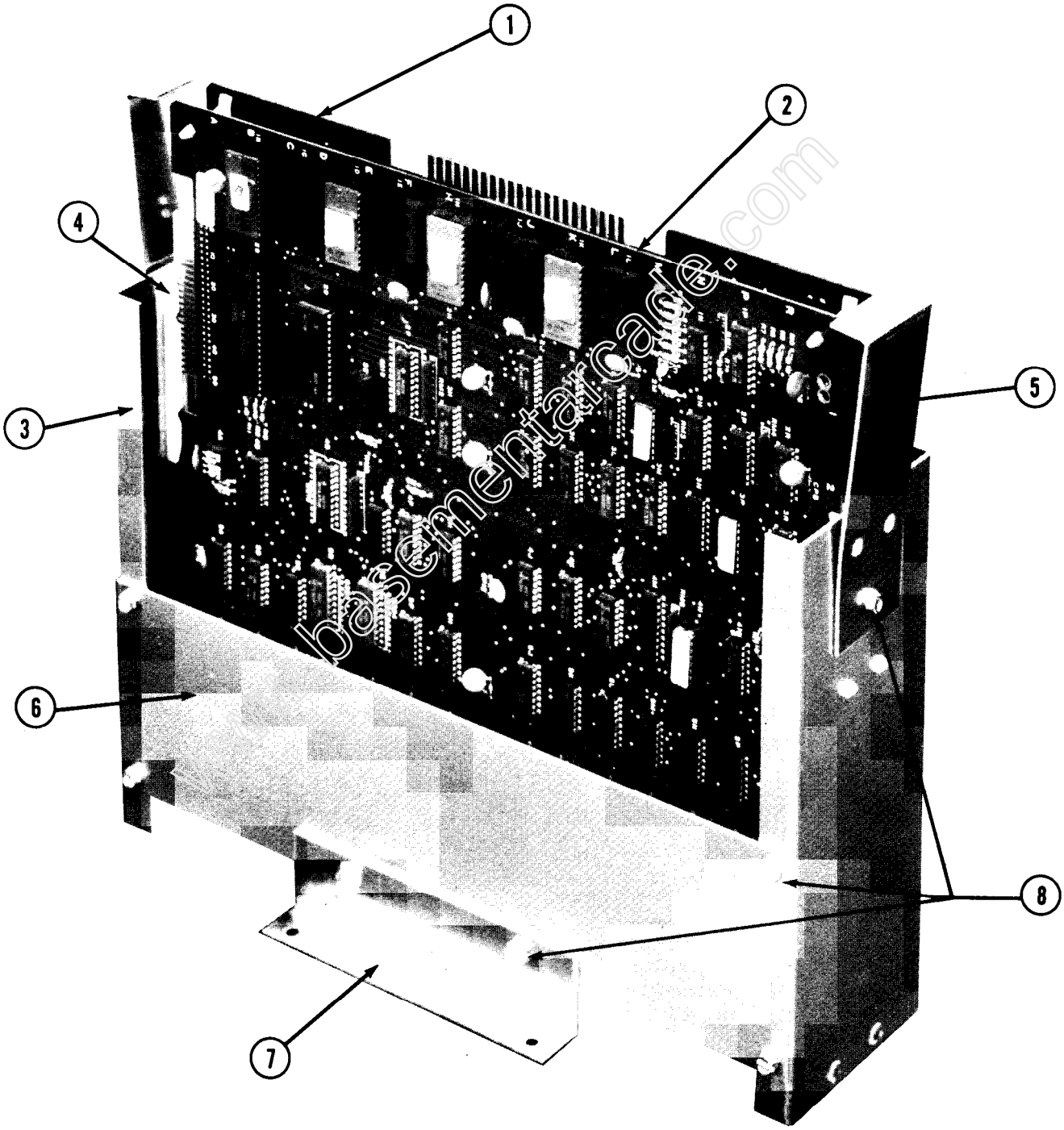

basementarcade.com

RALLY-X — CARD RACK ASSEMBLY

ORDER BY PART NUMBER ONLY

ITEM	PART Nº	DESCRIPTION
1	A082-91385-C000	GAME LOGIC BOARD ASSY. - BOARD #1
2	A082-91387-C000	GAME LOGIC BOARD ASSY. - BOARD #2
3	A935-00015-0000	HOLDER PLATE & STOP ASSY. (2 REQ'D.)
4	0017-00009-0478	NYLON GUIDE (4 REQ'D.)
5	0935-00105-0000	RETAINER (2 REQ'D.)
6	0935-00103-0000	SIDE SUPPORT (2 REQ'D.)
7	0935-00102-0000	MOUNTING BRACKET (2 REQ'D.)
8	0017-00101-0096	#6 x 3/8 SLT. HEX HD. SCR. (14 REQ'D.)

www.basementarcade.com

RALLY-X — CONTROL ASSEMBLY

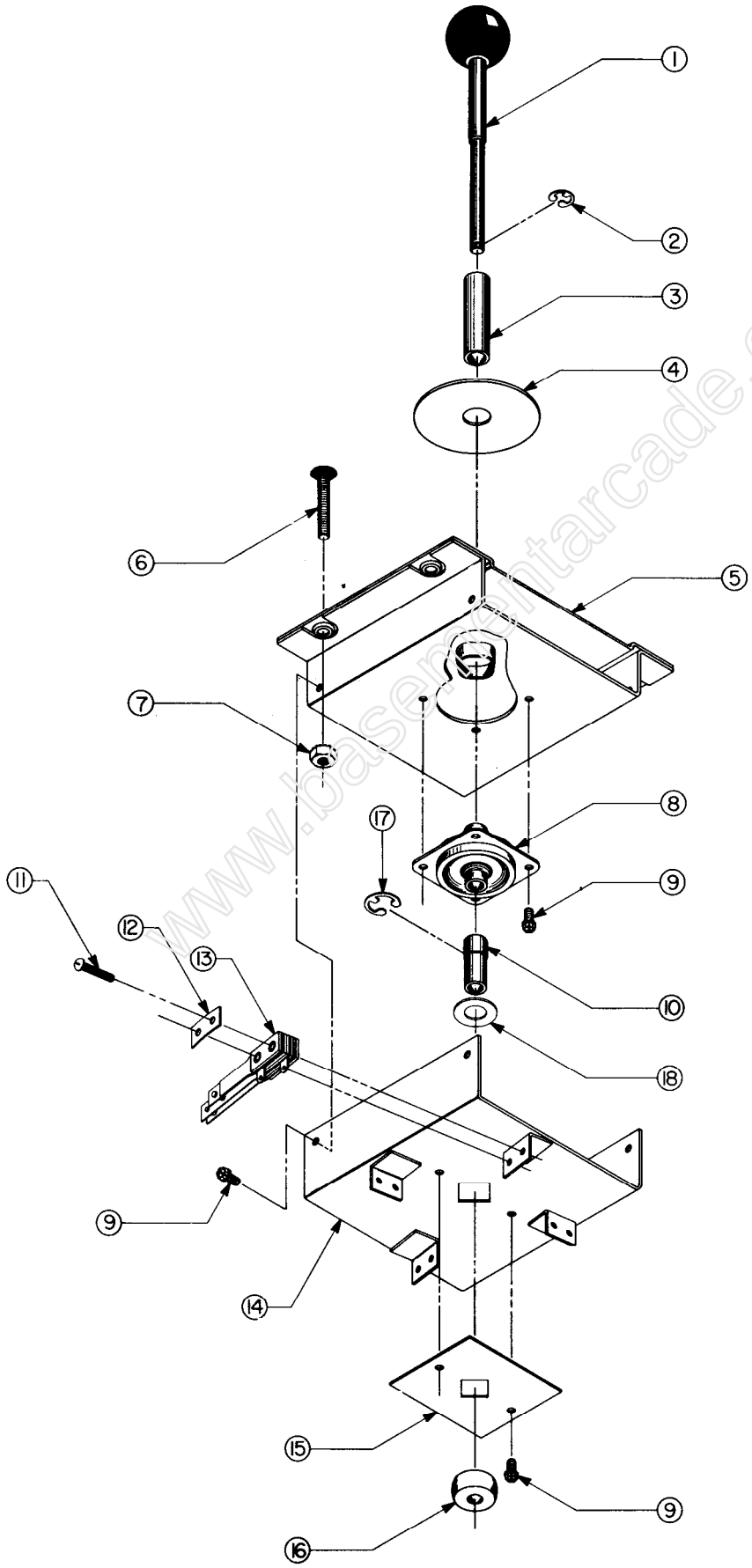

www.basementarcade.com

RALLY-X — CONTROL ASSEMBLY

ORDER BY PART NUMBER ONLY

ITEM	PART Nº	DESCRIPTION
1	A932-00022-0000	SHAFT & BALL ASSY.
2	0017-00100-0025	1/4" E-RING
3	0921-00702-0000	STOP SPACER
4	0921-00902-0000	SLIDE PLATE
5	A932-00011-00XF	SPOT WELD ASSY.
6	0017-00101-0713	#8-32 x 1" SLT. FLAT HD. SCREW (4 REQ'D.)
7	0017-00103-0061	#8-32 HEX NUT W/SEMS (4 REQ'D.)
8	0932-00902-0000	GROMMET
9	0017-00101-0598	#8-32 x 5/16 SLT. HEX HD. M.S. (10 REQ'D.)
10	0921-00701-0000	SLEEVE
11	0017-00101-0528	#5-40 x 3/4 SLT. RND. HD. SCR. (8 REQ'D.)
12	0020-00202-0000	SWITCH PLATE (4 REQ'D.)
13	A932-00009-0000	SWITCH ASSEMBLY (4 REQ'D.)
14	A932-00012-00XF	STOP PLATE & SWITCH BRKT. ASSY.
15	0932-00904-0000	WEAR PLATE
16	0921-00700-0000	ACTUATOR
17	0017-00100-0115	7/16" E-RING
18	0017-00104-0111	NYLON FLAT WASHER

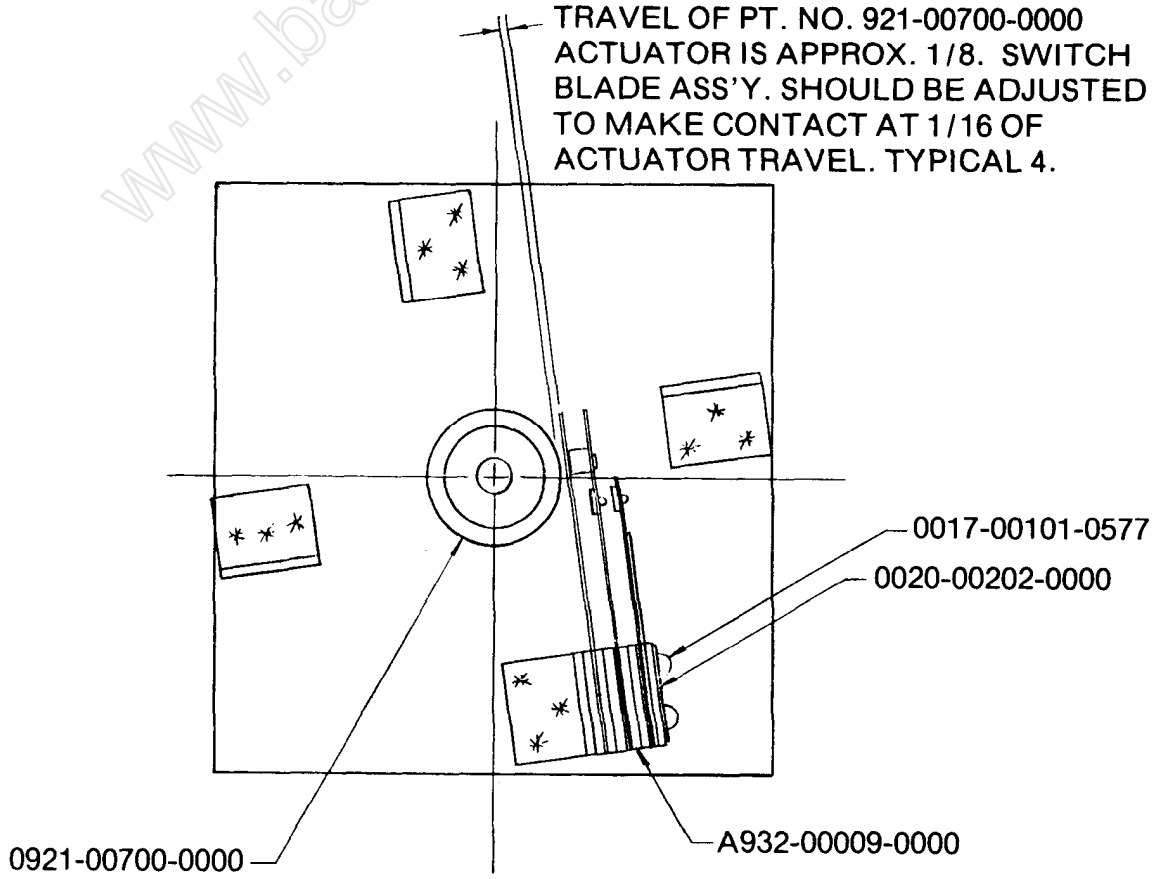

www.basementarcade.com

RALLY-X — PUSH BUTTON ASSEMBLY

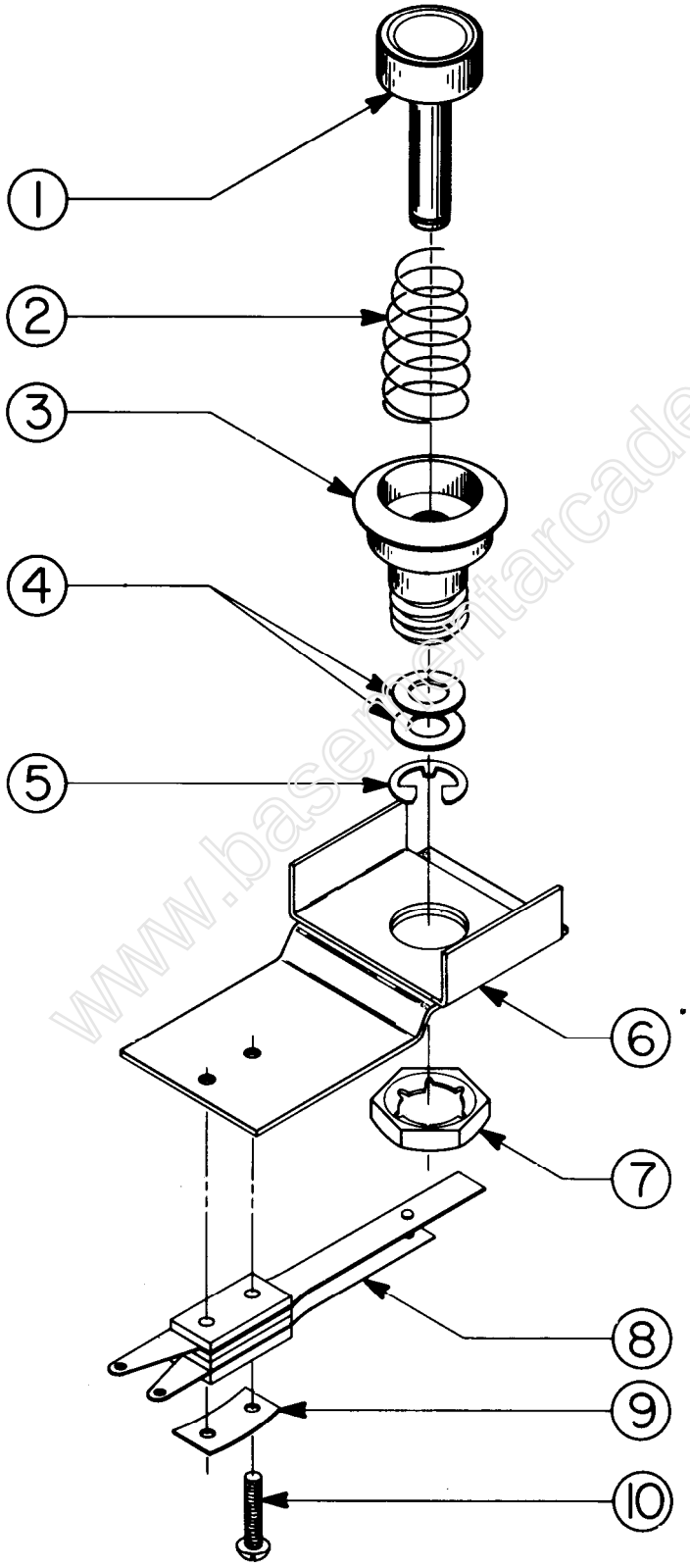

www.baselinearcade.com

RALLY-X — PUSH BUTTON ASSEMBLY

ORDER BY PART NUMBER ONLY

ITEM	PART Nº	DESCRIPTION
1	0017-00009-B384	BUTTON - RED
2	0010-00242-0000	SPRING
3	0017-00009-0376	BUTTON HOUSING
4	0017-00104-0028	FLAT WASHER (2 REQ'D.)
5	0017-00100-0025	1/4" E-RING
	A855-00016-0000	PUSH BUTTON ASSY. (FIRST 5 ITEMS)
6	A927-00011-0000	MOUNTING BRKT. ASSY. - (COCKTAIL)
6	0586-00107-0000	MOUNTING BRKT. - (UPRIGHT & MINI ONLY)
7	0017-00103-0054	PAL NUT
8	A739-00016-0000	SWITCH ASSEMBLY
9	0020-00202-0000	SWITCH PLATE
10	0017-00101-0526	#5-40 x 9/16 PHIL. HD. M.S. (2 REQ'D.)

www.basementarcade.com

RALLY-X — TRANSFORMER BOARD ASSEMBLY

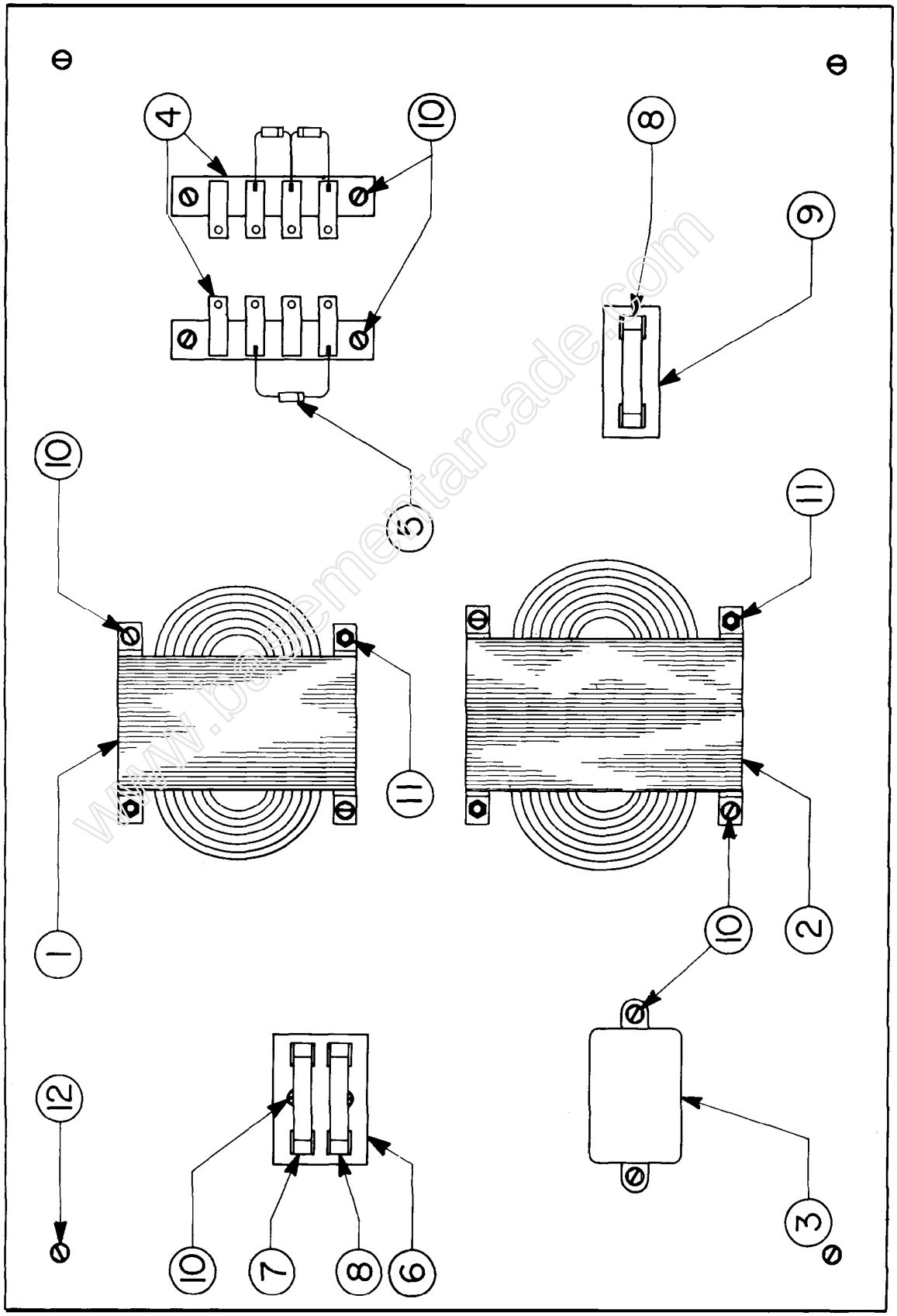

www.basementarcade.com

RALLY-X — TRANSFORMER BOARD ASSEMBLY

ORDER BY PART NUMBER ONLY

ITEM	PART Nº	DESCRIPTION
1	MT00-00082-0000	TRANSFORMER 115 VOLT
2	MT00-00087-0000	TRANSFORMER 240 VOLT
3	0017-00003-0114	NOISE FILTER
4	A031-00002-0000	TERMINAL STRIP ASSY. (2 REQ'D.)
5	0064-030XX-XXPX	DIODE IN4004 400V. (3 REQ'D.)
6	0720-00001-0200	2 POSITION FUSE CLIP
8	0017-00003-0103	FUSE 1A., 250V. SLO-BLO
8	0017-00003-0004	FUSE 2A., 250V. SLO-BLO (2 REQ'D.)
9	0720-00001-0100	1 POSITION FUSE CLIP
10	0017-00101-0015	#6 x 1-1/2 SLT. HEX HD. SCR. (16 REQ'D.)
11	0017-00101-0637	#8-32 x 1-1/4 CARRIAGE BOLT (4 REQ'D.)
	0017-00103-0008	#8-32 HEX NUT (4 REQ'D.)
12	0017-00101-0018	#6 x 3/4 SLT. HEX HD. SCR. (4 REQ'D.)
	A866-00049-0000	LINE CORD ASSY. - NOT SHOWN
	3000-04271-0000	GROUND STRAP - NOT SHOWN

www.basementarcade.com

NO. 935 & 937 — RALLY-X UPRIGHT & MINI — FRONT DOOR ASSEMBLY

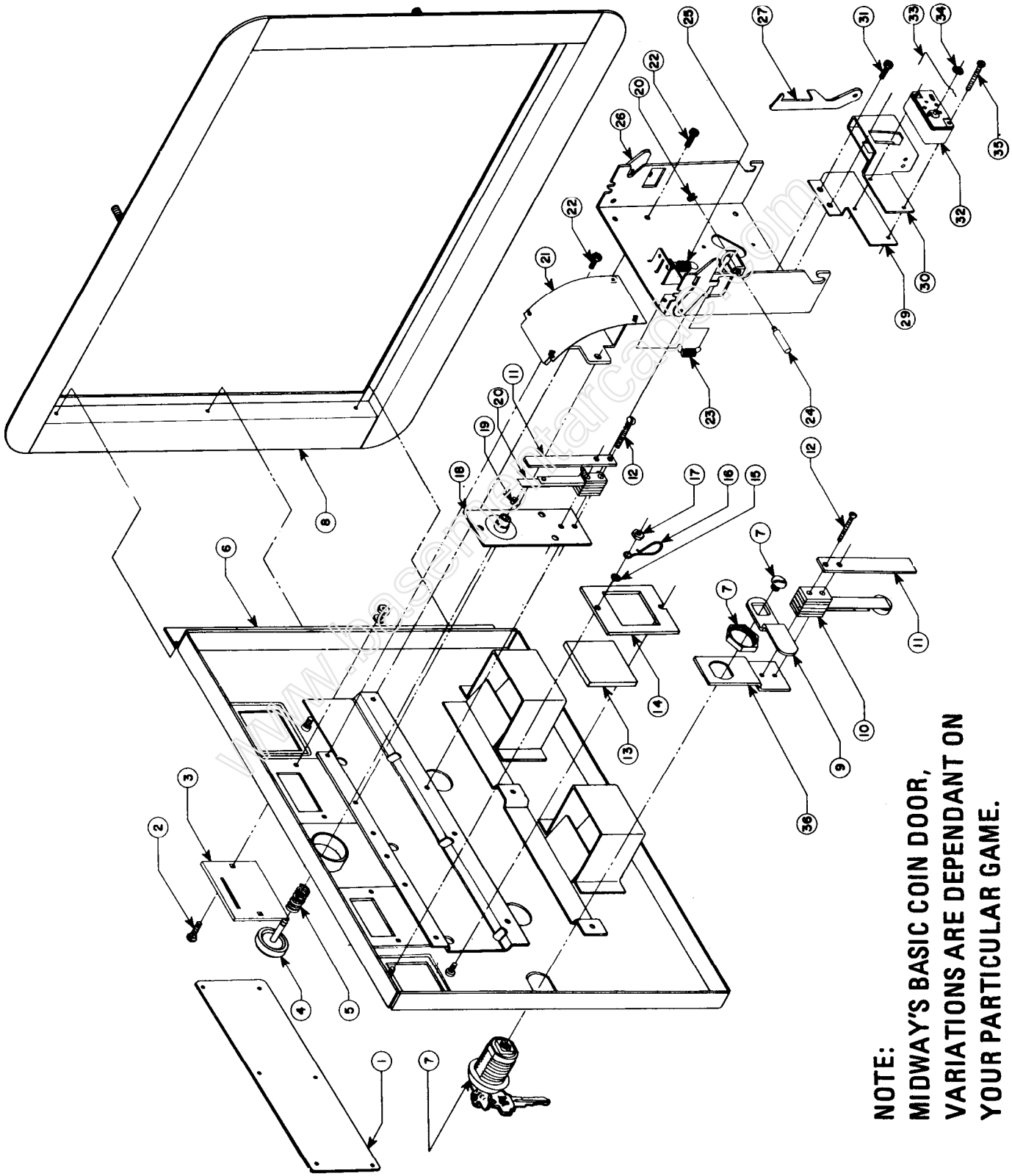

NOTE:
MIDWAY'S BASIC COIN DOOR,
VARIATIONS ARE DEPENDANT ON
YOUR PARTICULAR GAME.

ORDER BY PART NUMBER ONLY

ITEM	PART Nº	DESCRIPTION
1	0090-00902-0000	DRESS PLATE
	0090-00902-0100	DRESS PLATE W/O BUTTON TO START GAME
2	0017-00101-0552	#6-32 x 1/4 CARRIAGE BOLT (2)
3	0090-00117-03XF	COIN ENTRY PLATE (25¢)
4	0090-00906-0000	PLASTIC START BUTTON
5	0010-00007-0000	COMPRESSION SPRING
6	A090-00020-2003	DOOR ASSY. DOUBLE ENTRY
7	0017-00005-0050	DOOR LOCK & KEY WITH SCREW & NUT
8	0090-00002-02BK	DOUBLE DOOR FRAME
9	0017-00005-0041	421 N.S. CAM
10	0090-00901-0000	DOOR SWITCH
	0090-00126-01XF	SWITCH BACKUP PLATE
12	0017-00101-0528	#5-40 x 3/4" LNG. M.S.
13	0090-00903-9500	25¢ WINDOW
14	0090-00143-0000	COIN PLEX RETAINER
15	0017-00104-0002	SPLIT LOCK WASHER
16	0017-00007-0019	KEY HOOK
17	0017-00103-0005	#6-32 HEX NUT
18	0090-00010-0000	SW. PLATE & OILLITE ASSY.
19	0017-00100-0018	"E" RING
20	0090-00131-0000	SWITCH
21	0090-00104-0000	TOP & BTM. COIN CHUTE W/BRKT. ASSY.
22	0017-00101-0598	#8 x 5/16 SCREW
23	0010-00161-0100	SPRING
24	0090-00129-00XF	PIVOT POST
25	0010-00134-0000	SPRING
26	0090-00008-0000	ACCEPTOR FRAME ASSY.
27	0093-00155-00XF	REJECTOR LEVER
28	0017-00100-0012	"E" RING
29	0090-00162-00XF	COIN SWITCH MTG. BRKT. - SMALL (AMERICAN)
29	0090-00163-00XF	COIN SWITCH MTG. BRKT. - LARGE
30	0017-00005-0203	COIN SWITCH CHUTE - SMALL (AMERICAN)
30	0017-00005-0204	COIN SWITCH CHUTE - LARGE
31	0017-00101-0555	#6-32 x 5/16 SCREW
32	0017-00005-0195	COIN SWITCH
33	0010-00599-0000	COIN SWITCH WIRE
34	0017-00007-0132	PUSH-ON RING (BLK.)
35	0017-00101-0698	#4-40 x 3/4 SCREW (2 REQ'D.)
36	0090-00128-00XF	SWITCH BRKT. - DOOR TILT
	A090-00061-0000	ANTI-STRING DEVICE ASSY. (REPLACES ITEM 30)
	A090-00064-0000	ANTI-PENNY DEVICE ASSY.

NO. 936 — RALLY-X COCKTAIL — FRONT DOOR ASSEMBLY

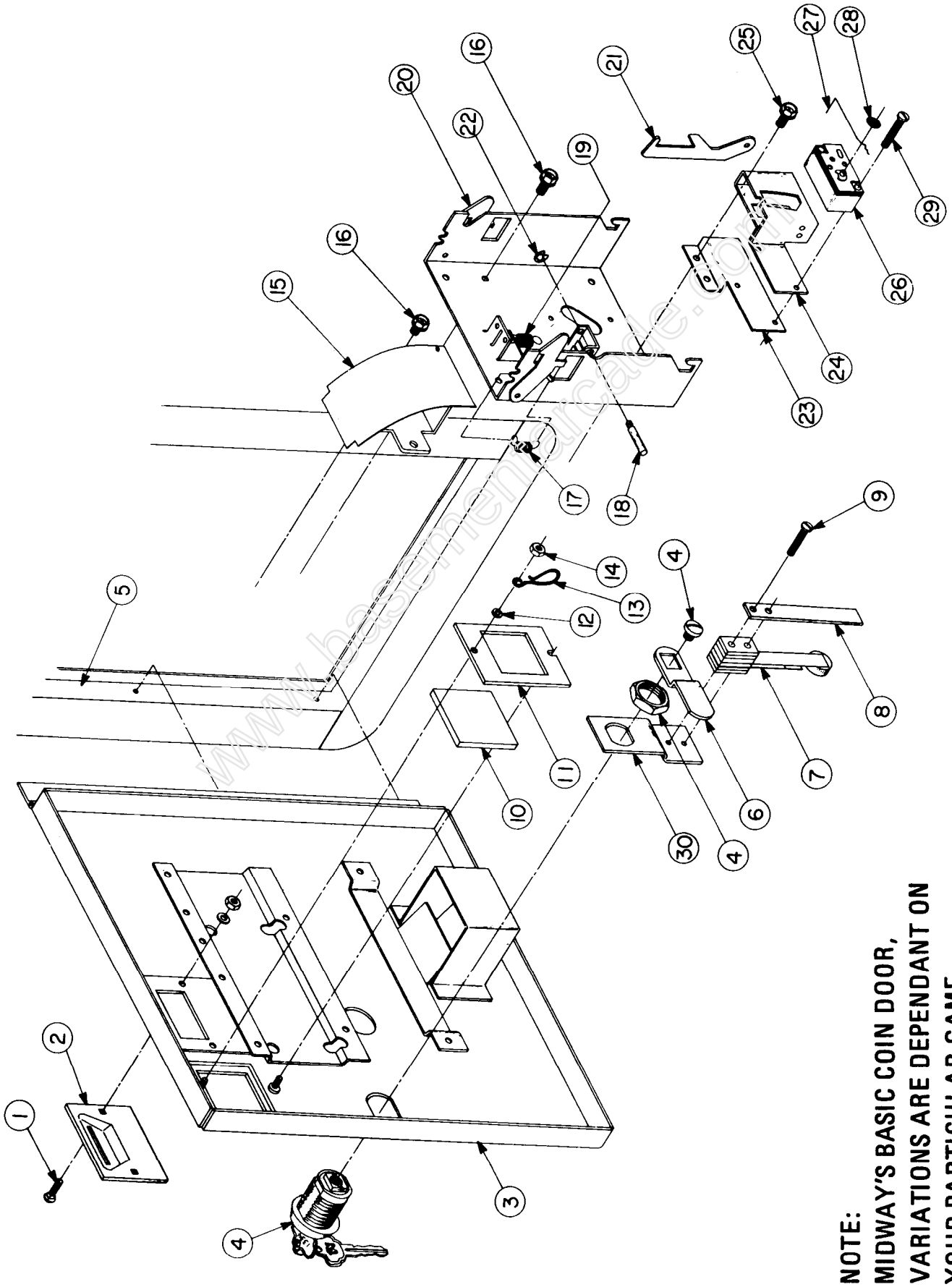

NOTE:
MIDWAY'S BASIC COIN DOOR,
VARIATIONS ARE DEPENDANT ON
YOUR PARTICULAR GAME.

www.basementarcade.com

NO. 936 — RALLY-X COCKTAIL — FRONT DOOR ASSEMBLY

ORDER BY PART NUMBER ONLY

ITEM	PART Nº	DESCRIPTION
1	0017-00101-0552	#6-32 x 1/4 CARRIAGE BOLT (2 REQ'D.)
2	0090-00117-03XF	COIN ENTRY PLATE (25¢)
3	A090-00058-0000	DOOR ASSY. SINGLE ENTRY
4	0017-00005-0050	DOOR LOCK & KEY WITH SCREW & NUT
5	0090-00002-01BK	SINGLE DOOR FRAME
6	0017-00005-0041	421 N.S. CAM
7	0090-00901-0000	DOOR SWITCH
8	0090-00126-01XF	SWITCH BACKUP PLATE
9	0017-00101-0528	#5-40 x 3/4 LONG M.S. (2 REQ'D.)
10	0090-00903-9500	25¢ WINDOW
11	0090-00143-0000	COIN PLEX RETAINER
12	0017-00104-0002	SPLIT LOCK WASHER (2 REQ'D.)
13	0017-00007-0019	KEY HOOK
14	0017-00103-0005	#6-32 HEX NUT (2 REQ'D.)
15	0090-00104-0000	TOP & BOTTOM COIN CHUTE W/BRKT. ASSY.
16	0017-00101-0598	#8-32 x 5/16 SCREW (4 REQ'D.)
17	0010-00181-0100	SPRING
18	0090-00129-00XF	PIVOT POST
19	0010-00134-0006	SPRING
20	0090-00008-0000	ACCEPTOR FRAME ASSY.
21	0093-00155-00XF	REJECTOR LEVER
22	0017-00100-0012	E-RING
23	0090-00162-00XF	COIN SWITCH MTG. BRKT. - SMALL (AMERICAN)
23	0090-00163-00XF	COIN SWITCH MTG. BRKT. - LARGE
24	0017-00005-0203	COIN SWITCH CHUTE - SMALL (AMERICAN)
24	0017-00005-0204	COIN SWITCH CHUTE - LARGE
25	0017-00101-0555	#6-32 x 5/16 SCREW (2 REQ'D.)
26	0017-00005-0195	COIN SWITCH
27	0010-00599-0000	COIN SWITCH WIRE
28	0017-00007-0132	PUSH-ON RING (BLK.)
29	0017-00101-0698	#4-40 x 3/4 SCREW (2 REQ'D.)
30	0090-00128-00XF	SWITCH BRKT. - DOOR TILT
	A090-00061-0000	ANTI-STRING DEVICE ASSY. (REPLACES ITEM 24)
	A090-00064-0000	ANTI-PENNY DEVICE ASSY.

www.vasemenarcade.com

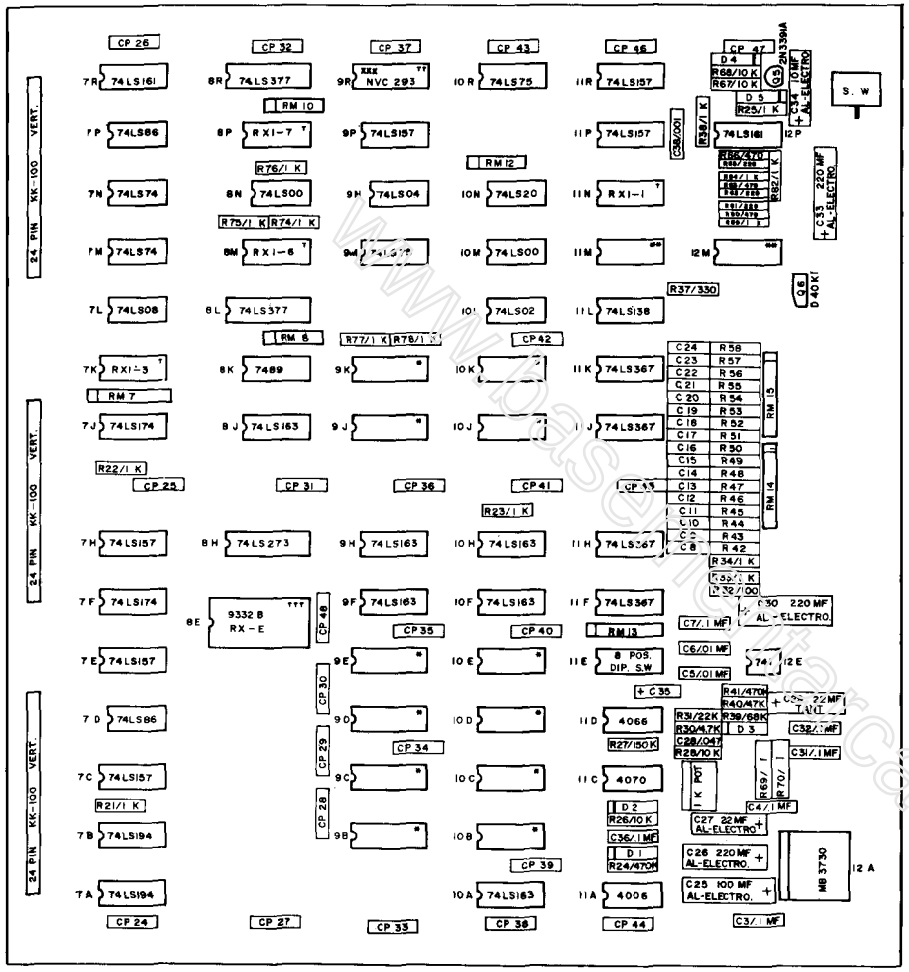

NOTE:

*	: W/HEATSINKS AS PER B.O.M.
	: PRIMARY - MBM2147H IN LOC. 9B, 9C, 9D, 9E, 9J, 9K
	SUB - MBM2147E IN LOC. 9B, 9C, 9D, 9E, 9J, 9K
	SUB - 93415. IN LOC. 10B, 10C, 10D, 10E, 10J, 10K
**	. PRIMARY - 74LS259 IN LOC. 12M
	SUB - CD 4099 IN LOC. 11M
T	: 16 PIN SOCKET (4 EA)
TT	: 18 PIN SOCKET (1 EA)
TTT	: 24 PIN SOCKET (1 EA)
D1 ~ D5	: IN 914B
R42 - R58	: 220 Ohm
R69, 70	: 1 Ohm 1/2 W
C4, 31, 32	- .1 MF DISC. CER.
CP24 - CP48, C8 - C24	: .1 MF AX. CER.
C35	: 1 MF TANT
RM7, 13, 14, 15	: 1 K 9 OR 10 PIN SIP
RM8, 10, 12	: 1 K 6 PIN SIP
UNIT	UNMARKED CAPS ARE MF & ALL CAPS ARE AX. TYPE
ALL RESISTOR UNIT	Ohm
C5, 6	- MYLAR CAPS
XXX	: THIS LOCATION CAN UTLIZE EITHER (A) CUSTOM CHIP NVC 293 OR (B) PLUG IN P.C. A082-91388-A000 VIDEO SHIFTER (293)

M051-00935-C030

DO NOT SCALE DWG	HEAT TREAT	SCALE	USED ON RALLY-X	MIDWAY MFG. CO. FRANKLIN PK. ILL.
DIM TOLERANCES UNLESS SPECIFIED	DRN CL	MAT'L	NO REQ'D 1 PER	
CONCENTRICITY T.I.R. .003 FRACTIONAL ± 1/64 DECIMAL .005 HOLE DIA + .002 .000	CKD	FINISH	ASS'Y DRAWING LOGIC BD I	PART NO. A082-91385-C000
	DATE 1-9-81			

REVISIONS

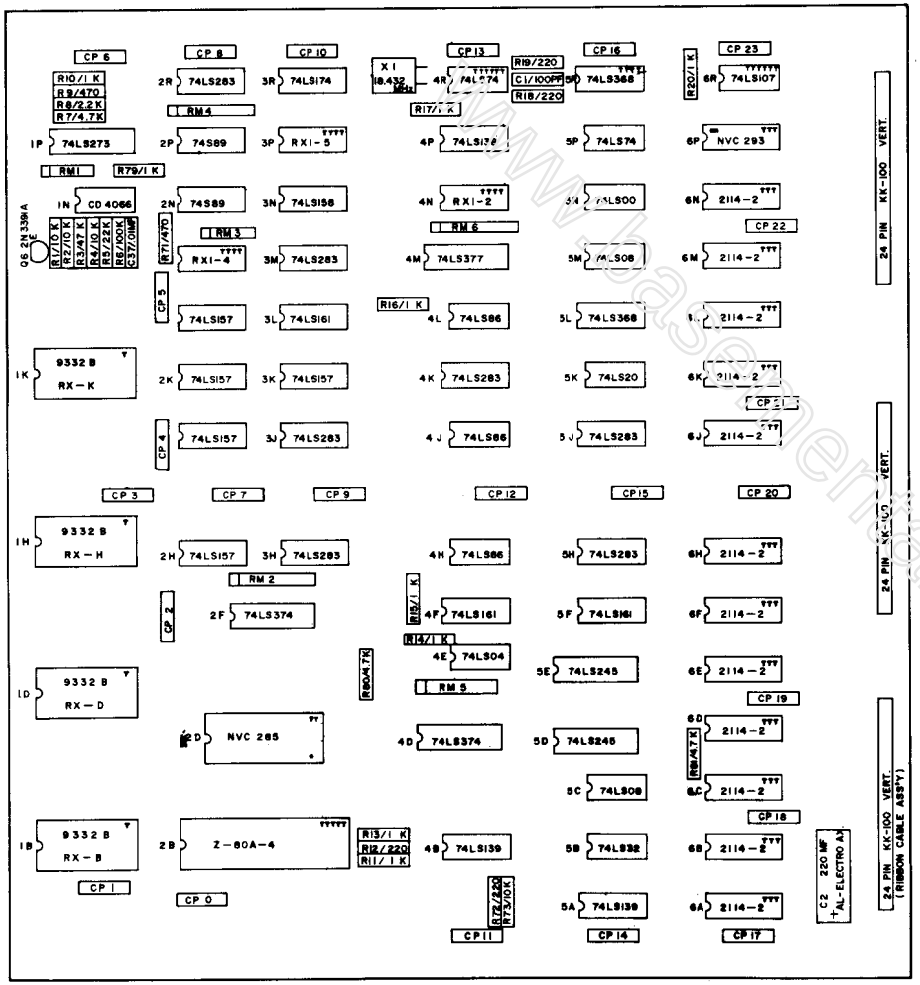

NOTE:

T : 24 PIN SOCKET (4 EA)
TT : 28 PIN SOCKET (1 EA)
TTT : 18 PIN SOCKET (13 EA)
TTTT : 16 PIN SOCKET (4 EA)
TTTTT : 40 PIN SOCKET (1 EA)
TTTTTTT : 14 PIN SOCKET (2 EA)

CP 0 — CP 23 : .1 MF AX. CER.
RM 2, 4, 5, 6 : 1 K 9 OR 10 PIN SIP RESISTOR.
RM 1, 3 1 K 6 PIN SIP RESISTOR.

ALL CER. CAPS ARE AX. TYPE.
RESISTOR UNIT : OHM

RICHO 3/4" STAND-OFF

* NOTE : THIS LOCATION CAN UTILIZE EITHER
(A) CUSTOM CHIP NVC 285
OR (B) PLUG IN P.C. A082-91383-B000
Z-80 SYNC BUSS CONTROLLER (285)

** NOTE : THIS LOCATION CAN UTILIZE EITHER
(A) CUSTOM CHIP NVC 293
OR (B) PLUG IN P.C. A082-91388-A000
VIDEO SHIFTER (293)

M051-00935-C029

DO NOT SCALE DWG.	HEAT TREAT	SCALE	USED ON RALLY-X	MIDWAY MFG. CO. FRANKLIN PK. ILL.
DIM TOLERANCES UNLESS SPECIFIED — DRN C.L.	MAT'L	ASS'Y DRAWING	NO. REQ'D 1 PER	PART NO.
CONCENTRICITY T.I.R. .003 FRACTIONAL ±1/64 DECIMAL ±.005 HOLE DIA +.002 -.000 — CKD. DATE 1-9-81	FINISH	LOGIC BD II		A082-91387-C000

REVISIONS

www.classicarcade.com

NOTES

This space is provided for personal notes

www.basementarcade.com

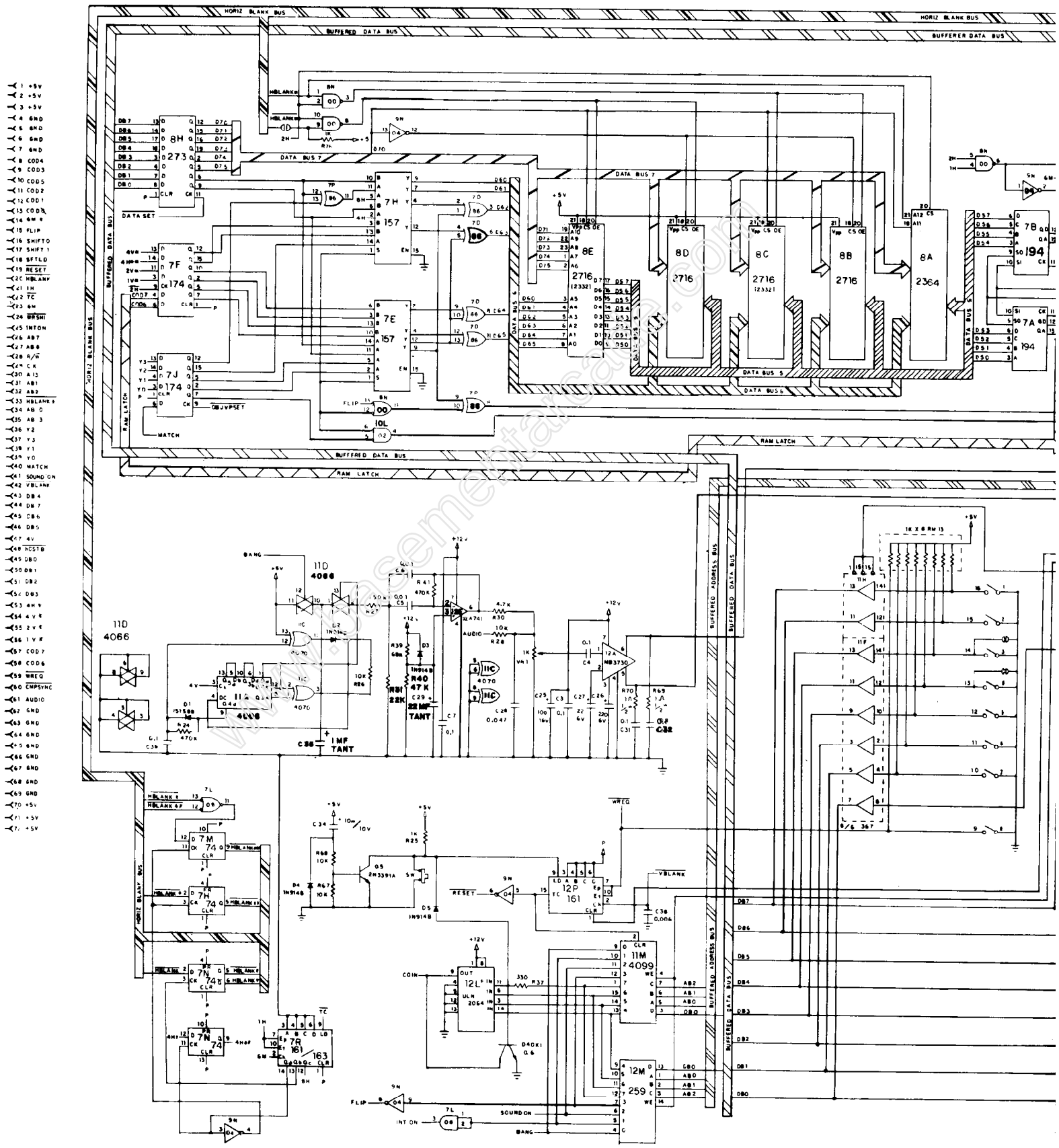

1 +5V
2 +5V
3 +5V
4 GND
5 GND
6 GND
7 GND
8 COD4
9 COD3
10 COD5
11 COD2
12 COD1
13 COD0
14 6M R
15 FLIP
16 SHIFT0
17 SHIFT 1
18 SFTLD
19 RESET
20 HBLANK
21 1H
22 TC
23 6M
24 WRSMI
25 INTON
26 AB7
27 AB6
28 R/W
29 CK
30 AB 5
31 AB1
32 AB2
33 HBLANK R
34 AB 0
35 AB 3
36 Y2
37 Y3
38 Y1
39 Y0
40 MATCH
41 SOUND ON
42 VBLANK
43 DB 4
44 DB 7
45 DB6
46 DB5
47 4V
48 HCSTB
49 DB0
50 DB1
51 DB2
52 DB3
53 4H R
54 4 V R
55 2 V R
56 1 V R
57 COD 7
58 COD6
59 WREQ
60 CMPSYNC
61 AUDIO
62 GND
63 GND
64 GND
65 GND
66 GND
67 GND
68 GND
69 GND
70 +5V
71 +5V
72 +5V

www.basementarcade.com

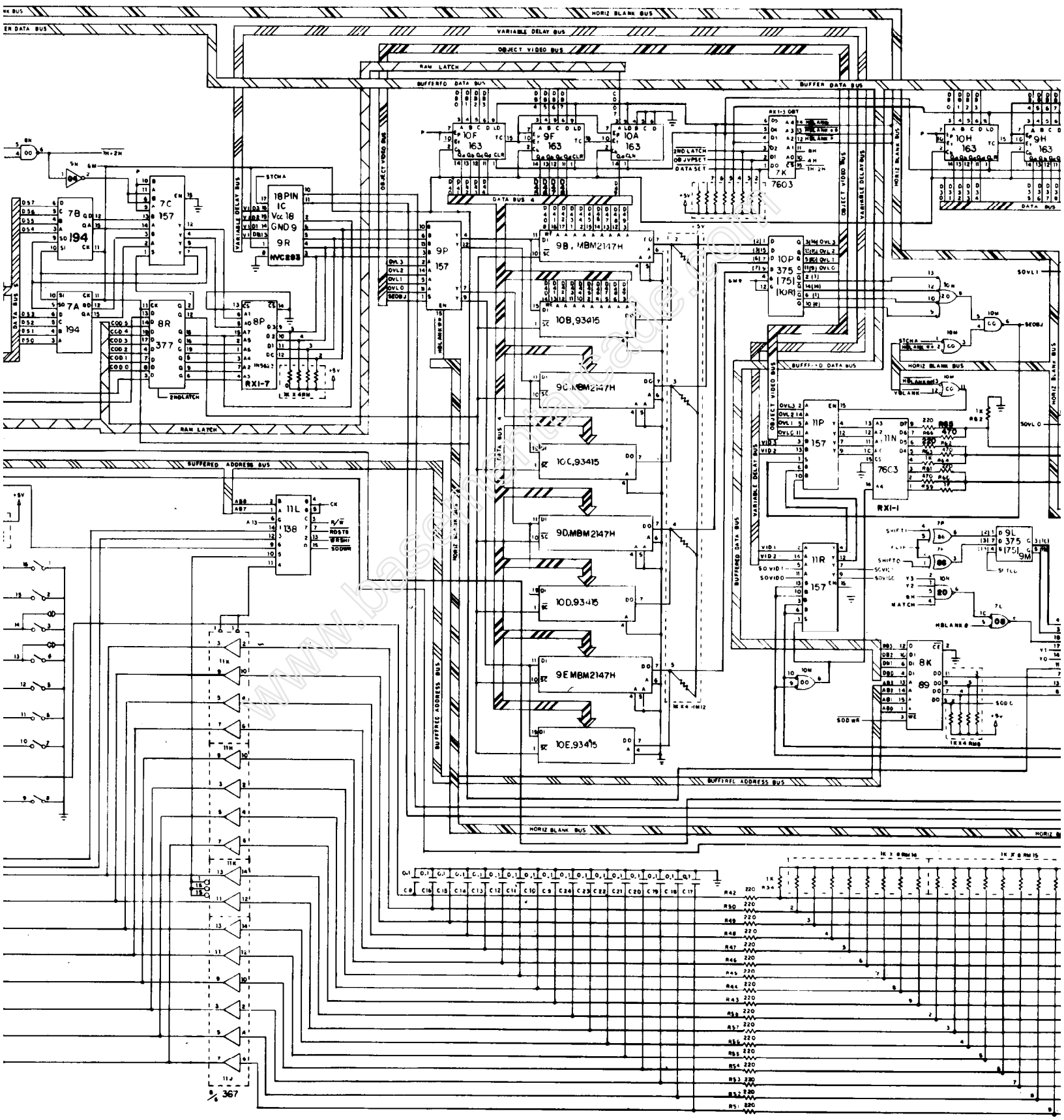

www.bassmanuals.com

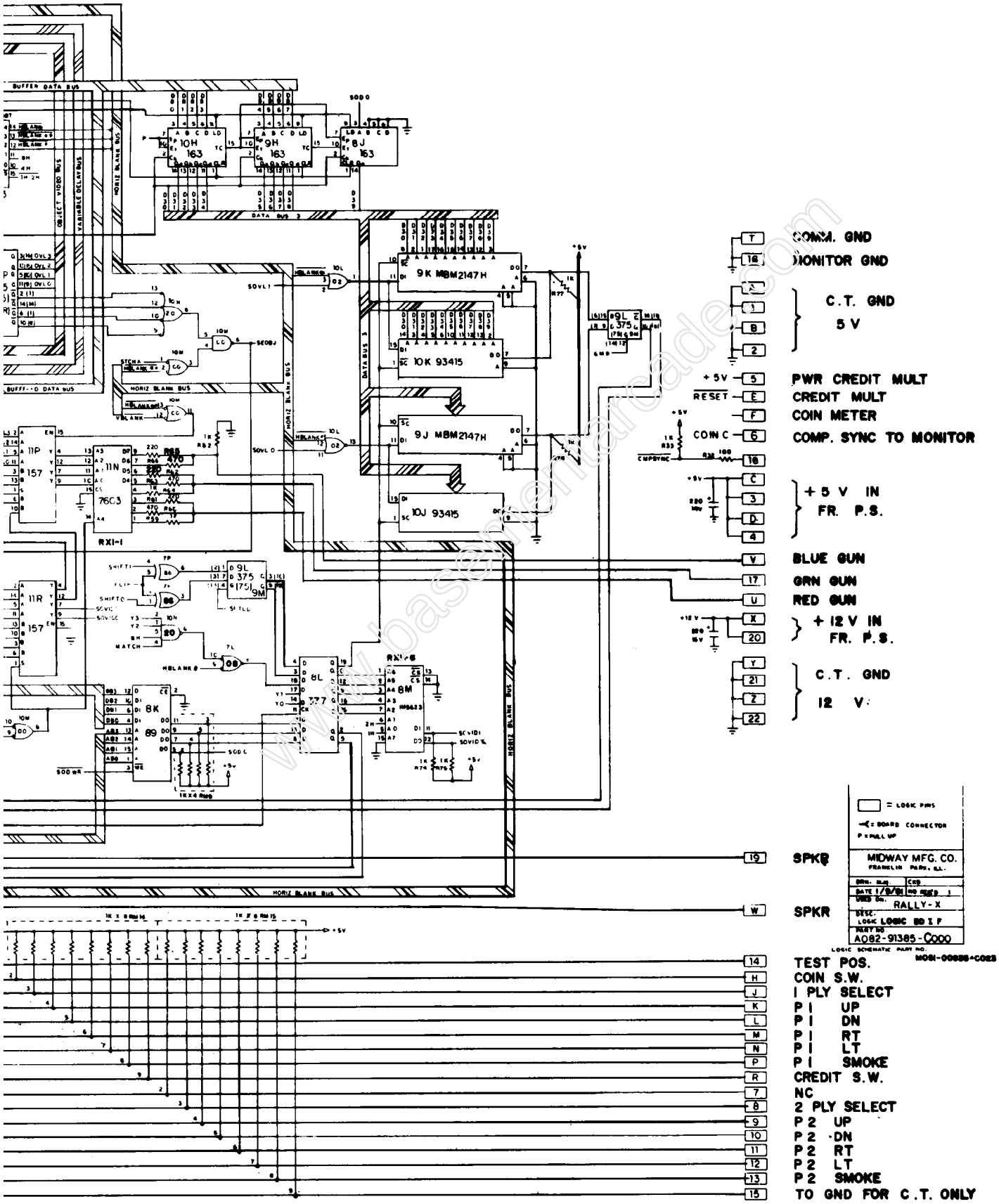
COMM. GND
MONITOR GND
C.T. GND
5 V
+5V
PWR CREDIT MULT
RESET
CREDIT MULT
COIN METER
COIN C
COMP. SYNC TO MONITOR
+5 V IN
FR. P.S.
BLUE GUN
GRN GUN
RED GUN
+12 V IN
FR. P.S.
C.T. GND
12 V
SPKR
SPKR
TEST POS.
COIN S.W.
1 PLY SELECT
P1 UP
P1 DN
P1 RT
P1 LT
P1 SMOKE
CREDIT S.W.
NC
2 PLY SELECT
P2 UP
P2 DN
P2 RT
P2 LT
P2 SMOKE
TO GND FOR C.T. ONLY
= LOGIC PINS
= BOARD CONNECTOR
P = PULL UP
MIDWAY MFG. CO.
FRANKLIN PARK, ILL.
RALLY-X
LOGIC LOGIC BD I F
A082-91385-C000
LOGIC SCHEMATIC PART NO.
MOGI-00085-C023

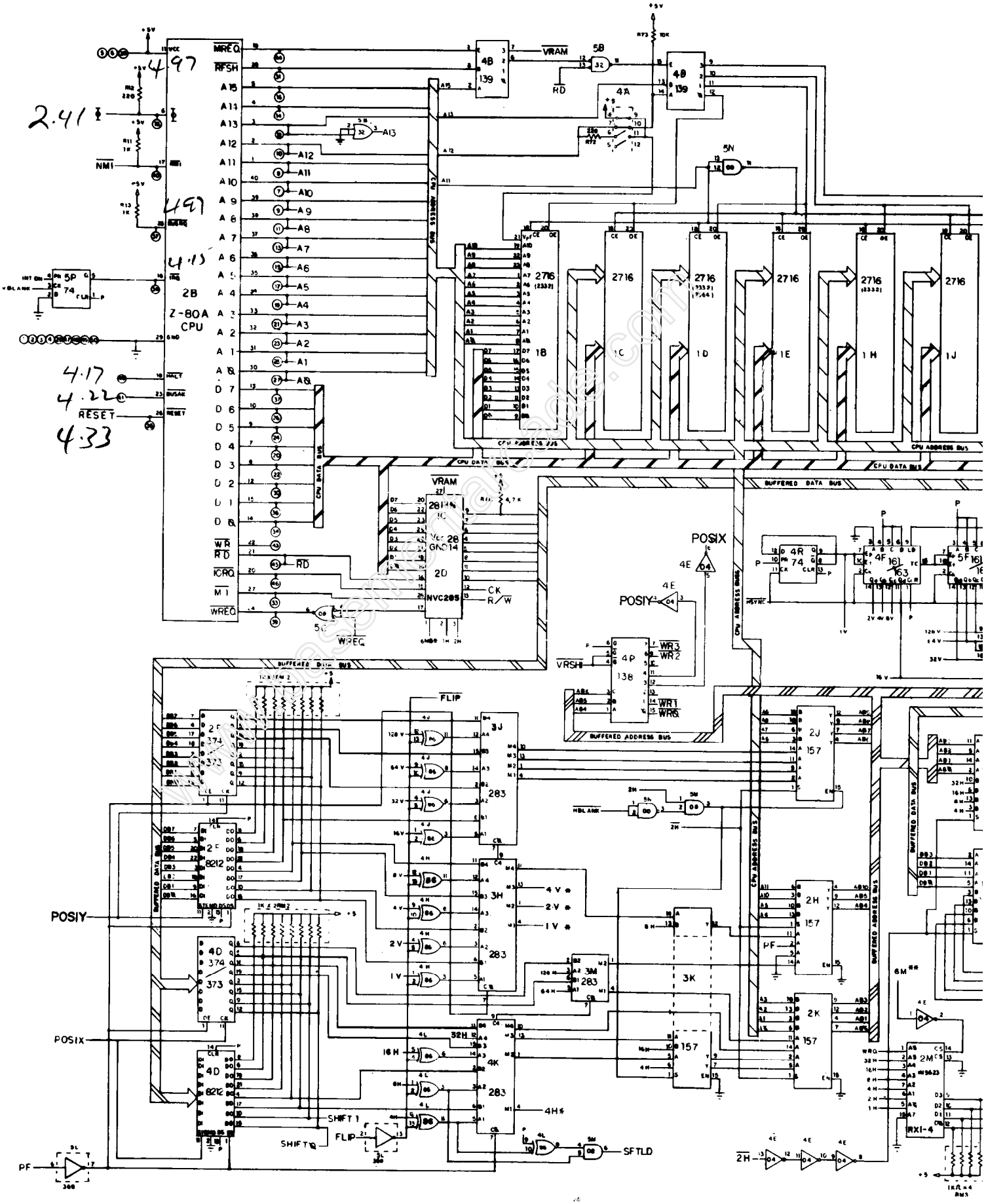

2B
Z-80A
CPU
2716
1B
1C
1D
1E
1H
1J
2D
NVC285
4B
139
5B
4A
5N
5P
74
4R
74
4F
161
163
5F
4P
138
2J
157
2H
157
2K
157
3K
157
3J
283
3H
283
3M
283
4K
283
2F
374
373
2F
8212
4D
374
373
4D
8212
2M
RXI-4
CPU ADDRESS BUS
CPU DATA BUS
BUFFERED DATA BUS
BUFFERED ADDRESS BUS
POSIX
POSIY
FLIP
SHIFT 1
SHIFT 0
SFTLD
PF
RESET

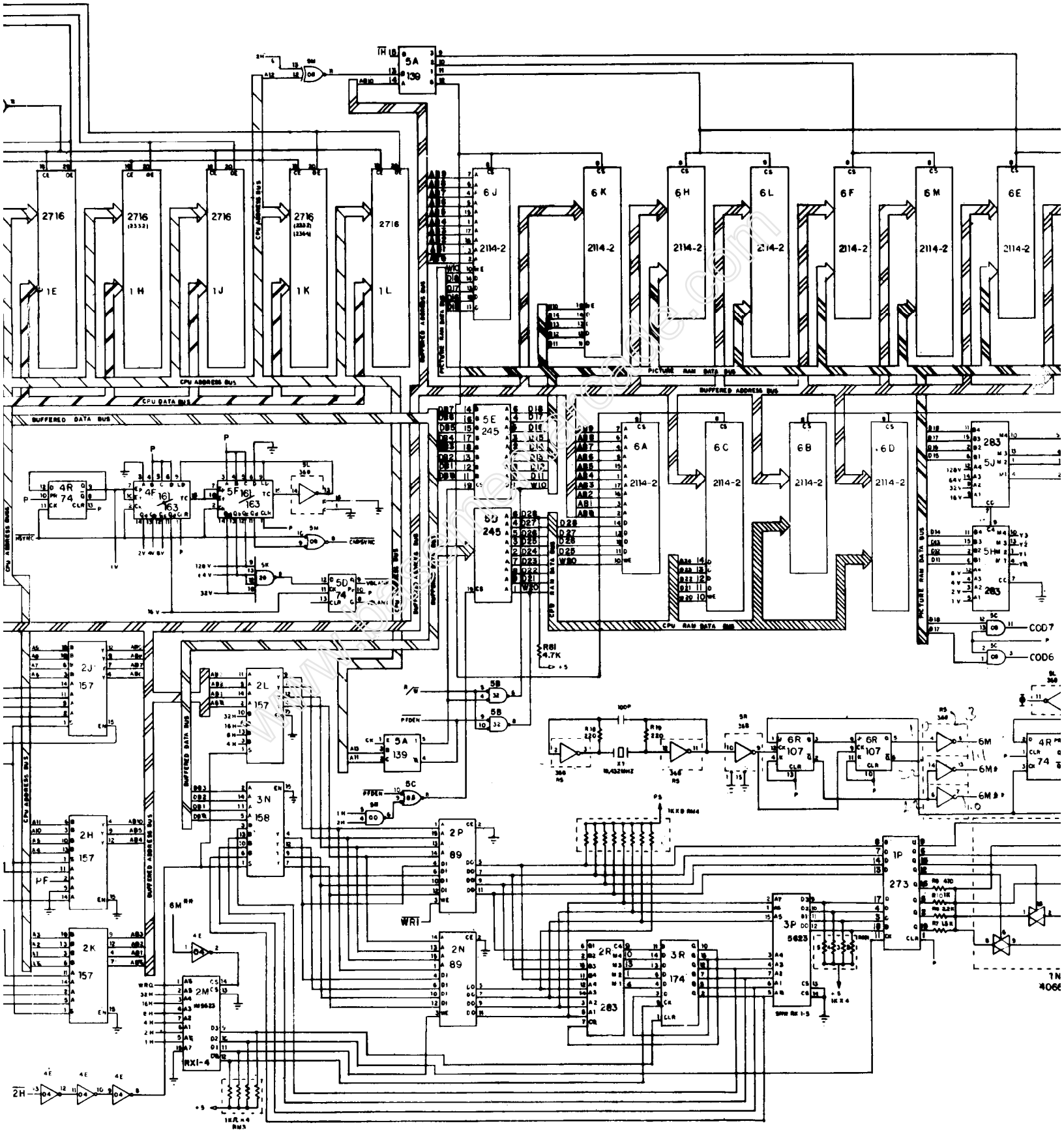

5A 139
2716
1E
1H
1J
1K
1L
6J
6K
6H
6L
6F
6M
6E
2114-2
CPU ADDRESS BUS
CPU DATA BUS
BUFFERED DATA BUS
BUFFERED ADDRESS BUS
PICTURE RAM DATA BUS
5E 245
6D 245
6A
6C
6B
6D
4R 74
4F 161 163
5F 161 163
5D 74
2J 157
2L 157
2H 157
2K 157
3N 158
5A 139
2P 89
2N 89
2R 283
3R 174
3P 5623
1P 273
6R 107
4R 74
5J 283
5H 283
COD7
COD6
R81 4.7K
WR1
RX1-4

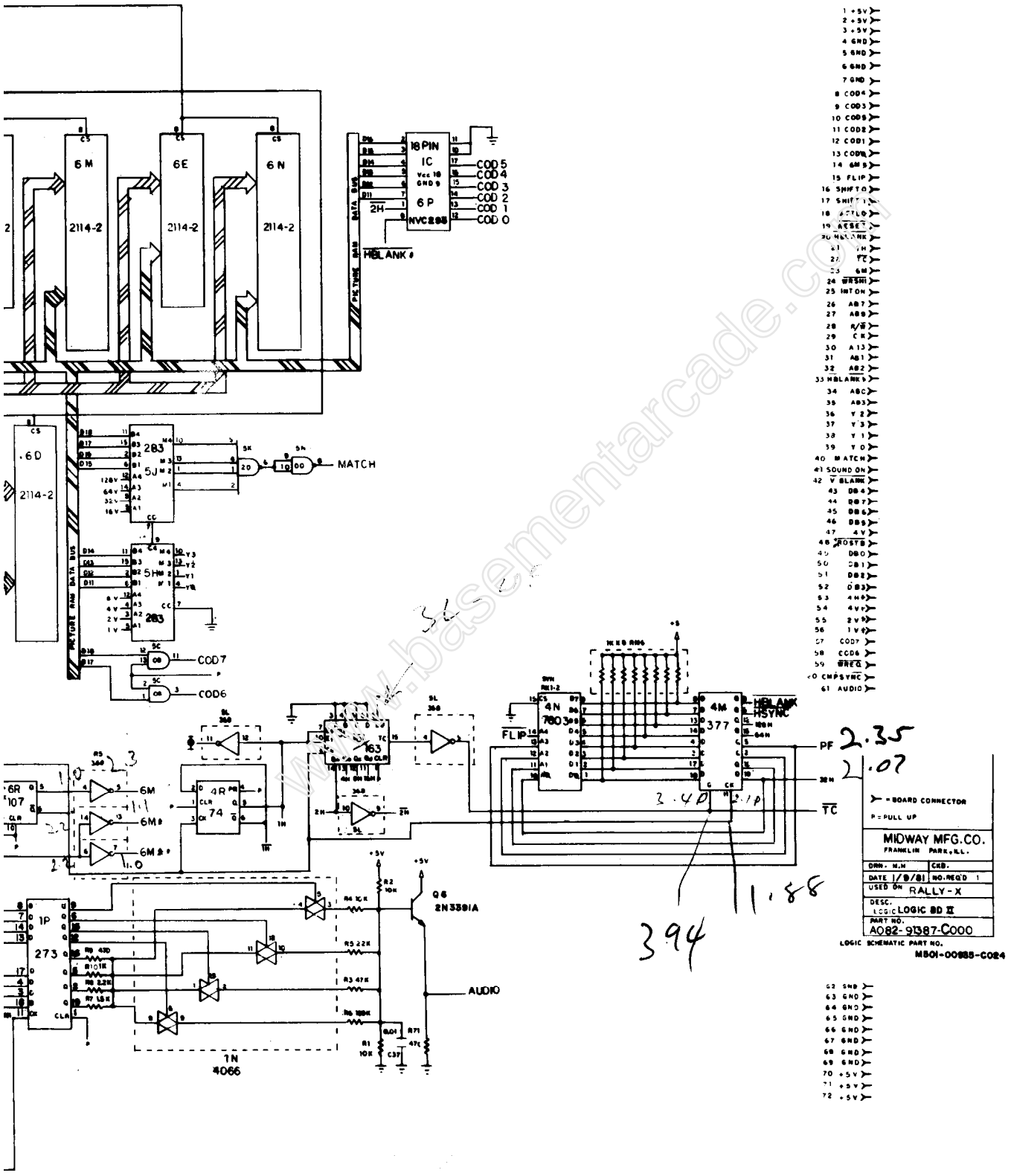

www.basementarcade.com

RALLY - X

Logic Board I
A082-91385-C000

PART NUMBER	FUNCTION
74LS00	Quad 2 input Nand
74LS02	Quad 2 input Nor
74LS04	Hex inverter
74LS08	Quad 2 input And
74LS20	Dual 4 input Nand
74LS74	Dual "D" Flip-Flop
74LS75	Quad latch
74LS86	Quad 2 input exclusive or
74S89	64 Bit Ram 16 x 4
74LS138	3 to 8 line decoder
74LS157	Quad 2 to 1 line multiplexer
74LS161	4 Bit binary counter
74LS163	4 Bit binary counter
74LS174	Hex "D" Flip-Flop
74LS194	8 Bit shift register
74LS259	8 Bit addressable latch
74LS273	Octal "D" Flip-Flop
74LS367	Hex buss driver
74LS377	Octal "D" Flip-Flop
4006	18 Bit shift register
4066	Quad bilateral switch - Cmos
4070	Quad exclusive or gate - Cmos
4099	8 Bit addressable latch - Cmos
NVC293	Custom video shifter
A082-91388-A000	Video shifter P.C.
9332	4K x 8 Rom
2532	4K x 8 Eprom
IM5623	256 x 4 Prom
MBM2147	1K x 1 Ram
93415	1K x 1 Ram
82S25	16 x 4 Ram
7603	32 x 8 Prom - tri-state
741	Operational amplifier
MB3730	Audio amplifier
2N3391	NPN transistor
D40K1	NPN transistor
IN914	Diode

Logic Board II
A082-91387-C000

PART NUMBER	FUNCTION
74LS00	Quad 2 input Nand
74LS04	Hex inverter
74LS08	Quad 2 input And
74LS20	Dual 4 input Nand
74LS32	Quad 2 input or
74LS74	Dual "D" Flip-Flop
74LS86	Quad 2 input exclusive or
74S89	64 Bit Ram 16 x 4
74LS107	Dual "JK" Flip-Flop
74LS138	3 to 8 line decoder
74LS139	Dual 2 to 4 line decoder
74LS157	Quad 2 to 1 line multiplexer
74LS158	Quad 2 to 1 line multiplexer - inverting
74LS161	4 Bit binary counter
74LS174	Hex "D" Flip-Flop
74LS245	Octal buss transceiver
74LS273	Octal "D" Flip-Flop
74LS293	4 Bit full adder
74LS368	Hex buss driver - inverting
74LS374	Octal "D" Flip-Flop Tri-state
74LS377	Octal "D" Flip-Flop
NVC285	Custom Z80 sync buss controller
A082-91383-B000	Z80 sync buss controller P.C.
NVC293	Custom video shifter
A082-91388-A000	Video shifter P.C.
Z80	CPU
9332	4K x Rom
2532	4K x 8 Eprom
IM5623	256 x 4 Prom
7603	32 x 8 Prom - tri-state
2114	1K x 4 Ram
82S25	16 x 4 Ram
4066	Quad bilateral switch
18.432 mhz	Crystal
2N3391	NPN transistor

www.basementarcade.com

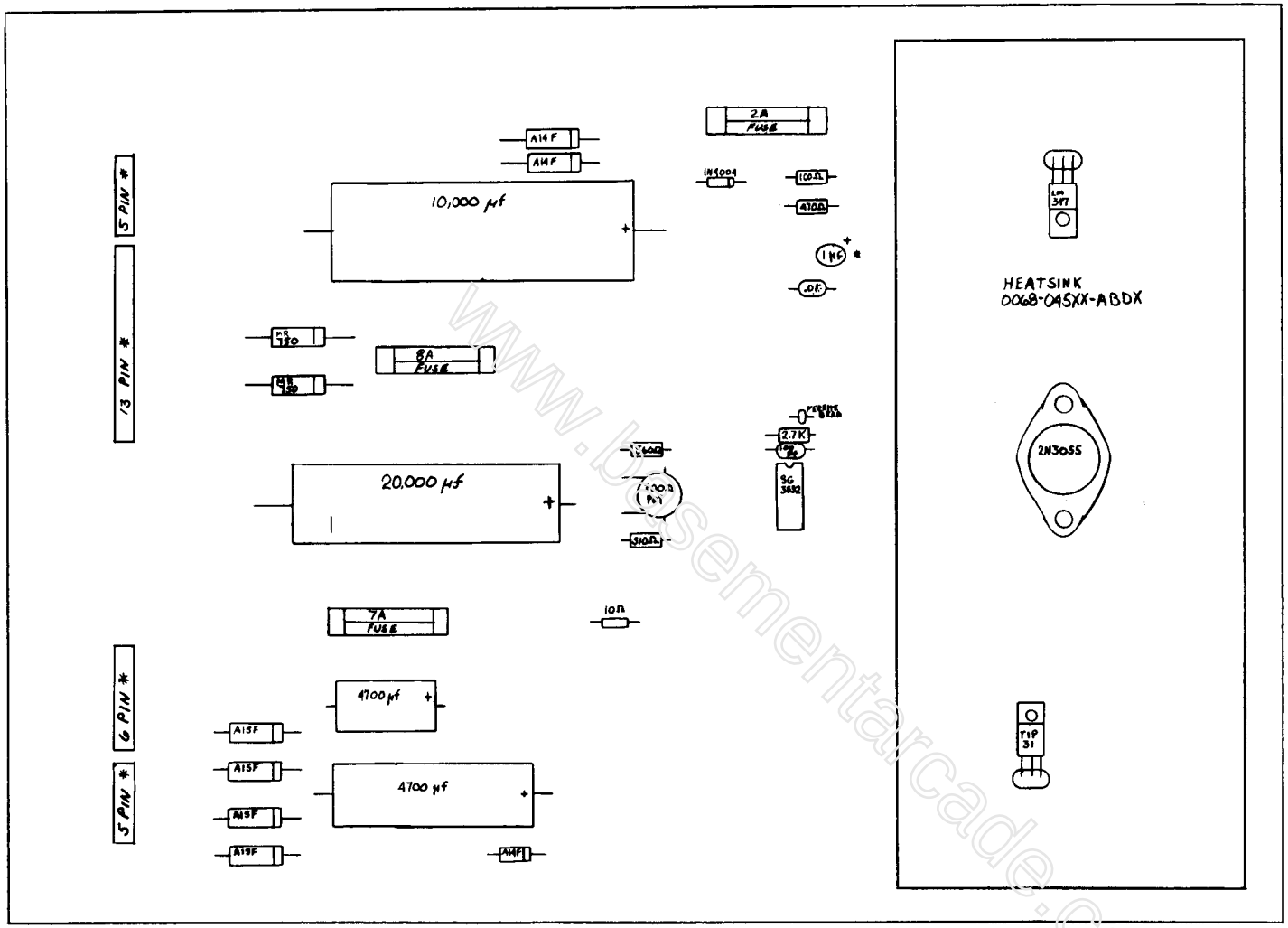

NOTE * AX. TANT OR RD. TANT

* NOTE: RIGHTANGLE KK.156

DRWG. NO. M051-00935-C028

					REVISIONS
			USED ON RALLY-X	MIDWAY MFG. CO. FRANKLIN PK. ILL.	
DO NOT SCALE DWG.		HEAT TREAT	SCALE	NO. REQ'D	
DIM. TOLERANCES UNLESS SPECIFIED CONCENTRICITY T.I.R. .003 FRACTIONAL ± 1/64 DECIMAL ± .005 HOLE DIA. +.002 -.000	DRN. TJK	MAT'L.	RALLY-X POWER SUPPLY ASSMB. DRWG	PART NO. A084-90414-C935	
	CKD.	FINISH			
	DATE 16 JAN 81				

www.basementarcade.com

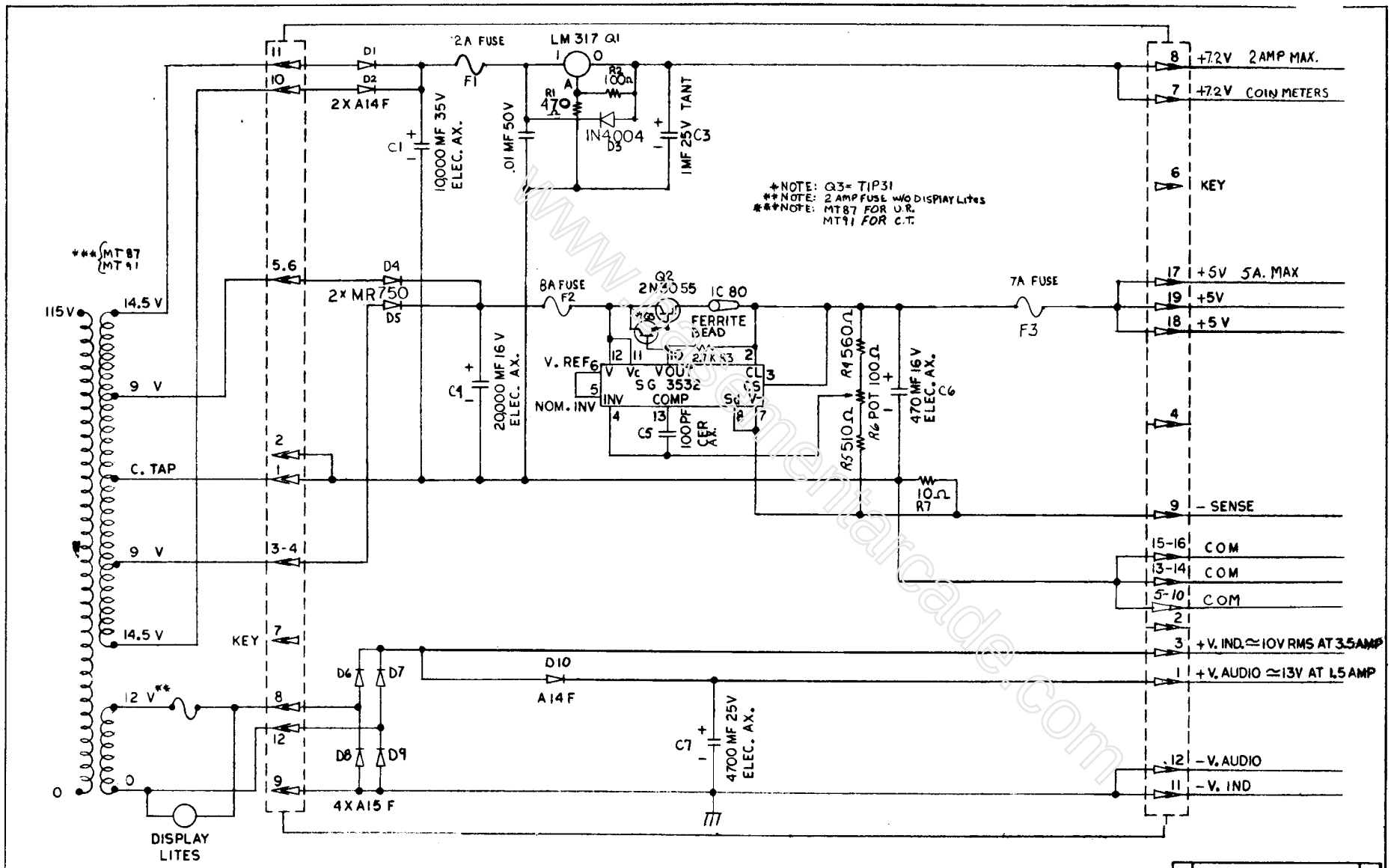

DRAWING NO. M051-00935-C025

DO NOT SCALE DWG.	HEAT TREAT	SCALE	USED ON RALLY-X	MIDWAY MFG. CO. FRANKLIN PK. ILL.
DIM. TOLERANCES UNLESS SPECIFIED — CONCENTRICITY T.I.R. .005, FRACTIONAL ± 1/64, DECIMAL ± .005, HOLE DIA. +.002 -.000	DRN. T3K	MAT'L.	NO. REQ'D 1	RALLY-X PWR SPLY SCHEMATIC
	CKD.	FINISH		PART NO. A084-90414-C935
	DATE 12/ 4 /80			REVISIONS

www.americanarcade.com

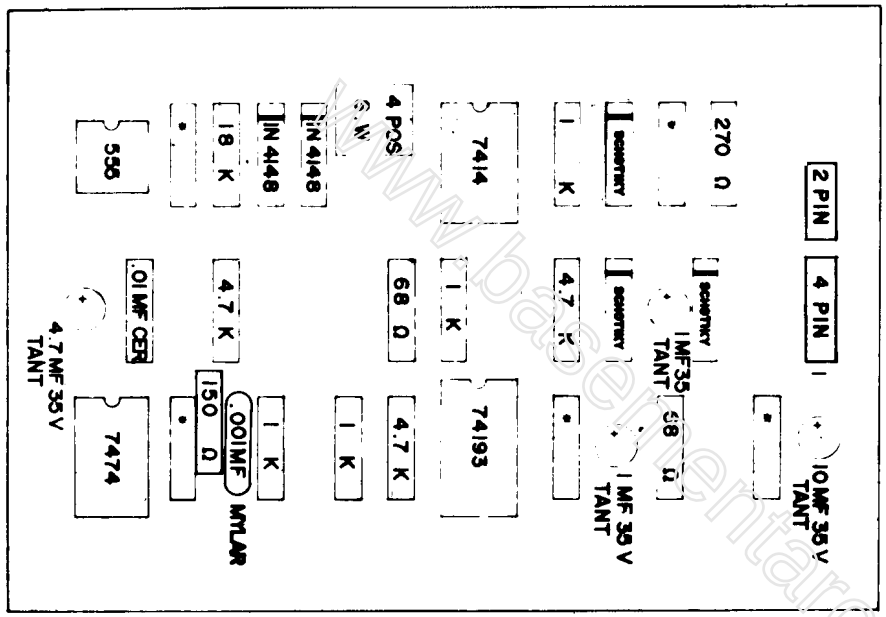

www.pacmanarcade.com

* 1 MF 50 V CER. AX.

SCHOTIKY DIODE — IN5818 OR IN5817

M051-00932-C027

REVISIONS	
USED ON	PAC-MAN
NO REQ'D	

MIDWAY MFG. CO.
FRANKLIN PK ILL

DO NOT SCALE DWG	HEAT TREAT	SCALE	ASSEMBLY DRAWING CREDIT MULTIPLIER P.C
DIM TOLERANCES UNLESS SPECIFIED CONCENTRICITY T I R .003 FRACTIONAL ±1/64 DECIMAL ±.005 HOLE DIA +.002 .000	DRN CW CKD DATE 10/22/80	MAT'L FINISH	PART NO A082-91348-C000

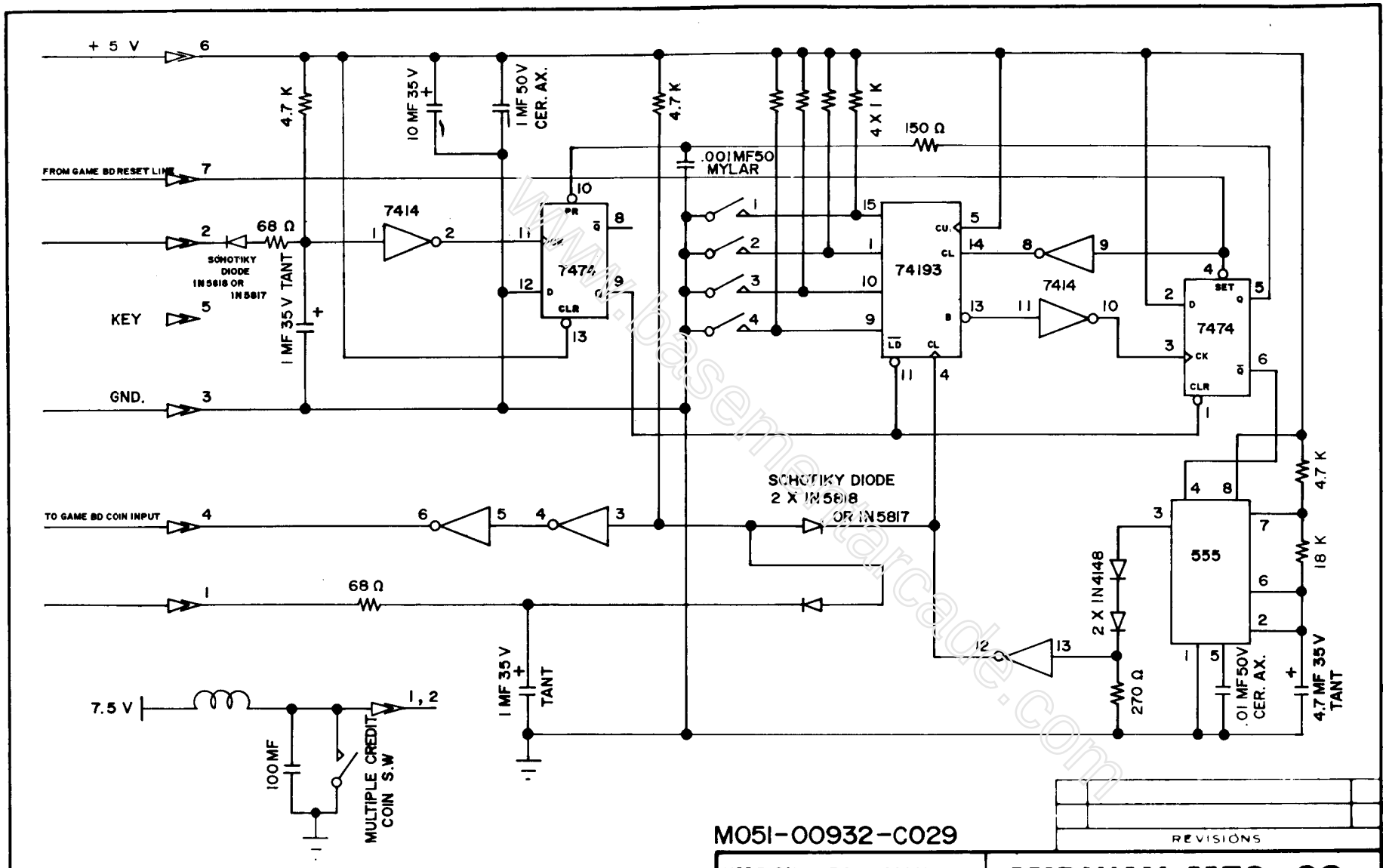

M051-00932-C029

REVISIONS

USED ON PAC-MAN

NO REQ D

MIDWAY MFG. CO.

FRANKLIN PK ILL

DO NOT SCALE DWG

HEAT TREAT

SCALE

DIM TOLERANCES UNLESS SPECIFIED

DRN

DATE 10/23/80

MAT'L

FINISH

SCHEMATIC DIAGRAM
CREDIT MULTIPLIER

PART NO A082 - 91348 - C000

www.basementarcade.com

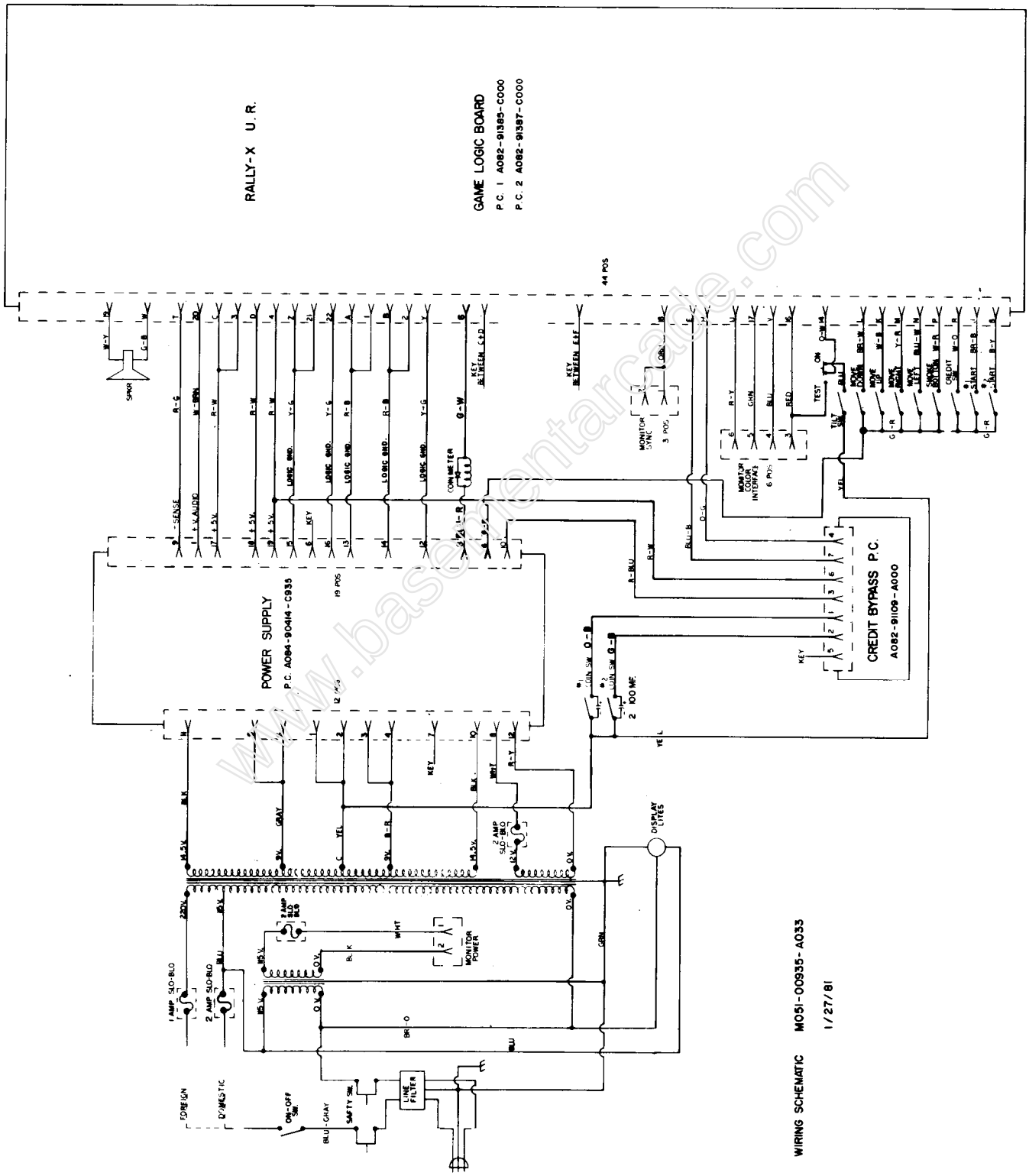

www.basementarcade.com

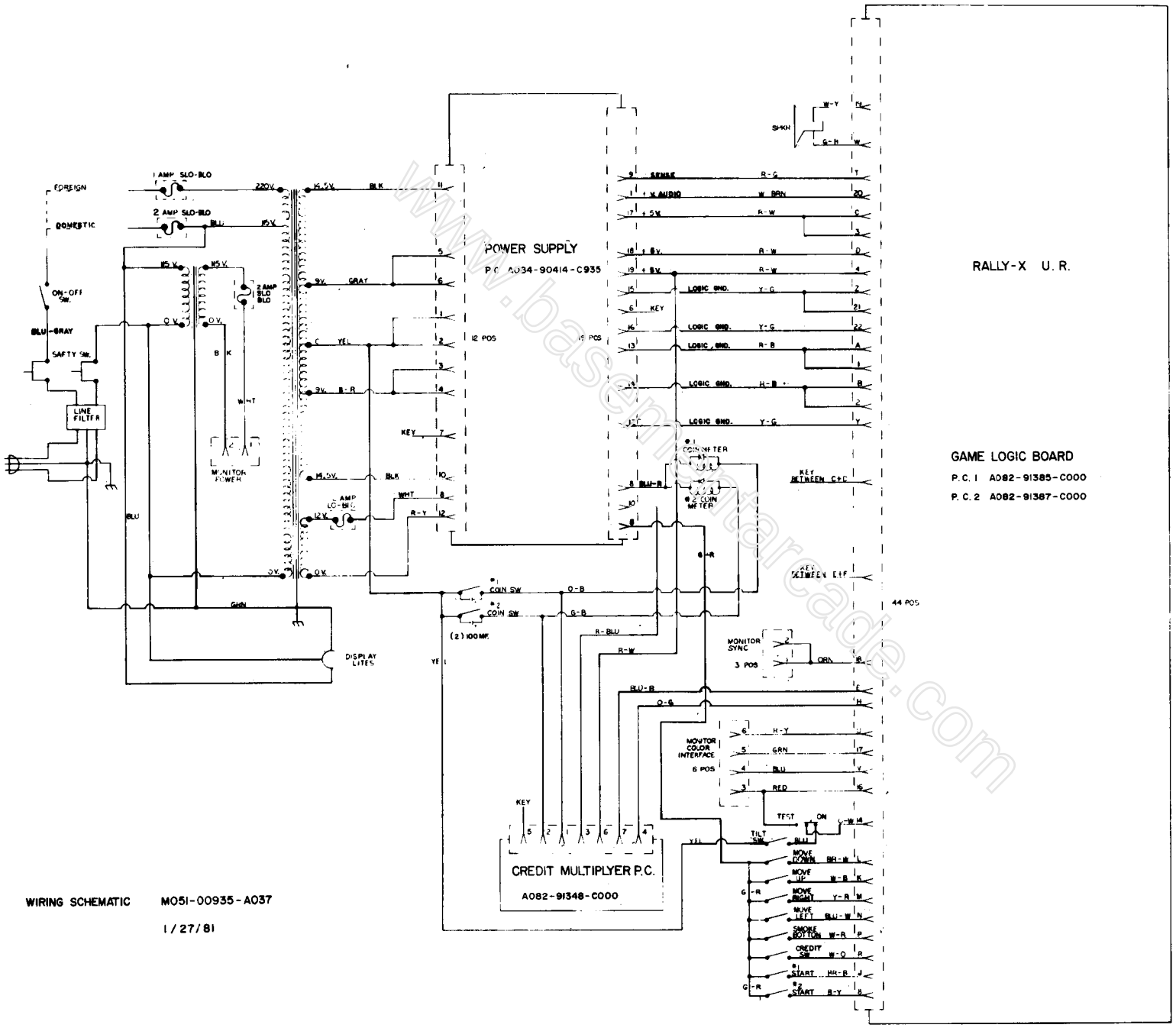

WIRING SCHEMATIC M051-00935-A037

1/27/81

www.basementarcade.com

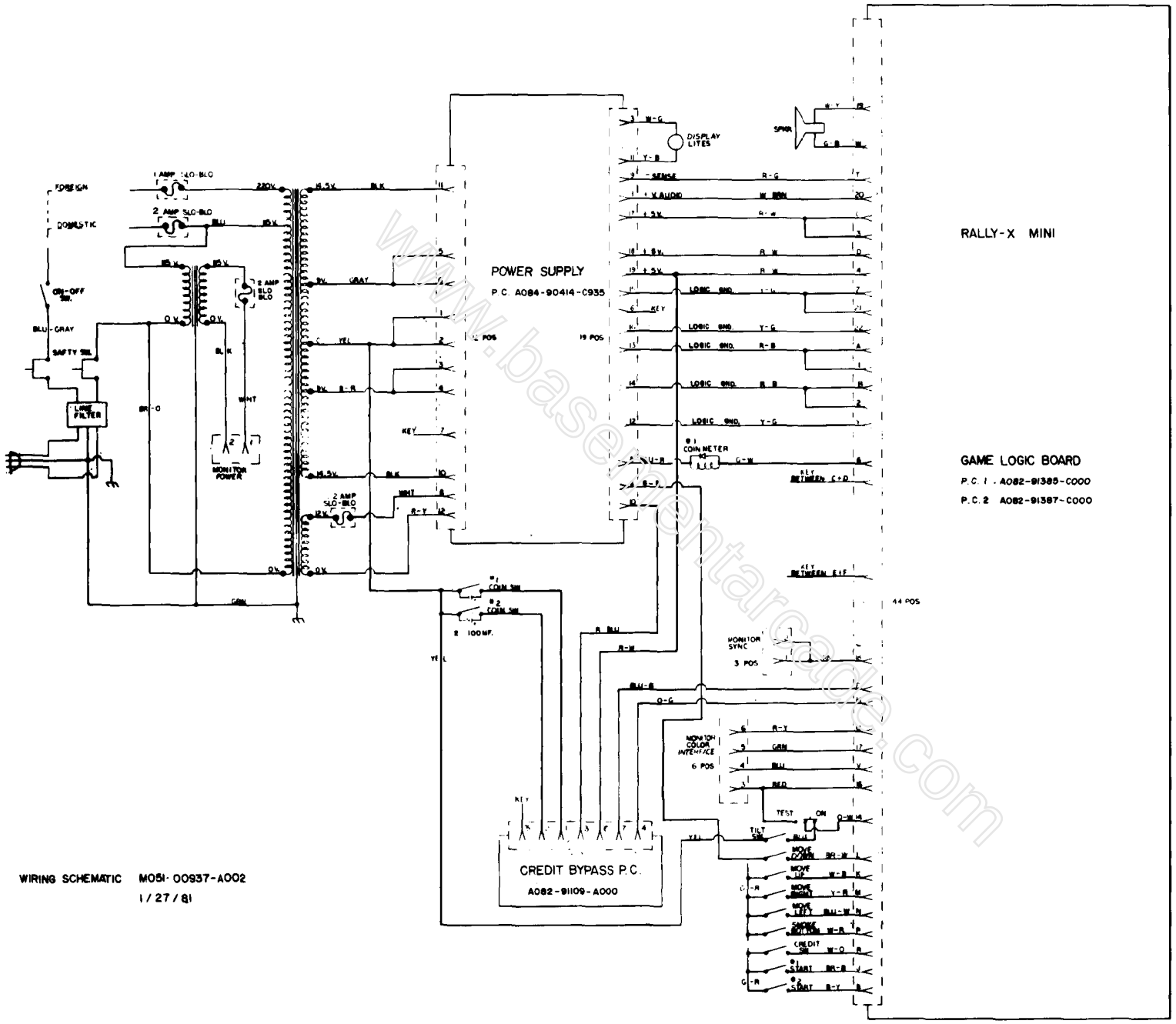

WIRING SCHEMATIC M051-00937-A002
1/27/81

www.basementarcade.com

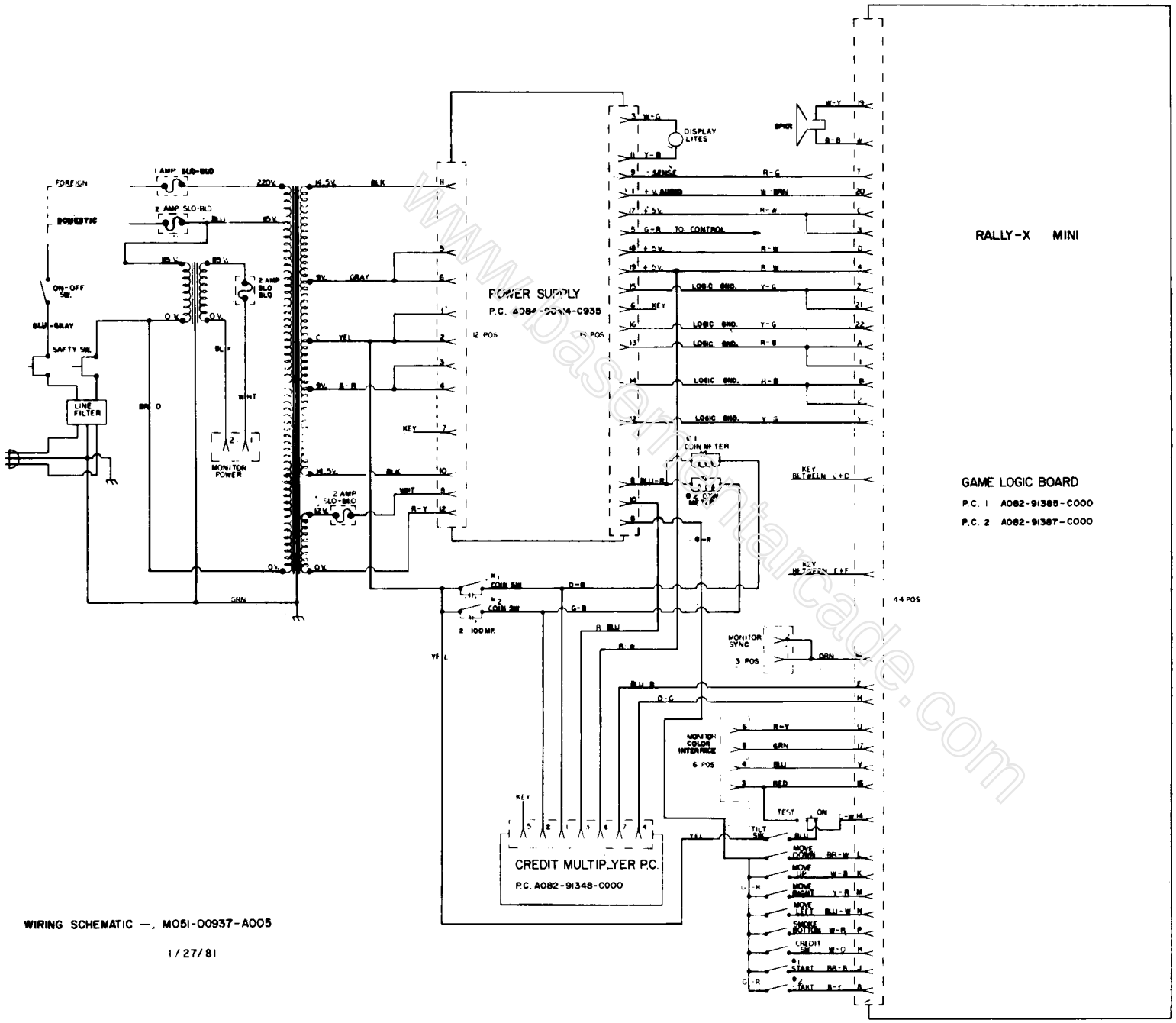

WIRING SCHEMATIC —, M051-00937-A005

1/27/81

www.classicarcade.com

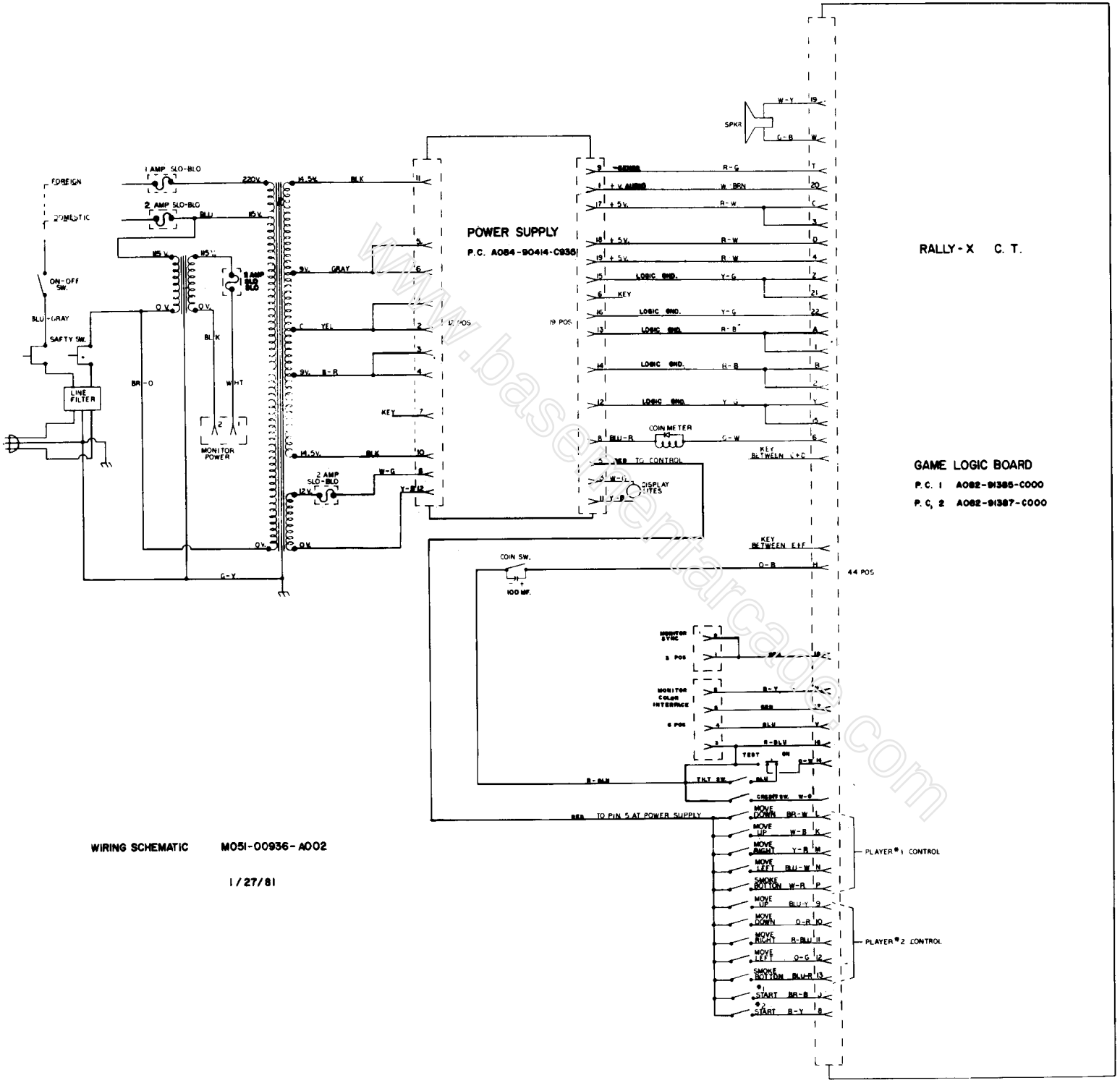

www.basementarcade.com

19" COLOR MONITOR

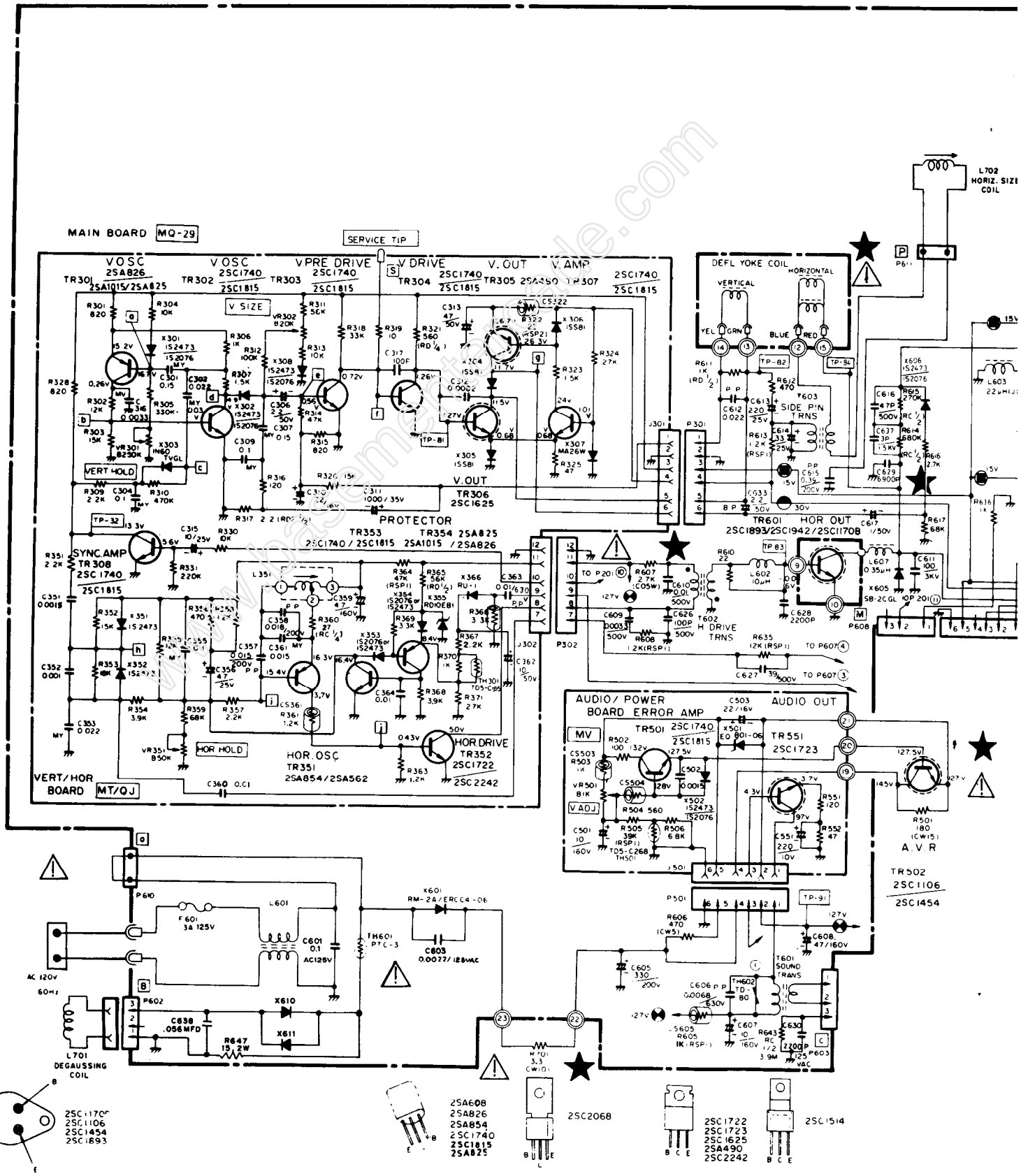

MONITOR SCHEMATIC DIAGRAM

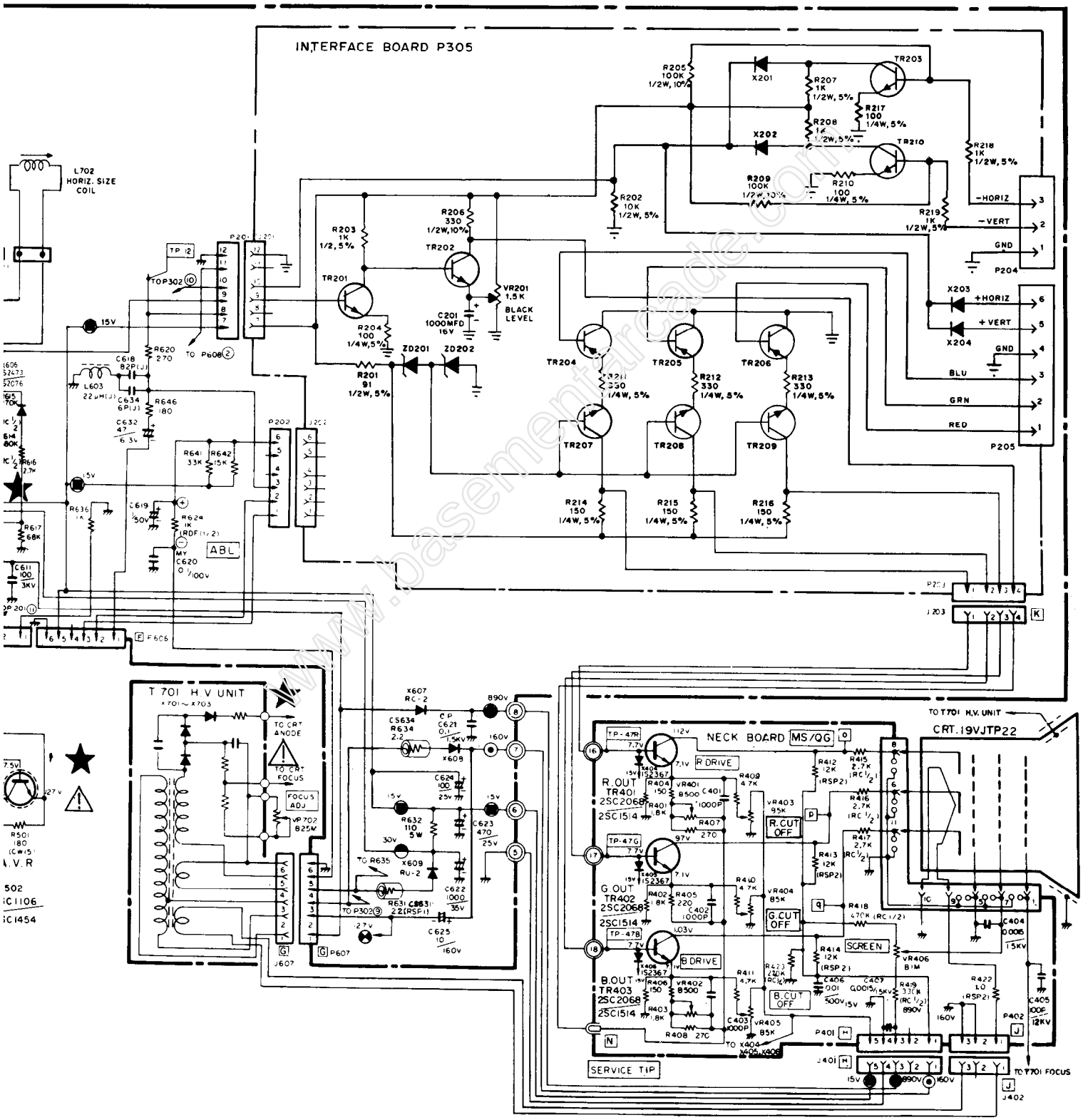

VERT/HOR BOARD (MT/QJ)

RESISTORS

Ref. No.	Part No.	Description
R301	203X6500-628	820 Ohm, ± 5%, 1/8W Carbon
R302	203X6500-902	12k Ohm, ± 5%, 1/8W Carbon
R303	203X6500-927	15k Ohm, ± 5%, 1/8W Carbon
R304	203X6500-886	10k Ohm, ± 5%, 1/8W Carbon
R305	203X6501-241	330k Ohm, ± 5%, 1/8W Carbon
R306	203X6500-645	1k Ohm, ± 5%, 1/8W Carbon
R307	203X6500-689	1.5k Ohm, ± 5%, 1/8W Carbon
R309	203X6500-724	2.2k Ohm, ± 5%, 1/8W Carbon
R310	203X6501-285	470k Ohm, ± 5%, 1/8W Carbon
R311	203X6501-065	56k Ohm, ± 5%, 1/8W Carbon
R312	203X6501-126	100k Ohm, ± 5%, 1/8W Carbon
R313	203X6001-326	10k Ohm, ± 5%, 1/8W Carbon
R314	203X6501-044	47k Ohm, ± 5%, 1/8W Carbon
R315	203X6500-628	820 Ohm, ± 5%, 1/8W Carbon
R316	203X6500-420	120 Ohm, ± 5%, 1/8W Carbon
R317	203X6206-441	2.2 Ohm, ± 5%, 1/2W Carbon
R319	203X6500-169	100 Ohm, ± 5%, 1/8W Carbon
R320	203X6500-927	15k Ohm, ± 5%, 1/8W Carbon
R321	203X6700-509	560 Ohm, ± 5%, 1/2W Carbon
R322	203X9100-121	22 Ohm, ± 5%, 2W M.O.
R323	203X6500-689	1.5K Ohm, ± 5%, 1/8W Carbon
R324	203X6500-988	27k Ohm, ± 5%, 1/8W Carbon
R325	203X6500-326	47 Ohm, ± 5%, 1/8W Carbon
R328	203X6500-628	820 Ohm, ± 5%, 1/8W Carbon
R330	203X6500-886	10k Ohm, ± 5%, 1/8W Carbon
R331	203X6501-209	220k Ohm, ± 5%, 1/8W Carbon
R351	203X6500-724	2.2k Ohm, ± 5%, 1/8W Carbon
R352	203X6500-927	15k Ohm, ± 5%, 1/8W Carbon
R353	203X6500-944	18k Ohm, ± 5%, 1/8W Carbon
R354	203X6500-783	3.9k Ohm, ± 5%, 1/8W Carbon
R355	203X6500-902	12k Ohm, ± 5%, 1/8W Carbon
R356	203X6500-561	470 Ohm, ± 5%, 1/4W Comp.
R357	203X6500-724	2.2k Ohm, ± 5%, 1/8W Carbon
R358	203X6500-666	1.2k Ohm, ± 5%, 1/8W Carbon
R359	203X6501-088	68k Ohm, ± 5%, 1/8W Carbon
R360	203X5500-471	27 Ohm, ± 5%, 1/4W Comp.
R361	203X6000-998	1.2k Ohm, ± 5%, 1/8W Carbon
R363	203X6500-666	1.2k Ohm, ± 5%, 1/8W Carbon
R364	203X9014-988	47k Ohm, ± 5%, 1W M.O.
R365	203X6700-989	56k Ohm, ± 5%, 1/2W Carbon
R366	203X6001-148	3.3k Ohm, ± 5%, 1/8W Carbon
R367	340X2222-734	2.2k Ohm, ± 5%, 1/2W Carbon
R368	203X6500-785	3.9k Ohm, ± 5%, 1/8W Carbon
R369	203X6500-762	3.3k Ohm, ± 5%, 1/4W Carbon
R370	302X6100-961	1k Ohm, ± 5%, 1/4W Carbon
R371	203X6104-751	2.7k Ohm, ± 5%, 1/4W Carbon
VR301	204X2122-093	Varistor, 250K Ohm, Vert. Hold
VR302	204X2114-065	Varistor, 20K Ohm, Vert. Size
VR351	204X2114-059	Varistor, 50K Ohm, Hor. Hold

CAPACITORS

Ref. No.	Part No.	Description
C301	203X1100-928	0.15 uF, 50V, ± 10% Mylar
C302	203X1100-573	0.022 uF, 50V, ± 10% Mylar
C304	203X1100-858	0.1 uF, 50V, ± 10% Mylar
C306	203X0025-026	2.2 uF, 50V, Electrolytic
C307	203X1100-928	0.15 uF, 50V, ± 10% Mylar
C309	203X1100-858	0.1 uF, 50V, ± 10% Mylar
C310	203X0010-011	22 uF, 16V Electrolytic
C311	203X0020-099	1000 uF, 35V Electrolytic
C312	202X7000-469	0.0082 uF, 50V, ± 10% Ceramic

CAPACITORS (CONT.)

Ref. No.	Part No.	Description
C313	203X0025-087	47 uF, 50V Electrolytic
C315	203X0015-082	10 uF, 25V Electrolytic
C316	203X1100-220	3300 uF, 50V, ± 10% Mylar
C317	202X8000-616	100 pF, 50V, ± 10% Ceramic
C351	202X7000-281	1500 pF, 50V, ± 10% Ceramic
C352	202X7000-247	1000 pF, 50V, ± 10% Ceramic
C353	203X1100-573	0.022 uF, 50V, ± 10% Mylar
C355	203X1100-858	0.1 uF, 50V, ± 10% Mylar
C356	203X0015-105	4.7 uF, 25V Electrolytic
C357	203X1201-013	0.015uF, 200V ± 10% PP
C358	203X1201-034	0.018 uF, 200V, ± 10% PP
C359	203X0040-013	4.7 uF, 160V Electrolytic
C360	202X7000-482	0.01 uF, 50V, ± 10% Ceramic
C361	203X1100-509	0.015 uF, 50V, ± 10% Mylar
C362	203X0025-058	10 uF, 50V Electrolytic
C363	203X1205-487	0.01 uF, 630V, ± 10% PP
C364	202X7000-482	0.01 uF, 50V, ± 10% Ceramic

SEMICONDUCTORS

Ref. No.	Part No.	Description
TR301	200X4082-614	Transistor, 2SA826Q
TR302	200X3174-006	Transistor, 2SC1740Q
TR303	200X3174-006	Transistor, 2SA1740Q
TR304	200X3174-006	Transistor, 2SC1740Q
TR305	200X4049-081	Transistor, 2SA490YLBGLI
TR306	200X3162-538	Transistor, 2SC1625YLBGLI
TR307	200X3174-014	Transistor, 2SC1740R
TR308	200X3174-006	Transistor, 2SC1740Q
TR351	200X4085-415	Transistor, 2SA854Q
TR352	200X3172-208	Transistor, 2SC1722BKS
TR353	200X3174-006	Transistor, 2SC1740Q
TR354	200X4082-614	Transistor, 2SA826Q
X301	201X2010-144	Diode, (SI) IS2473-T72
X302	201X2010-144	Diode, (SI) IS2473-T72
X303	200X8000-026	Diode, (GE), IN60TVGL
X304	200X8010-165	Diode (SI) ISS81
X305	201X2010-165	Diode (SI) ISS81
X306	201X2010-165	Diode (SI) ISS81
X307	200X8010-102	Diode (SI) MA26W
X308	200X8010-094	Diode (SI) IS2473
X351	201X2010-144	Diode (SI) IS2473-T72
X352	201X2010-144	Diode (SI) IS2473-T72
X353	201X2010-144	Diode (SI) IS2473-T72
X354	201X2010-144	Diode (SI) IS2473-T72
X355	200X8220-851	Diode (Zener) RD10EBI
X366	200X8100-130	Diode (HS) RU-1 0.3 US

MISCELLANEOUS

Ref. No.	Part No.	Description
J301	204X9300-958	Socket, 6 Pin
J302	204X9300-958	Socket, 6 Pin
P301	204X9601-195	Plug, 6 Pin
P302	204X9601-195	Plug, 6 Pin
TH301	201X0000-534	Thermistor

TRANSFORMERS & COILS

Ref. No.	Part No.	Description
L351	201X5200-091	Coil, Horiz. Osc.

POWER BOARD (MV)

RESISTORS

Ref. No.	Part No.	Description
R501	204X1725-052	180 Ohm, ± 10%, 15W WW
R502	203X6000-608	100 Ohm, ± 5%, 1/8W Carbon
R503	203X6000-960	1k Ohm, ± 5%, 1/8W Carbon
R504	203X6000-879	560 Ohm, ± 5%, 1/8W Carbon
R505	203X9014-965	39k Ohm, ± 5%, 1W M.O.
R506	203X6500-842	6.8k Ohm, ± 5%, 1/8W Carbon
R551	203X6500-420	120 Ohm, ± 5%, 1/8W Carbon
VR501	204X2050-001	Varistor Vert. Adj.

CAPACITORS

Ref. No.	Part No.	Description
C501	203X0040-020	10 uF, 160V Electrolytic
C502	202X7000-281	1500 pF, 50V, ± 10% Ceramic
C503	203X0010-011	22 uF, 16V Electrolytic
C551	203X0005-046	220 uF, 10V Electrolytic

SEMICONDUCTORS

Ref. No.	Part No.	Description
TR501	200X3174-006	Transistor, 2SC1740Q
△★TR502	200X3145-404	Transistor, 2SC1454
TR551	200X3172-305	Transistor, 2SC1723
X501	201X2230-042	Diode, (SI) Zener EQB01-06V
X502	201X2010-144	Diode, (SI) IS2473-T72

MISCELLANEOUS

Ref. No.	Part No.	Description
J501	204X9300-958	Socket, 6 Pin
P501	204X9601-195	Plug, 6 Pin
TH501	201X0000-618	Thermistor

NECK BOARD (MS/QG)

RESISTORS

Ref. No.	Part No.	Description
R401	203X6500-709	1.8k Ohm ± 5% 1/8W Carbon
R402	203X6500-709	1.8k Ohm ± 5% 1/8W Carbon
R403	203X6500-709	1.8k Ohm ± 5% 1/8W Carbon
R404	203X6500-447	150 Ohm ± 5% 1/8W Carbon
R405	203X6500-481	220 Ohm ± 5% 1/8W Carbon
R406	203X6500-447	150 Ohm ± 5% 1/8W Carbon
R407	203X6500-508	270 Ohm ± 5% 1/8W Carbon
R408	203X6500-508	270 Ohm ± 5% 1/8W Carbon
R409	203X6500-800	4.7k Ohm ± 5% 1/8W Carbon
R410	203X6500-800	4.7k Ohm ± 5% 1/8W Carbon
R411	203X6500-800	4.7k Ohm ± 5% 1/8W Carbon
R412	203X9104-809	12k Ohm ± 5% 2.0W Metal Oxide
R413	203X9104-809	12k Ohm ± 5% 2.0W Metal Oxide
R414	203X9104-809	12k Ohm ± 5% 2.0W Metal Oxide
R415	203X5601-313	2.7k Ohm ± 10% 1/2W Comp.
R416	203X5601-313	2.7k Ohm ± 10% 1/2W Comp.
R417	203X5601-313	2.7k Ohm ± 10% 1/2W Comp.
R418	203X5602-254	470k Ohm ± 10% 1/2W Comp.
R419	203X5602-185	330k Ohm ± 10% 1/2W Comp.
R422	203X9105-117	1.0 Ohm ± 10% 2W Metal Oxide
R423	203X5102-155	270k Ohm ± 5% 1/4W Carbon
VR401	204X2115-014	500 Ohm Varistor R Drive
VR402	204X2115-014	500 Ohm Varistor B Drive
VR403	204X2115-006	5k Ohm Varistor R Cutoff
VR404	204X2115-006	5k Ohm Varistor G Cutoff
VR405	204X2115-006	5k Ohm Varistor B Cutoff
VR406	204X2000-025	1M Ohm Varistor Screen

CAPACITORS

Ref. No.	Part No.	Description
C401	202X7000-247	1000 pF, 50V, 10% Ceramic
C402	202X7000-247	1000 pF, 50V, 10% Ceramic
C403	202X7000-247	1000 pF, 50V, 10% Ceramic
C404	202X7110-019	1500 pF, 2kV ± 10% Ceramic
C405	202X7150-018	100 pF, 12kV, ± 10% Ceramic
C406	202X7050-483	.01 uF, 500V, ± 10% Ceramic
C407	202X7110-019	1500 pF, 2kV ± 10% Ceramic
C408	202X8000-550	68 pF, 50V, ± 10% Ceramic
C409	202X8000-550	68 pF, 50V, ± 10% Ceramic
C410	202X8000-550	68 pF, 50V, ± 10% Ceramic

SEMICONDUCTORS

Ref. No.	Part No.	Description
TR401	200X3206-800	Transistor, 2SC2068, 2SC1514 (R output)
TR402	200X3206-800	Transistor, 2SC2068, 2SC1514 (G output)
TR403	200X3206-800	Transistor, 2SC2068, 2SC1514 (B output)
X404	201X2100-126	Diode, IS2367 (protector)
X405	201X2100-126	Diode, IS2367 (protector)
X406	201X2100-126	Diode, IS2367 (protector)

MISCELLANEOUS

Ref. No.	Part No.	Description
J401	206X5003-729	Socket, 5 Pin
J402	206X5003-983	Socket, 3 Pin
P401	204X9600-329	Plug, 5 Pin
P402	204X9600-254	Plug, 3 Pin

⚠★ 297X2000-072 HIGH VOLTAGE ASSEMBLY (T701)

Ref. No.	Part No.	Description
⚠★R701	204X1625-058	3.3 Ohm, ± 10% 10W WW Resistor
VR702	204X3901-125	Focus Control
X701		Diode (Si HV) } Part of T701
X702		Diode (Si HV) } Part of T701
X703		Diode (Si HV) } Part of T701

FINAL ASSEMBLY PARTS

Ref. No.	Part No.	Description
⚠★	88X-0129-506	19VJTP22 Pix Tube
	38A5554-000	Assy. Purity Shld/Degaussing
	205X9800-256	Lateral/Purity Assembly
⚠★	202X1110-810	Yoke, Deflection
	208X2000-946	CRT Socket
	297X2000-072	HV Unit (T701)
	6A0397	Plug, Line Cord
	9A2753-003	Degaussing Coil (L701)

INTERFACE BOARD (P305)

(MODEL 19K4606)

RESISTORS

Ref. No.	Part No.	Description
R201	340X3910-934	91 Ohm, 5%, 1/2W Carbon
R203	340X3102-934	1k Ohm, 5%, 1/2W Carbon
R204	340X2101-934	100 Ohm, 5%, 1/4W Carbon
R206	340X3331-944	330 Ohm, 10%, 1/2W Carbon
R207	340X3102-934	1k Ohm, 5%, 1/2W Carbon
R208	340X3152-934	1.5k Ohm, 5%, 1/4W Carbon
R209	340X2101-934	100 Ohm, 5%, 1/4W Carbon
R210	340X3102-934	1k Ohm, 5%, 1/2W Carbon
R211	340X2331-934	330 Ohm, 5%, 1/4W Carbon
R212	340X2331-934	330 Ohm, 5%, 1/4W Carbon
R213	340X2331-934	330 Ohm, 5%, 1/4W Carbon
R214	340X2201-934	200 Ohm, 5%, 1/4W Carbon
R215	340X2201-934	200 Ohm, 5%, 1/4W Carbon
R216	340X2201-934	200 Ohm, 5%, 1/4W Carbon
VR201	40X0590-017	1.5k Ohm, Black Level Control

CAPACITORS

Ref. No.	Part No.	Description
C201	45X0524-038	1000 uF, 16V Electrolytic

SEMICONDUCTORS

Ref. No.	Part No.	Description
TR201	86X0121-001	Transistor (NPN)
TR202	86X0121-001	Transistor (NPN)
TR203	86X0121-001	Transistor (NPN)
TR204	86X0066-001	Transistor (PNP)
TR205	86X0066-001	Transistor (PNP)
TR206	86X0066-001	Transistor (PNP)
TR207	86X0121-001	Transistor (NNP)
TR208	86X0121-001	Transistor (NPN)
TR209	86X0121-001	Transistor (NPN)
ZD201	66X0040-018	Diode, Zener, 6.8v, 5%, 0.5W
ZD202	66X0040-019	Diode, Zener, 3.9v, 5%, 0.5W

MISCELLANEOUS

Ref. No.	Part No.	Description
J201	204X9300-958	Socket, 6 Pin
J202	204X9300-958	Socket, 6 Pin
J203	206X5019-207	Socket, 4 Pin
P201	204X9601-195	Plug, 6 Pin
P202	204X9601-195	Plug, 6 Pin
P203	204X9600-845	Plug, 4 Pin
P205	6A0393-006	Plug, 6 Pin

www.basementarcade.com

COLOR PURITY AND VERTICAL CENTERING ADJUSTMENT

For best results, it is recommended that the purity adjustment be made in the final monitor location. If the monitor will be moved, perform this adjustment with it facing west or east. The monitor must have been operating 15 minutes prior to this procedure and the faceplate of the CRT must be at room temperature.
The monitor is equipped with an automatic degaussing circuit. However, if the CRT shadow mask has become excessively magnetized, it may be necessary to degauss it with manual coil. Do not switch the coil OFF while the raster shows any effect from the coil.
Purity Magnets are used for Color Purity and V Centering Adjustment.
Purity Adjustment procedure is as follows.

1. Remove R-G-B signal from monitor.
2. Turn Green Cut off Control (VR404) on the Neck Board fully CCW.
   Turn Red and Blue Cut off Control (VR405) fully CW.
3. Pull the Deflection Yoke backward so that the Magenta belt will appear. (See Fig. 4)
4. Move the two Purity Magnets and bring the Magenta belt to the mechanical center of the screen (See Fig. 5) The vertical center position should be set VRS to —5/64" (—2 mm) as shown in Fig. 6.
   Insert service tip "N" on Neck circuit board to "S" on Vert./Horiz. circuit board (See Fig. 13). To check, use the Green raster at low intensity. Be sure to return the service tips to their original positions for the next check.
5. Push the Deflection Yoke forward gradually and fix it at the place where the Magenta screen becomes uniform throughout.
6. Turn Cut off Control, and Drive Control and confirm that each color is uniform.
7. If the color is not uniform, re-adjust it moving Purity Magnets slightly.
8. Move a pair of Purity Magnets at the same time (do not change the angle of the pair), and adjust the vert. center to center of screen.
9. Obtain the three colors and confirm whether white uniformity is balanced.
10. Insert the temporary wedge as shown in Fig. 5 and adjust the angle of Deflection Yoke.

STATIC CONVERGENCE ADJUSTMENT

A recently developed Deflection Yoke and Electron Guns construction has been used on this equipment in combination with In-Line Guns and Black Stripe Screen to make a barrel-type magnetic-field distribution for vertical deflection and a pin-cushion-type magnetic field for horizontal deflection with which a self-converging system can be obtained. This type is different from conventional unity-magnetic field distribution type deflection yoke. 4-Pole Magnets and 6-Pole Magnets are employed for static convergence instead of a Convergence Yoke.

1. A cross hatch signal should be connected to the monitor.
2. A pair of 4-Pole Convergence Magnets are provided and adjusted to converge the blue and red beams. When the Pole opens to the left and right 45° symmetrically, the magnetic field maximizes. Red and blue beams move to the left and right oppositely (See Fig. 7-a and 7-b). Variation of the angle between the tabs adjusts the convergence of red and blue vertical lines.
   When the both 4-Pole Convergence Magnet Tabs are rotated as a pair, the convergence of the red and blue horizontal lines is adjusted.
3. A pair of 6-Pole Convergence Magnets are also provided and adjusted to converge the magenta (red + blue) to green beams.
   When the Pole opens to the left and right 30° symmetrically, the magnetic field is maximized. Red and blue beams both move to the left and right (See Fig. 8-c and 8-d).
   Variation of the opening angle adjusts the convergence of magenta to green vertical lines. When both 6-Pole Convergence Magnet Tabs are rotated as a pair the convergence of magenta to green horizontal lines is adjusted.

PRECISE ADJUSTMENT OF DYNAMIC CONVERGENCE (See Fig. 10 and 11)

1. Feed a cross hatch signal to the monitor.
2. Insert the temporary wedge and fix Deflection Yoke so as to obtain the best circumference convergence (See Fig. 10 and 11).
   NOTE:
   The temporary wedges may need to be moved during adjustments.
4. Insert three rubber wedges to the position as shown in Fig. 9 to obtain the best circumference convergence.

NOTE:

1) Tilting the angle of the yoke up and down adjusts the crossover of both vertical and horizontal red and blue lines. See Fig. 10 (a) and (b).
2) Tilting the angle of the yoke sideways adjusts the parallel convergence of both horizontal and vertical lines at the edges of the screen. See Fig. 11-a and b.
3) Use three rubber wedges (thick and thin rubber wedges are used for a purpose).
4) The angle of each rubber wedges are shown in Fig. 9.
5) After three rubber wedges have been inserted, pull out the temporary wedge.
6) Fix the rubber wedges with chloroprene rubber adhesive.

BLACK AND WHITE TRACKING (With R/G.B. inputs grounded)

1. Set Black Level Control (VR201) to mid point.
2. Set Red and Blue Drive Controls (VR401 & VR402) to their mechanical center.
3. Set the G2 Screen Control (VR406) and the 3 Cut-off Controls (VR403, VR404, & VR405) to minimum (CCW).
4. Slowly turn up G2 screen control until the first faint color appears.
5. Slowly turn up the other two color cut-off controls in turn to match the first.
6. Remove ground from R/G/B/ inputs. Adjust Red and Blue Drive Controls (VR401 & VR402) for white screen.

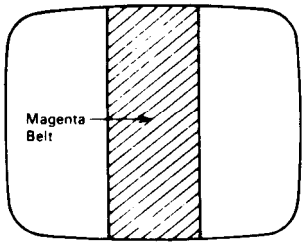

FIGURE 4

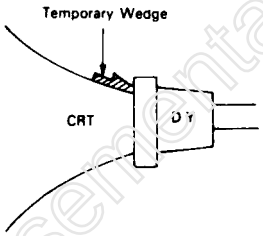

FIGURE 5

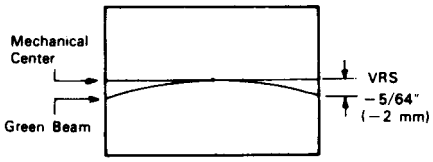

FIGURE 6

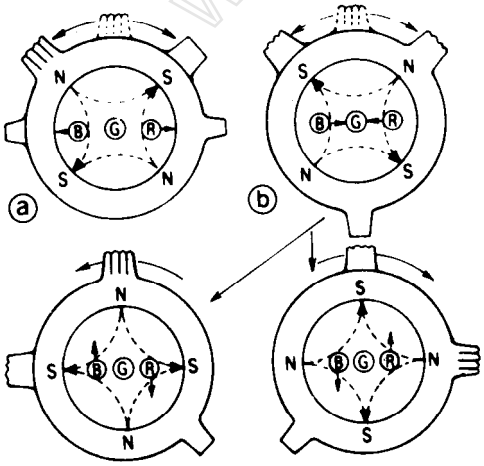

4-Pole Magnets and the Movement of Beams

FIGURE 7

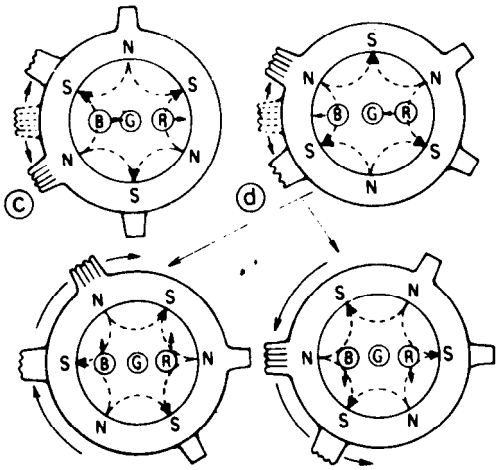

6-Pole Magnets and the Movement of Beams

FIGURE 8

www.basementarcade.com

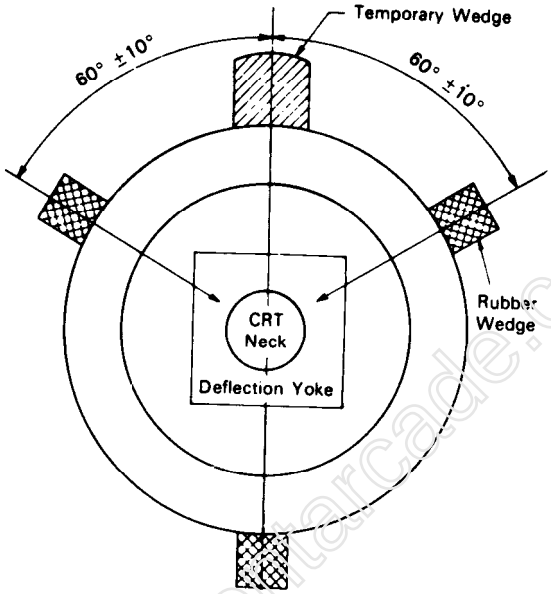

FIGURE 9

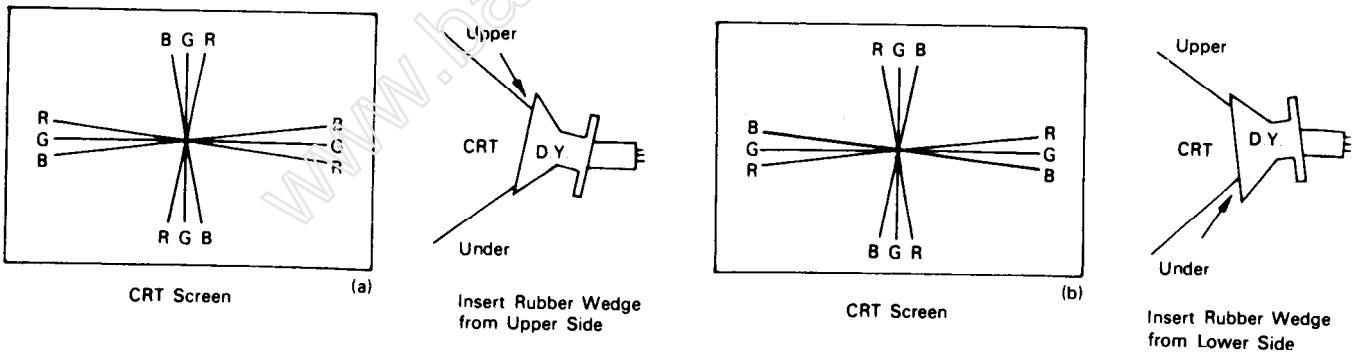

FIGURE 10

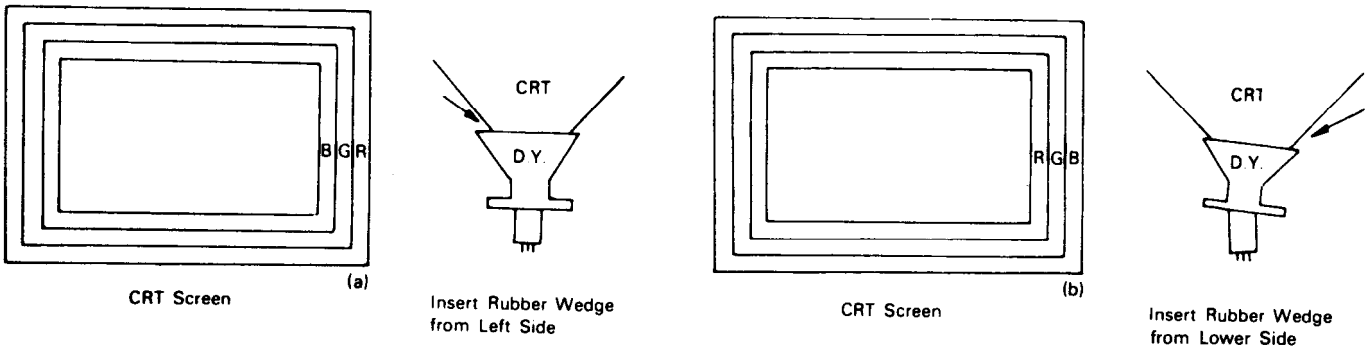

FIGURE 11

www.basementarcade.com

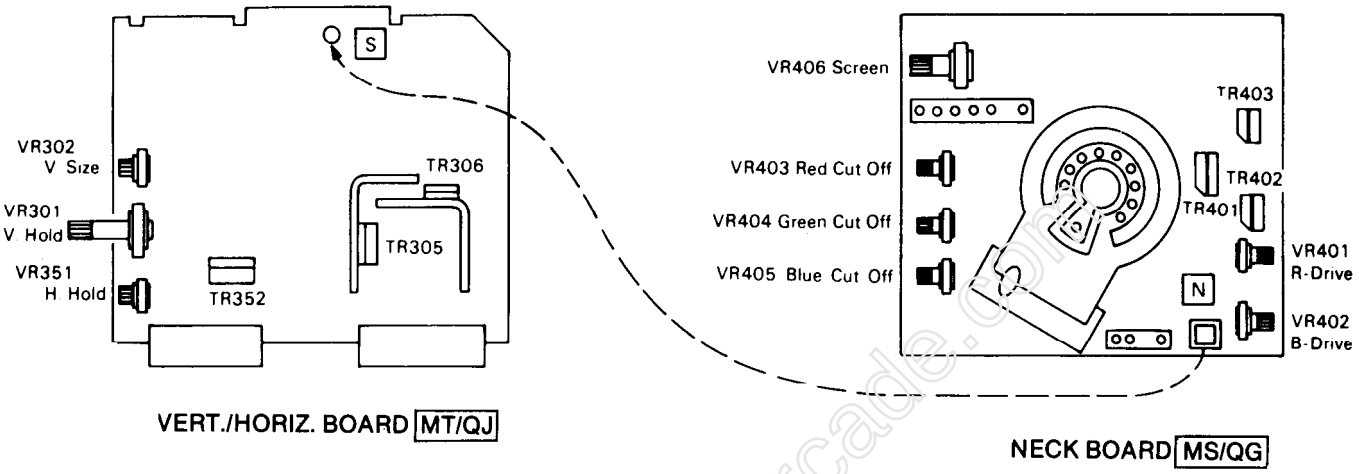

FIGURE 12

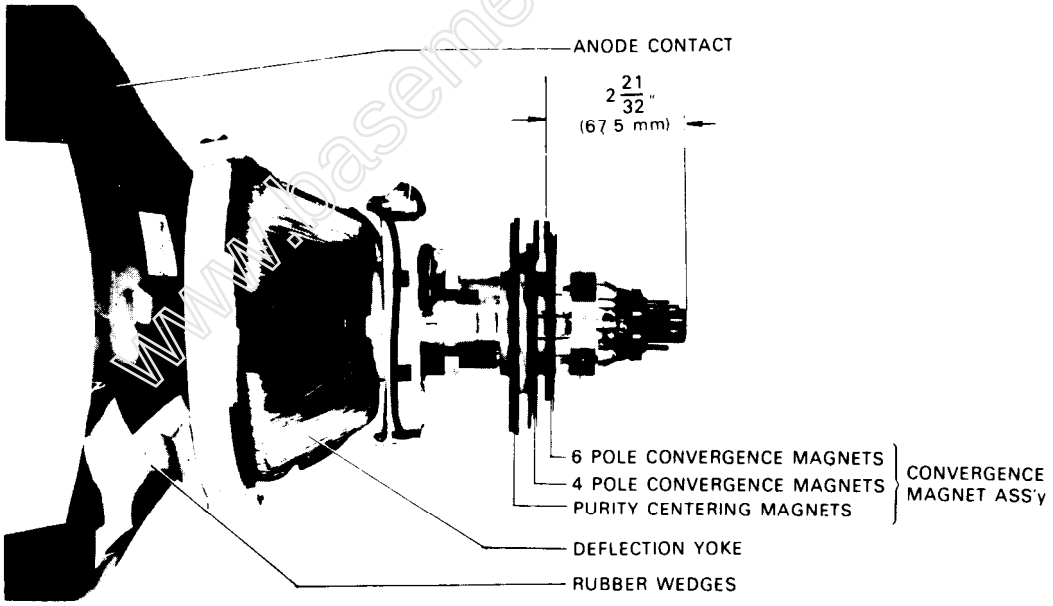

FIGURE 13. PICTURE TUBE NECK COMPONENTS LOCATION

www.basementarcade.com

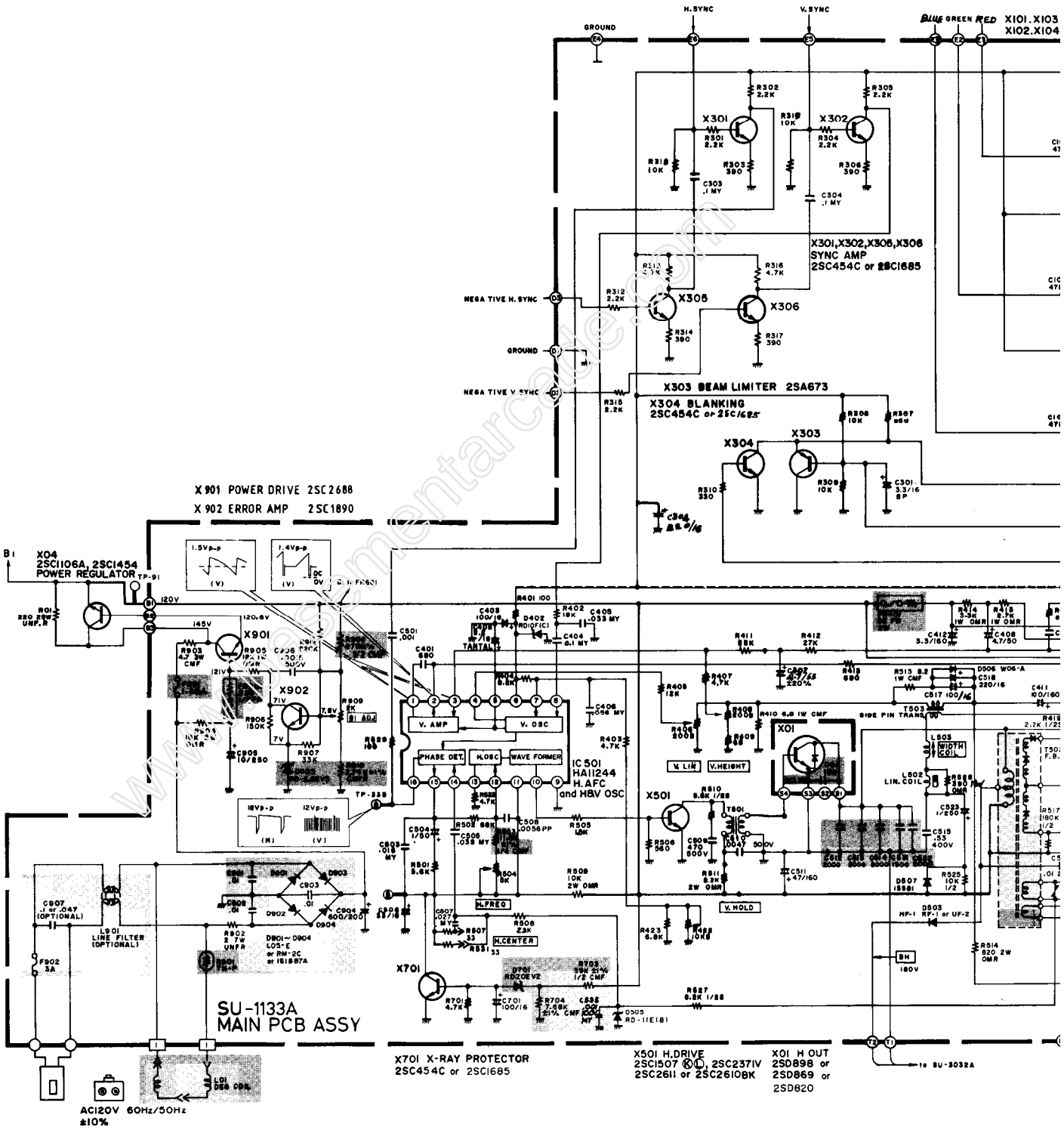
GROUND
H.SYNC
V.SYNC
BLUE GREEN RED
X101.X103
X102.X104
X301,X302,X305,X306
SYNC AMP
2SC454C or 2SC1685
NEGATIVE H. SYNC
NEGATIVE V SYNC
X303 BEAM LIMITER 2SA673
X304 BLANKING
2SC454C or 2SC1685
X901 POWER DRIVE 2SC2688
X902 ERROR AMP 2SC1890
X04
2SC1106A, 2SC1454
POWER REGULATOR
IC 501
HA11244
H.AFC
and H&V OSC
V. AMP
V. OSC
PHASE DET.
H.OSC
WAVE FORMER
H.FREQ
H.CENTER
V. LIN
V.HEIGHT
V. HOLD
WIDTH COIL
LIN. COIL
SIDE PIN TRANS.
LINE FILTER (OPTIONAL)
SU-1133A
MAIN PCB ASSY
X701 X-RAY PROTECTOR
2SC454C or 2SC1685
X501 H.DRIVE
2SC1507 Ⓚ Ⓛ, 2SC2371V
2SC2611 or 2SC2610BK
X01 H OUT
2SD898 or
2SD869 or
2SD820
AC120V 60Hz/50Hz
±10%

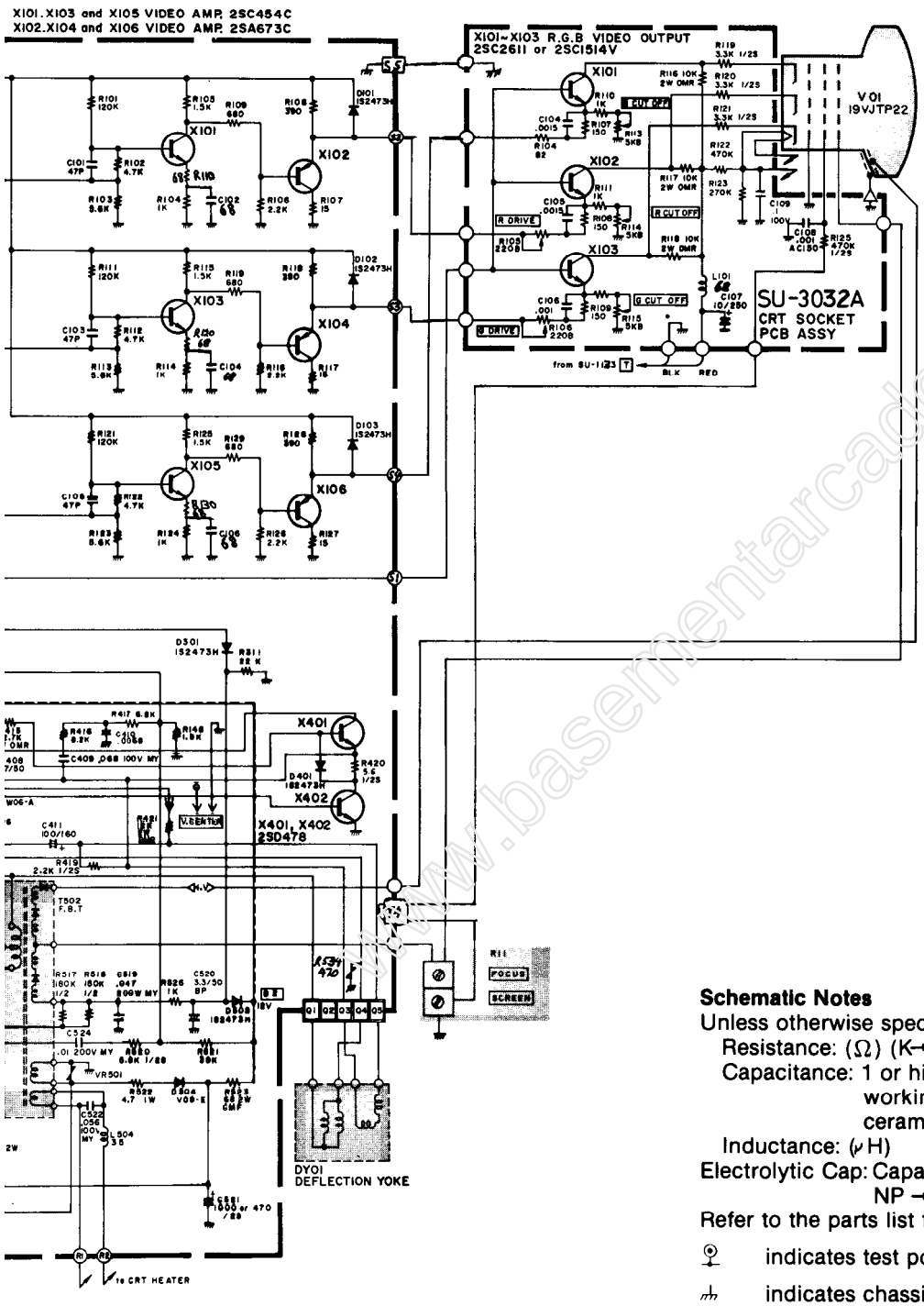

Schematic Notes

Unless otherwise specified

Resistance: (Ω) (K→KΩ, M→MΩ), 1/4 (W) carbon resistor

Capacitance: 1 or higher→ (pF), less than 1→ (μF)
working voltage→ 50 (V)
ceramic capacitor

Inductance: (μH)

Electrolytic Cap: Capacitance Value (μF)/working voltage (V),
NP → non-polar (or bipolar) electrolytic cap.

Refer to the parts list for additional component information.

indicates test point connection

indicates chassis ground unless otherwise specified

Hz indicates cycles per second

For **safety** purposes (and continuing reliability)

⚠ replace all components marked with safety symbol with identical type.
NOTE: FR → fusible resistor

00-4147-04
G07-CB0

Parts identification on circuit boards:
e.g. SU1126A (R107 = R1107)
SU3030A (R113 = R3113)

www.basementarcade.com

REPLACEMENT PARTS LIST - ELECTROHOME 19'' MONITOR

Components identified by the ⚠ symbol in the PARTS LIST and on the Schematic have special characteristics important to safety.

DO NOT degrade the safety of the set through improper servicing.

Abbreviations for Resistors and Capacitors

Resistor

C R	:	Carbon Resistor
Comp. R	:	Composition Resistor
OM R	:	Oxide Metal Film Resistor
V R	:	Variable Resistor
MF R	:	Metal Film Resistor
CMF R	:	Coating Metal Film Resistor
UNF R	:	Nonflammable Resistor
F R	:	Fusible Resistor

Capacitor

C Cap.	:	Ceramic Capacitor
M Cap	:	Mylar Capacitor
E Cap.	:	Electrolytic Capacitor
BP E Cap.	:	Bi-Polar (or Non-Polar) Electrolytic Capacitor
MM Cap.	:	Metalized Mylar Capacitor
PP Cap.	:	Polypropylene Capacitor
MPP Cap.	:	Metalized PP Capacitor
PS Cap	:	Polystyrol Capacitor
Tan. Cap.	:	Tantal Capacitor

NOTE: When ordering replacement parts please specify the part number as shown in this list including part name, and model number. Complete information will help expedite the order.

Use of substitute replacement parts which do not have the same safety characteristics as specified, may create shock, fire or other hazards. For maximum reliability and performance, all parts should be replaced by those having identical specifications.

www.basementarcade.com

SERVICE REPLACEMENT PARTS LIST

Symbol	Description	Part Number
	Main P.C.B. Ass'y	SU-1133A
	CRT Socket P.C.B. Ass'y	SU-3032A
	Purity Shield Ass'y	07-220083-03

Outside of the P.C.B. Ass'y

Symbol	Description	Part Number
	Picture Tube 19"	17-7198-03
⚠	⚠Deflection Yoke	A29779-D = 21-141-01
	PC Magnet	A75034-B = 29-32-01
⚠	⚠Flyback Transf.	A29951-B
⚠	⚠HVR	A46600-A
R05	UNF Resistor 220Ω,25W K	QRF258K-221
C04	C Capacitor 150pF. AC1.5KV	QCZ0101-005
X01	Si. Transistor	2SD870
X02	Si. Transistor	2SC1106A
SC	Screw #8-⅜	31-610818-06
SC	Screw ¼ x ¾ Pix Tube Mtg. (4)	31-601418-12
WA	Pyramidal Lock Washer (4)	33-255-01
	Nut Retainer, Pix Tube Mtg. (4)	33-494-01
	Clip — P.C.B. Support	33-629-02
	Standoff	33-670-010R-02
	Wire Terminal (Gnd. Strap)	34-228-03
	Terminal Lug (Gnd.)	34-33-04
	Groundstrap Assy.	34-574-02
	Grounding Spring	35-212-03
	Wire Hook (Gnd. Strap)	35-3053-02
	Purity Shield Holddown Clamp	35-2348-01
	Support Brkt. RH	35-3890-01
	Support Brkt. LH	35-3890-02
	Chassis Base	38-449-02
	Yoke Wedge (3)	39-1233-01

Purity Shield Ass'y. Parts List

Symbol	Description	Part Number
	Degaussing Coil	21-1007-30
D911, D912	Rectifier 1 Amp 600V (2)	28-22-27
	Pin Terminal (2)	34-708-01
	Pin Terminal Housing	34-709-01
	Purity Shield (2 pcs.)	35-3847-01
	Purity Shield (2 pcs.)	35-3847-02
C911	Capacitor 100nF 10% 400V	48-171544-62
R921	Resistor, Wirewound 33Ω, 4W	42-113301-03
	Fire Retardent Term. Strip 4 Lug	34-492-09

CRT Socket P.C.B. Ass'y (SU-3032A) Parts List

Resistors

Symbol	Description	Part Number
R3105	V R 200	QVZ3234-022
R3106	V R 200	QVZ3234-022
R3113	V R 5K	QVZ3234-053
R3114	V R 5K	QVZ3234-053
R3115	V R 5K	QVZ3234-053
R3116	OM R 10KΩ2W J	QRG029J-103
R3117	OM R 10KΩ2W J	QRG029J-103
R3118	OM R 10KΩ2W J	QRG029J-103
R3119	Comp. R 3.3KΩ½W K	QRZ0039-332
R3120	Comp. R 3.3KΩ½W K	QRZ0039-332
C3121	Comp. R 3.3KΩ½W K	QRZ0039-332

Capacitors

Symbol	Description	Part Number
C3107	E Cap. 10uF 250V A	QEW53EA-106
C3108	C Cap. 1000pF DC1400V P	QCZ9001-102M

Coils

Symbol	Description	Part Number
L3101	Peaking Coil	QQL043K-101

www.bermentarcade.com

Semiconductors

Symbol	Description	Part Number
X3101	Si. Transistor	2SC1514VC
X3102	Si. Transistor	2SC1514VC
X3103	Si. Transistor	2SC1514VC

Miscellaneous

Symbol	Description	Part Number
⚠	⚠CRT Socket	A76068

Main PCB Ass'y (SU-1133A) Parts List

Resistors

Symbol	Description			Part Number
R1406	V	R	200Ω	QVZ3230-002
R1408	V	R	200Ω	QVZ3230-002
R1410	CMF	R	6.8Ω1W J	QRX019J-6R8
R1414	OM	R	3.3KΩ1W J	QRG019J-332
R1415	OM	R	2.7KΩ1W J	QRG019J-272
R1421	OM	R	12KΩ2W J	QRG026J-123Z
R1422	V	R	10KΩ	QVZ3230-014
⚠FR1401	⚠F	R	68Ω2W K	QRH024K-680M
⚠R1503	⚠CMF	R	11.8KΩ¼W +1%	QRV142F-1182
R1504	V	R	5KΩ	QVZ3230-053
R1509	OM	R	10KΩ2W J	QRG026J-103Z
R1512	OM	R	8.2KΩ2W J	QRG026J-822Z
R1514	OM	R	820Ω2W J	QRG026J-821Z
R1515	CMF	R	8.2Ω1W J	QRX019J-8R2
R1522	CMF	R	4.7Ω1W J	QRX019J-4R7
R1523	OM	R	68Ω2W J	QRG026J-680Z
R1528	OM	R	390Ω1W J	QRG019J-391
R1534	ZN	R		ERZ-C05ZK471
VR1501	ZN	R		ERZ-C05DK271
⚠R1703	⚠CMF	R	39Ω½W +1%	QRV122F-3902
⚠R1704	⚠CMF	R	7.68KΩ¼W +1%	QRV142F-7681
⚠R1901	⚠Posistor			A75414
R1902	UNF	R	2Ω7W K	QRF076K-2R0
R1903	CMF	R	4.7Ω3W J	QRX039J-4R7
R1904	OM	R	10KΩ2W J	QRG026J-103Z
R1905	OM	R	18KΩ1W J	QRG019J-183
⚠Q1908	⚠CMF	R	47Ω½W +1%	QRV122F-470Z
⚠R1909	V	R	2KΩ	QVP5A0B-023E
R1910	⚠CMF	R	2.74KΩ¼W +1%	QRV142F-274I
⚠FR1901	⚠F	R	220Ω½W K	QRH124K-221M

Capacitors

Symbol	Description	Part Number
C1301	BPE Cap. 3.3uF 50V A	QEN61HA-335Z
C1402	Tan. Cap. 2.2uF 16V K	QEE51CK-225B
C1407	E Cap. 4.7uF 6.3V A	QEW51JA-475
C1411	E Cap. 100uF 160V A	QEW52CA-107
C1412	E Cap. 3.3uF 160V A	QEW52CA-335
C1508	PP Cap. 5600uF 50V J	QFP31HJ-562
⚠C1512	⚠PP Cap. 2000pF DC1500V J	QFZ0082-202
⚠C1513	⚠PP Cap. 2000pF DC1500V J	QFZ0082-202
⚠C1514	⚠PP Cap. 2000pF DC1500V J	QFZ0082-202
C1515	PP Cap. 0.53uF DC1200V J	QFZ0067-534
C1520	BPE Cap. 3.3uF 50V A	QEN61HA-335Z
C1523	E Cap. 1uF 160V A	QEW62CA-105Z
C1524	M Cap. 0.1uF 200V K	QFM720K-104M
⚠C1531	⚠PP Cap. 2000pF DC1500V J	QFZ0082-202
⚠C1532	⚠PP Cap. 1500pF DC1500V J	QFZ0082-152
C1904	E Cap.	QEY0034-001
C1905	E Cap. 10uF 250V A	QEW52EA-106

www.basementarcade.com

Semiconductors

Symbol	Description	Part Number
X3101	Si. Transistor	2SC1514VC
X3102	Si. Transistor	2SC1514VC
X3103	Si. Transistor	2SC1514VC

Miscellaneous

Symbol	Description	Part Number
⚠	⚠CRT Socket	A76068

Main PCB Ass'y (SU-1133A) Parts List

Resistors

Symbol	Description			Part Number
R1406	V	R	200Ω	QVZ3230-002
R1408	V	R	200Ω	QVZ3230-002
R1410	CMF	R	6.8Ω1W J	QRX019J-6R8
R1414	OM	R	3.3KΩ1W J	QRG019J-332
R1415	OM	R	2.7KΩ1W J	QRG019J-272
R1421	OM	R	12KΩ2W J	QRG026J-123Z
R1422	V	R	10KΩ	QVZ3230-014
⚠FR1401	⚠F	R	68Ω2W K	QRH024K-680M
⚠R1503	⚠CMF	R	11.8KΩ¼W +1%	QRV142F-1182
R1504	V	R	5KΩ	QVZ3230-053
R1509	OM	R	10KΩ2W J	QRG026J-103Z
R1512	OM	R	8.2KΩ2W J	QRG026J-822Z
R1514	OM	R	820Ω2W J	QRG026J-821Z
R1515	CMF	R	8.2Ω1W J	QRX019J-8R2
R1522	CMF	R	4.7Ω1W J	QRX019J-4R7
R1523	OM	R	68Ω2W J	QRG026J-680Z
R1528	OM	R	390Ω1W J	QRG019J-391
R1534	ZN	R		ERZ-C05ZK471
VR1501	ZN	R		ERZ-C05DK271
⚠R1703	⚠CMF	R	39Ω½W +1%	QRV122F-3902
⚠R1704	⚠CMF	R	7.68KΩ¼W +1%	QRV142F-7681
⚠R1901	⚠Posistor			A75414
R1902	UNF	R	2Ω7W K	QRF076K-2R0
R1903	CMF	R	4.7Ω3W J	QRX039J-4R7
R1904	OM	R	10KΩ2W J	QRG026J-103Z
R1905	OM	R	18KΩ1W J	QRG019J-183
⚠Q1908	⚠CMF	R	47Ω½W +1%	QRV122F-470Z
⚠R1909	V	R	2KΩ	QVP5A0B-023E
R1910	⚠CMF	R	2.74KΩ¼W +1%	QRV142F-274I
⚠FR1901	⚠F	R	220Ω½W K	QRH124K-221M

Capacitors

Symbol	Description		Part Number
C1301	BPE	Cap. 3.3uF 50V A	QEN61HA-335Z
C1402	Tan.	Cap. 2.2uF 16V K	QEE51CK-225B
C1407	E	Cap. 4.7uF 6.3V A	QEW51JA-475
C1411	E	Cap. 100uF 160V A	QEW52CA-107
C1412	E	Cap. 3.3uF 160V A	QEW52CA-335
C1508	PP	Cap. 5600uF 50V J	QFP31HJ-562
⚠C1512	⚠PP	Cap. 2000pF DC1500V J	QFZ0082-202
⚠C1513	⚠PP	Cap. 2000pF DC1500V J	QFZ0082-202
⚠C1514	⚠PP	Cap. 2000pF DC1500V J	QFZ0082-202
C1515	PP	Cap. 0.53uF DC1200V J	QFZ0067-534
C1520	BPE	Cap. 3.3uF 50V A	QEN61HA-335Z
C1523	E	Cap. 1uF 160V A	QEW62CA-105Z
C1524	M	Cap. 0.1uF 200V K	QFM720K-104M
⚠C1531	⚠PP	Cap. 2000pF DC1500V J	QFZ0082-202
⚠C1532	⚠PP	Cap. 1500pF DC1500V J	QFZ0082-152
C1904	E	Cap.	QEY0034-001
C1905	E	Cap. 10uF 250V A	QEW52EA-106

www.basementtrade.com

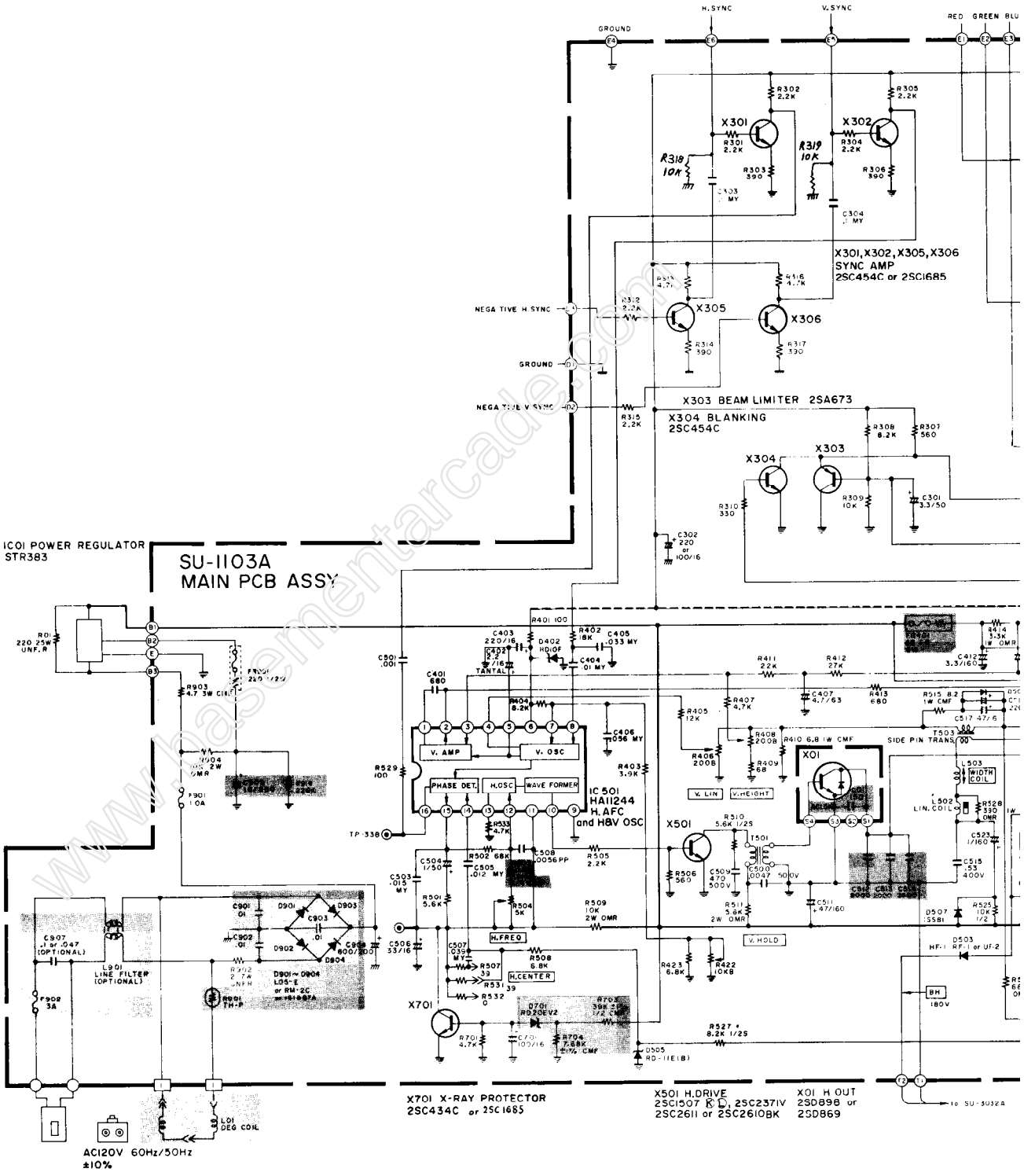

www.basementarcade.com

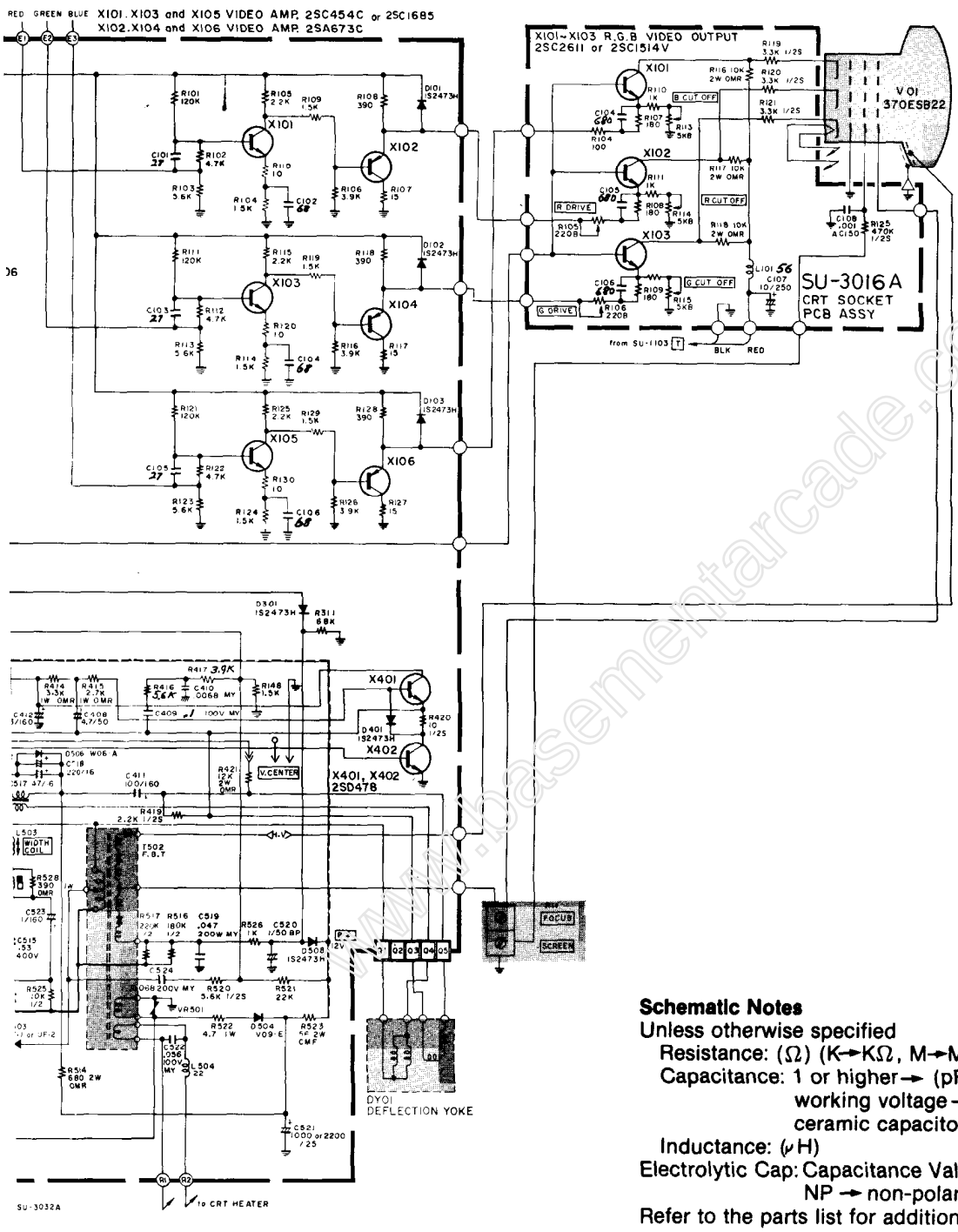

Schematic Notes

Unless otherwise specified

Resistance: (Ω) (K→KΩ, M→MΩ), 1/4 (W) carbon resistor

Capacitance: 1 or higher→ (pF), less than 1→ (μF)
working voltage→ 50 (V)
ceramic capacitor

Inductance: (μH)

Electrolytic Cap: Capacitance Value (μF)/working voltage (V),
NP → non-polar (or bipolar) electrolytic cap.

Refer to the parts list for additional component information.

indicates test point connection

indicates chassis ground unless otherwise specified

Hz indicates cycles per second

For **safety** purposes (and continuing reliability)

⚠ replace all components marked with safety symbol with identical type.
NOTE: FR → fusible resistor

Parts identification on circuit boards:
e.g. SU1126A (R107 = R1107)
SU3030A (R113 = R3113)

G07-FBO
00-4147-03

www.basementarcade.com

REPLACEMENT PARTS LIST - ELECTROHOME 13'' MONITOR

Components identified by the ⚠ symbol in the PARTS LIST and on the Schematic have special characteristics important to safety.

DO NOT degrade the safety of the set through improper servicing.

Abbreviations for Resistors and Capacitors

Resistor

C R	:	Carbon Resistor
Comp. R	:	Composition Resistor
OM R	:	Oxide Metal Film Resistor
V R	:	Variable Resistor
MF R	:	Metal Film Resistor
CMF R	:	Coating Metal Film Resistor
UNF R	:	Nonflammable Resistor
F R	:	Fusible Resistor

Capacitor

C Cap.	:	Ceramic Capacitor
M Cap	:	Mylar Capacitor
E Cap.	:	Electrolytic Capacitor
BP E Cap.	:	Bi-Polar (or Non-Polar) Electrolytic Capacitor
MM Cap.	:	Metalized Mylar Capacitor
PP Cap.	:	Polypropylene Capacitor
MPP Cap.	:	Metalized PP Capacitor
PS Cap	:	Polystyrol Capacitor
Tan. Cap.	:	Tantal Capacitor

NOTE: When ordering replacement parts please specify the part number as shown in this list including part name, and model number. Complete information will help expedite the order.

Use of substitute replacement parts which do not have the same safety characteristics as specified, may create shock, fire or other hazards. For maximum reliability and performance, all parts should be replaced by those having identical specifications.

Symbol	Description	Part Number
	Main P.C.B. Ass'y	SU-1103A
	CRT Socket P.C.B. Ass'y	SU-3016A

Outside of the P.C.B. Ass'y

Symbol	Description	Part Number
⚠V01	⚠Picture Tube	370ESB22(E)
⚠DY01	⚠Deflection Yoke	C29123-V
	PC Magnet	A76366-A
	Wedge	C30006
	⚠Flyback Transf.	A19183-A
⚠R11	⚠Focus V R	A46606-A
⚠R05	UNF Resistor 220Ω, 25W. K	QRF258K-221
⚠C04	⚠C Capacitor 150 pF, AC1.5KV	QCZ0101-005
X01	Si. Transistor	2SD869
IC01	IC Regulator	STR383
L01	Degausing Coil	21-1007-31
	Degausing Coil Pin Terminal (2)	34-708-01
	Degausing Coil Pin Terminal Housing	34-709-01
	Groundstrap Ass'y.	34-697-04
	Groundstrap Wire Terminal	34-228-03
	Groundstrap Spring (2)	35-3560-01
BR	Support Bracket RH	35-3919-01
BR	Support Bracket LH	35-3919-02
SC	SCREW 10-½ Pix Tube Mtg. (4)	31-631018-08
WA	Pyramidal Lockwasher (4)	33-255-01
	Clip P.C.B. Support (2)	33-629-02
	Ground Lug	34-33-04
CH	Chassis Base	38-452-01

www.basementtrade.com

Main P.C.B. Ass'y (SU-1103A) Parts List

Resistors

Symbol	Description	Part Number
R1406	V R 200Ω	QVZ3230-022
R1408	V R 200Ω	QVZ3230-022
R1410	CMF R 6.8Ω1W J	QRX019J-6R8
R1414	OM R 3.3KΩ1W J	QRG019J-332
R1415	OM R 2.7KΩ1W J	QRG019J-272
R1421	OM R 12KΩ2W J	QRG029J-123
R1422	V R 10KΩ	QVZ3224-014H
⚠FR1401	⚠F R 68Ω2W K	QRH024K-680M
⚠R1503	⚠CMF R 11.8KΩ¼W +1%	QRV142F-1182
R1504	V R 5KΩ	QVZ3230-053
R1509	OM R 10KΩ2W J	QRG029J-103
R1511	OM R 5.6KΩ2W J	QRG029J-562
R1514	OM R 680Ω2W J	QRG029J-681
R1515	CMF R 8.2Ω1W J	QRX019J-8R2
R1522	CMF R 4.7Ω1W J	QRX019J-4R7
R1523	OM R 56Ω2W J	ORG029J-560
R1528	OM R 390Ω1W J	ORG019J-391
R1534	ZN R	ERZ-C05ZK471
VR1501	ZN R	ERZ-C05DK271
⚠R1703	⚠CMF R 39KΩ½W +1%	QRV122F-3902
⚠R1704	⚠CMF R 7.68KΩ¼W +1%	QRV142F-7681
⚠R1901	⚠Posistor	A75414
R1902	UNF R 2Ω7W K	QRF076K-2R0
R1903	CMF R 5.6Ω3W J	QRX039J-5R6
R1904	OM R 10KΩ2W J	QRG026J-103Z
⚠FR1901	⚠F R 220Ω½W K	QRH124K-221M

Capacitors

Symbol	Description	Part Number
C1402	Tan Cap. 2.2uF 16V K	QEE51CK-225B
C1411	E Cap. 100uF 160V A	QEW52CA-107
C1412	E Cap. 3.3uF 160V A	QEW52CA-335
C1508	PP Cap. 5600pF 50V J	QFP31HJ-562
C1511	E Cap. 47uF 160V A	QEW52CA-476S
⚠C1512	⚠PP Cap. 2000pF DC1500V J	QFZ0082-202
⚠C1513	⚠PP Cap. 2000pF DC1500V J	QFZ0082-202
⚠C1514	⚠PP Cap. 2500pF DC1500V J	QFZ0082-252
C1515	PP Cap. 0.53uF DC1200V K	QFZ0067-534
C1520	BPE Cap. 1uF 50V A	QEN61HA-105Z
C1524	M Cap. 0.1uF 200V K	QFM72DK-682M
C1904	E Cap.	QEY0034-001
C1905	E Cap. 10uF 250V A	QEW52EA-106
⚠C1907	⚠MM Cap. 0.1uF AC150V Z	QFZ9008-104

Coils

Symbol	Description	Part Number
L1501	Peaking Coil	A75360-6
L1502	Liniarty Coil	A39934
L1503	Width Coil	C30380-A
L1504	Heater Choke	C30333-A
L1901	Line Filter	A39475-J

Transformers

Symbol	Description	Part Number
T1501	Hor. Drive Transf.	A46022-BM
T1503	Side Pin Transf.	C39050-A

www.basementarcade.com

Semiconductors

Symbol	Description	Part Number
IC1501	I.C.	HA11244
X1101	Si. Transistor	2SC1685(R)
X1102	Si. Transistor	2SA673(C)
X1103	Si. Transistor	2SC1685(R)
X1104	Si. Transistor	2SA673(C)
X1105	Si. Transistor	2SC1685(R)
X1106	Si. Transistor	2SA673(C)
X1301	Si. Transistor	2SC1685(R)
X1302	Si. Transistor	2SC1685(R)
X1303	Si. Transistor	2SA673(C)
X1304	Si. Transistor	2SC1685(R)
X1305	Si. Transistor	2SC1685(R)
X1401	Si. Transistor	2SD478
X1402	Si. Transistor	2SD478
X1501	Si. Transistor	2SC2610BK
X1701	Si. Transistor	2SC1685(P-S)
D1101	Si. Diode	W06A
D1102	Si. Diode	W06A
D1103	Si. Diode	W06A
D1301	Si. Diode	1S2473H
D1401	Si. Diode	1S2473H
D1402	Zener Diode	RD10F(C)
D1503	Si. Diode	HF-1
D1504	Si. Diode	V09E
D1505	Zener Diode	RD11E(B)
D1506	Si. Diode	W06A
D1507	Si. Diode	1SS81
D1508	Si. Diode	1S2473H
⚠D1701	⚠Zener Diode	RD20EV2
⚠D1901	⚠Si. Diode	1S1887A
⚠D1902	⚠Si. Diode	1S1887A
⚠D1903	⚠Si. Diode	1S1887A
⚠D1904	⚠Si. Diode	1S1887A

Miscellaneous

Symbol	Description	Part Number
⚠F1901	⚠Fuse 1A	QMF53U1-1R0S
⚠F1902	⚠UL Fuse 3A	QMF66U1-3R0S

www.baseballarcade.com

CRT Socket P.C.B. Ass'y (SU-3016A) Parts List

Resistors

Symbol	Description	Part Number
R3105	V R 200Ω	QVZ3234-022
R3106	V R 200Ω	QVZ3234-022
R3113	V R 5KΩ	QVZ3234-053
R3114	V R 5KΩ	QVZ3234-053
R3115	V R 5KΩ	QVZ3234-053
R3116	OM R 10KΩ2W J	QRG029J-103
R3117	OM R 10KΩ2W J	QRG029J-103
R3118	OM R 10KΩ2W J	QRG029J-103
R3119	Comp. R 3.3KΩ½W K	QRZ0039-332
R3120	Comp. R 3.3KΩ½W K	QRZ0039-332
R3121	Comp. R 3.3KΩ½W K	QRZ0039-332

Capacitors

Symbol	Description	Part Number
C3107	E Cap. 10uF 250V A	QEW52EA-106
C3108	C Cap. 1000pF DC1400V P	QCZ9001-102M

Coils

Symbol	Description	Part Number
L3101	Peaking coil	QQL043K-101

Semiconductors

Symbol	Description	Part Number
X3101	Si. Transistor	2SC2611
X3102	Si. Transistor	2SC2611
X3103	Si. Transistor	2SC2611

Miscellaneous

Symbol	Description	Part Number
⚠	⚠ CRT Socket	A75522

www.basementarcade.com

ELECTROHOME MONITOR - GENERAL INSTRUCTIONS
Service Set-Up Procedure

NOTE: All monitors are equipped with automatic degaussing coils which effectively demagnetize the picture tube each time the monitor is turned on. The degaussing coils will operate any time the set is turned on after having been off for at least five minutes.

The degaussing effect is confined to the picture tube since the coils are mounted on the ferrous tube shield. Should any part of the chassis or cabinet become magnetized, it will be necessary to degauss the affected area by means of a manual degaussing coil. Move the coil slowly around the CRT face area, then slowly withdraw for a distance of six feet before disconnecting the coil from the AC power supply.

Normally little, if any adjustment should be necessary. However, when a picture tube, yoke or similar component is replaced, preliminary static convergence should be done before attempting purity adjustment, and so on.

Set up should be done in a north/south direction. Horizontal and vertical centering taps should be set to the centre position if a major component has been changed.

1.0 Purity

1.1 Loosen yoke retaining clamp (figure 2), remove adhesive material fixing wedges to CRT. Remove wedges completely and clean off dried adhesive from picture tube and wedges.

1.2 A small quantity of "nail polish" has been used to lock the purity convergence rings in place. This seal must be broken with a sharp tipped instrument before any adjustments are attempted. Some models also use a locking ring at either end of the purity and convergence rings. This must be loosened before adjustments are made. It goes without saying that upon completion of all adjustments, the lock must be reset and/or a dab of paint or nail polish must be re-applied to edge of rings to prevent movement.

1.3 Connect an appropriate signal source, eg: Electrohome RGB generator producting a white field plus individual red, green and blue fields.

1.4 Bring the long and short purity tab protrusions in line with each other to obtain near-zero magnetic field (figure 4) (In some cases bring the flat and indented tabs together to obtain zero field). Protrusions can then be vertical, horizontal or at any convenient angle to start.

1.5 Turn off the green and blue fields and adjust setup controls to produce a red field. (See fig. 3)

1.6 Pull the deflection yoke back so that a red band appears in the centre of the screen.

1.7 Spread the tabs apart as little as necessary and rotate both rings together to center the red band horizontally on the face of the CRT (approximate). (See Fig. 5)

1.8 Slide the yoke towards the bell of the picture tube slowly to obtain a uniform red field (pure in color) across the entire tube face. Juggle back and forth slightly as necessary. Lightly tighten yoke retaining clamp.

1.9 Momentarily switch on a cross-hatch signal and rotate yoke to level the pattern on the face of CRT.

1.10 Return generator to regain red raster.

1.11 Turn off red field and check for pure field for each of the green and blue fields. Reposition yoke if necessary to obtain optimum purity on all fields.

1.12 Tighten yoke retaining clamp to prevent yoke shift or rotation. (Do not install wedges at this time.)

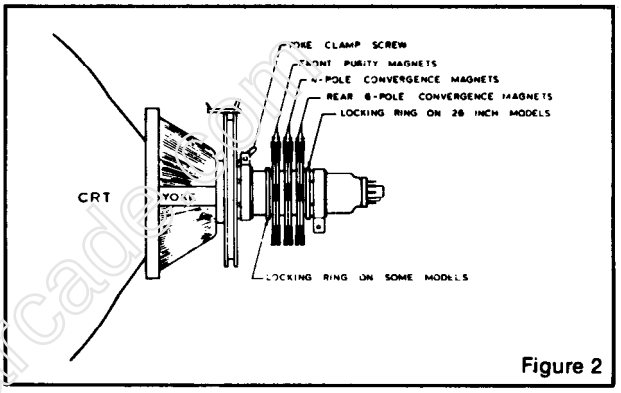

Figure 2

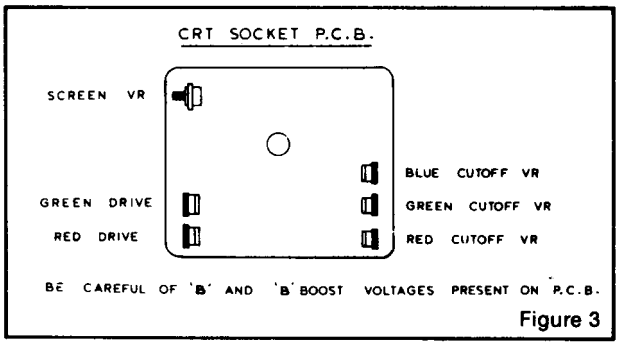

Figure 3

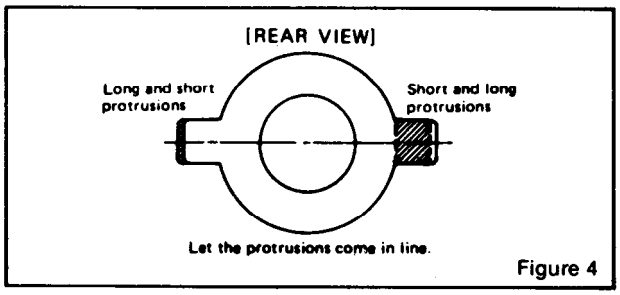

Figure 4

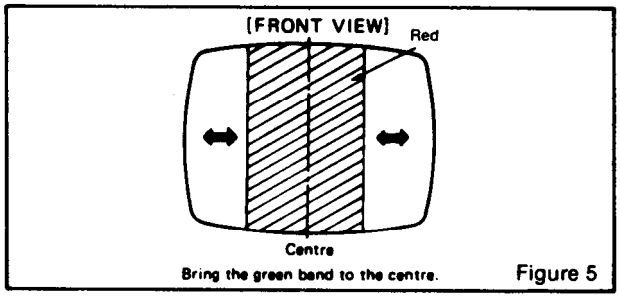

Figure 5

2.0 Static and Dynamic Convergence

NOTE: Static convergence is achieved by four magnets located on the neck, nearest the base of the picture tube, Fig. 2. The middle pair of magnetic rings are adjusted to converge the blue and red crosshatch lines. The rear pair of convergence rings (closest to the base of the picture tube) are adjusted to converge the magenta (blue/red) to the green crosshatch lines. Dynamic convergence is achieved by tilting the deflection yoke up-down and left-right.

2.1 Ensure that the controls misadjusted during purity setup (screen, cut-off, etc.) are set to give white balance. See 3.0 below.

2.2 Switch generator to the crosshatch pattern.

2.3 Adjust convergence around the edges of the picture tube by tilting the yoke up-down and left-right, and temporarily install one wedge at the top of the yoke or in a more optimum position. (Figures 8, 9, 10)

2.4 Turn off green input and turn on the red and blue input.

2.5 Rotate the 4-pole (middle) pair of magnets as a unit to minimize separation of the red and blue crosshatch lines around the center of the screen (Figure 6). Variation of the angle between the tabs adjusts convergence of red and blue. (Tilt yoke as required to converge red and blue at the edges as in 2.3 above.)

2.6 Turn on green input to obtain magenta (red/blue) and green crosshatch lines. Rotate the 6-pole (rear) pair of magnets as a unit to minimize separation of the magenta and green lines (figure 7). Vary angle between the two tabs and further rotate as a unit to finalize.

2.7 When converence of 3 colors is optimized (static in center and dynamic around edges) apply stripe of paint or nail polish to converence magnet rings to prevent movement. If applicable, tighten locking ring carefully.

2.8 Remove temporary wedge from yoke. Tilt yoke in up-down and left-right direction for best circumference convergence and install 3 wedges. (It is best to use 3 new wedges since they have adhesive backing. Simply pull off tape, slide wedge in place and press outer flap down firmly. For more permanency apply small quantity of silastic or similar material at junction of wedges and picture tube. Do not disturb while material is setting. (Order wedges by part number 39-1233-01).

3.0 White Balance (Grey Scale Tracking)

Refer to figure 3. Do the following in subdued light:

3.1 Note this adjustment can be accomplished with no signal connected; eg: input connector open or if a signal generator is connected, switch off all 3 inputs at the generator.

3.2 Set red and green drive controls to their mechanical center and turn the common G2 screen control and 3 cut-off controls to minimum (fully counterclockwise).

3.3 Slowly turn up G2 screen control until the first faint color appears, then back off to edge of visibility. Do not touch the associated cut-off control - it should stay fully CCW for the remaining set-up.

3.4 Slowly turn up the other two color cut-off controls in turn to match the first. This should result in the faintest grey.

3.5 Turn on the signal generator with all 3 inputs on. (a crosshatch pattern would be appropriate).

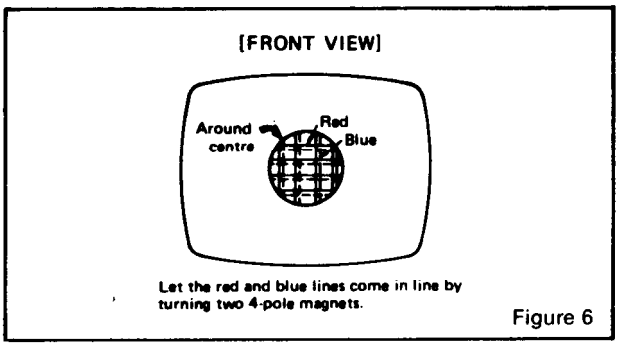

Let the red and blue lines come in line by turning two 4-pole magnets.

Figure 6

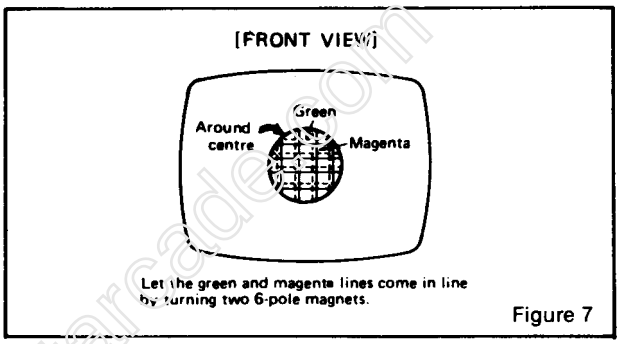

Let the green and magenta lines come in line by turning two 6-pole magnets.

Figure 7

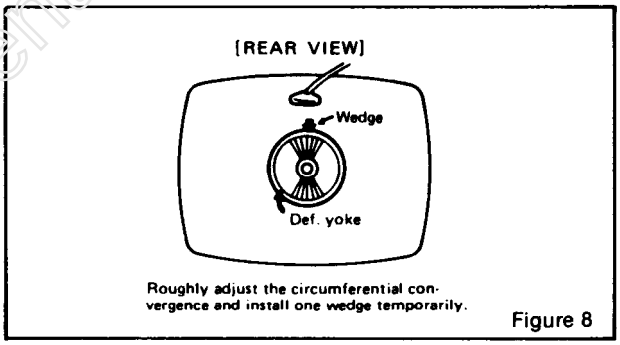

Roughly adjust the circumferential convergence and install one wedge temporarily.

Figure 8

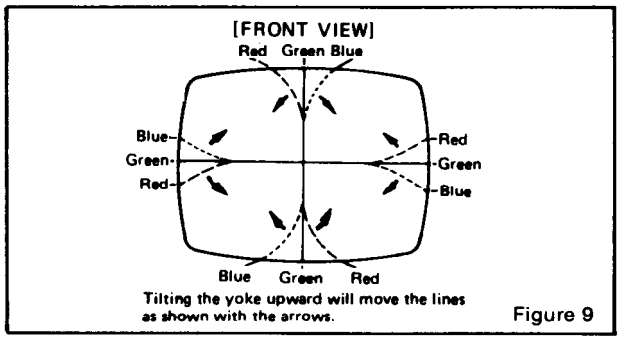

Tilting the yoke upward will move the lines as shown with the arrows.

Figure 9

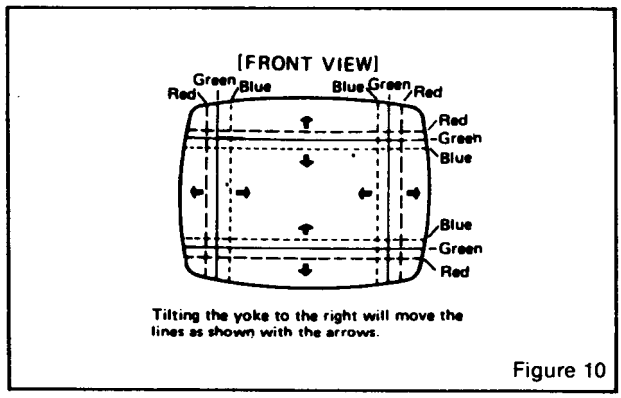

Tilting the yoke to the right will move the lines as shown with the arrows.

Figure 10

www.classicentarcade.com

3.6 Adjust the red and green drive controls for "neutral white" on high white picture areas. Generally these controls will be left at mech. centre.

3.7 Note: When monitor is re-connected with the game the screen control (G2) may require a slight adjustment to obtain proper black level. (the black portion of picture just extinguished).

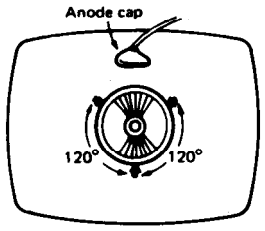

Figure 11

4.0 Power Supply

The regulated +B1 control (R909) has been factory adjusted and normally requires no adjustment. However, if any repairs have been made to the chassis it is recommended that this adjustment should be made.

a) Allow 5 minutes to warm up.
b) No signal applied.
c) Connect an accurate D.C. voltmeter to TP-91 or the emitter of X04 power regulator transistor.
d) Adjust R909 for 120V. (See fig. 1)

Note:
Should +B1 control be set too high, it may cause possible component damage. Use an accurate D.C. voltmeter to set B1 (B+).

5.0 Focus

Adjust focus control for best overall definition and picture detail an average signal applied. (Highlights should be favoured.)

6.0 Color Service Generator for G07 Monitor

Electrohome has developed a color service generator that is specifically designed for use with the G07 color data monitor. It provides the monitor with both horizontal and vertical sync, as well as the following test patterns:

1) Fine cross-hatch pattern
2) Broad bar cross-hatch pattern
3) Complete field

Three color selection switches, red, green and blue, provide the ability to display the above patterns in the three primary colors as well as the three secondary colors.

This product may be ordered from:
Contracts Marketing
ELECTROHOME Electronics
809 Wellington St. North
Kitchener, Ontario
Canada N2G 4J6
Telephone: (519) 744-7111, Ext. 567

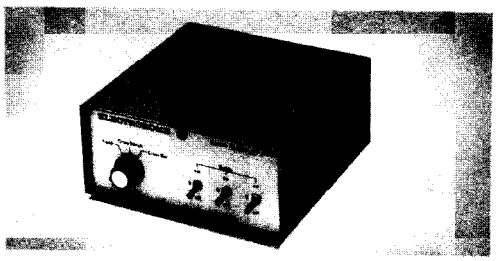

7.0 X-Ray Emission Check

7.1 Assure the power supply B1 is properly adjusted to 120V DC. See Item 4.0 (page 8)

7.2 Assure that the anode voltage does not exceed max. as per Item 2.0 page 4.

7.3 Assure that the high voltage hold down circuit is operating correctly. Use the following procedure.

a) Increase the B1 greater than 138.5V by shorting collector/emitter of the power regulator, X04.

b) Observe that the anode voltage (EHT) goes to 0. If the EHT does not go to 0, a fault must be located and repaired.

c) Remove short and set should return to normal operation. (Note, after the short is removed some monitors may not restart. In this case, remove power from monitor momentarily and normal operation will be restored.

Note:
The protector circuit consists of the components shown below in Fig. 13 with a circuit description.

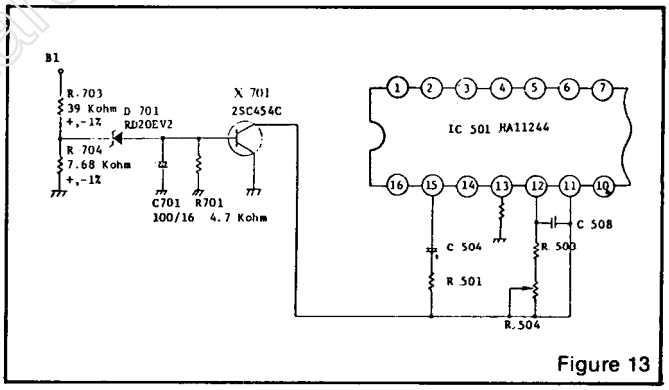

Figure 13

8.0 Circuit Diagram and Description of High Voltage Hold Down or Safety Circuit

8.1 Circuit Diagram of High Voltage Hold Down Circuit.

8.2 Operation of High Voltage Hold Down Circuit.

The high voltage hold-down circuit protects the high voltage circuit from dangerous voltage with short circuiting between emitter and collector of power regulating transistor.

The base voltage of X701 is increased when the B1 voltage is increased more than 138.5 V DC.

When the base of X701 is increased, a short is produced by X701 between pin 11 and ground of IC 501, shutting down the horizontal osc. and high voltage.

www.basementarcade.com

WARNING: THIS EQUIPMENT GENERATES, USES, AND CAN RADIATE RADIO FREQUENCY ENERGY AND IF NOT INSTALLED AND USED IN ACCORDANCE WITH THE INSTRUCTIONS MANUAL, MAY CAUSE INTERFERENCE TO RADIO COMMUNICATIONS. AS TEMPORARILY PERMITTED BY REGULATION IT HAS NOT BEEN TESTED FOR COMPLIANCE TO SUBPART J OR PART 15 OF FCC RULES, WHICH ARE DESIGNED TO PROVIDE REASONABLE PROTECTION AGAINST SUCH INTERFERENCE. OPERATION OF THIS EQUIPMENT IN A RESIDENTIAL AREA IS LIKELY TO CAUSE INTERFERENCE IN WHICH CASE THE USER AT HIS OWN EXPENSE WILL BE REQUIRED TO TAKE WHATEVER MEASURES MAY BE REQUIRED TO CORRECT THE INTERFERENCE.

M051-00095-0000

www.baseradio.com