Thank You for downloading this manual. I hope it helps you resolve any issues you have had with your game.

This manual was purchased, and scanned by Basement Arcade Associates, www.basementarcade.com and is offered for free download at our site.

This PDF is not to be distributed on any collection CD / DVD, nor is to be linked to via any other internet site without permission from us. Likewise it is not to be distributed from any other site without our permission.

Abiding by these requests, will insure the continuing support of new manuals added to our site.

All original copyrights held by their original owners, This PDF copyrighted Basement Arcade Associates.

-=Mark=-

www.basementarcade.com

ASTRO FIGHTER

www.basementarcade.com

Gremlin®/SEGA®

MANUAL PART NO. 420·0410
or
420·0411

OWNER'S MANUAL

ASTRO FIGHTER

OPERATING INSTRUCTIONS

AND

SERVICE MANUAL

www.basementarcade.com

Copyright © 1980 by GREMLIN INDUSTRIES, INC. All rights reserved.

OPTIONS SELECT AND SOUND CONTROL ADJUSTMENTS

DIP Switch No.

1	Not Used	
2	ON	BONUS awarded for each row eliminated
	OFF	BONUS awarded after formation eliminated
3	ON	No Replay
	OFF	Replay

4	OFF	ON	OFF	ON
5	OFF	OFF	ON	ON
		1COIN·1PLAY	2COIN·1PLAY	1COIN·2PLAY

6	OFF	OFF	ON	ON
7	OFF	ON	OFF	ON
	9 JUMP	7 JUMP	5 JUMP	3 JUMP

8	On	Upright or Mini-Video model
	OFF	Cocktail or Slimline model

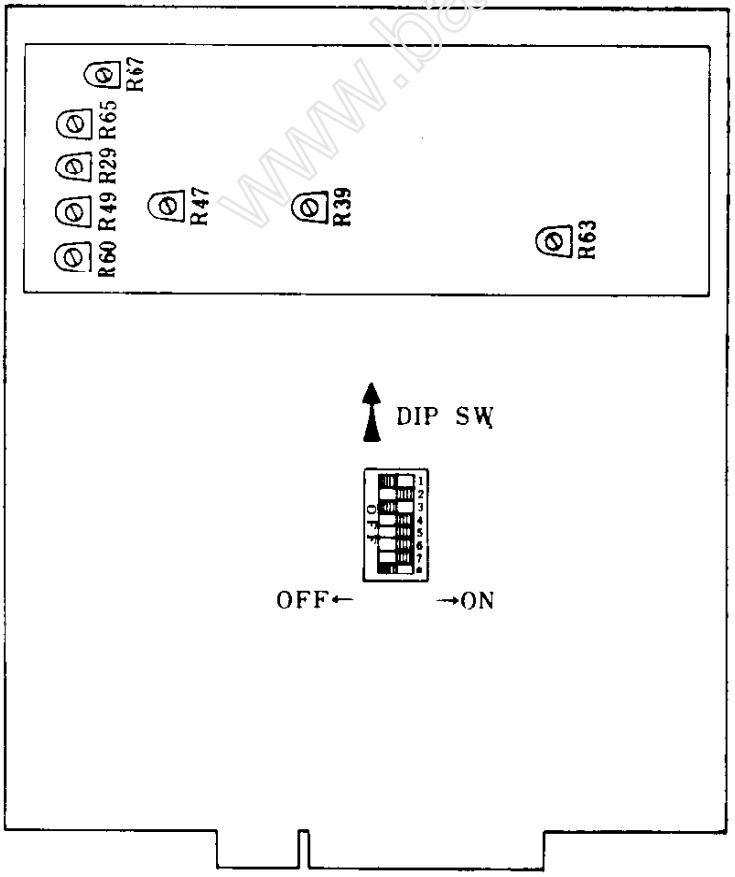

SOUND ADJUSTMENTS

R29	Explosion Sound
R39	Firing Sound
R49	Master's Dying Sound
R60	Firing Decay
R63	Music Sound
R65	High Pitch Tone Control
R67	Main Volume Control
R47	Factory Adjusted...Do Not Set

www.basementarcade.com

REPACKAGING INSTRUCTIONS...

Arcade
25¼" W x 67" H x 28" D
64.77cm W x 170.18cm H x 71.12cm D
280 lbs./132 kg.

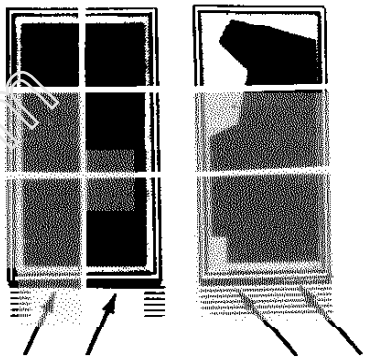

Arcade Version

1. Carefully lay game on its side.
2. Attach pallet with **four** 5/16" - 18 × 1-3/4" bolts, as shown.
3. See Final Recrating Instructions, below.

MiniVideo
22" H x 21" W x 28" D
55.88cm H x 53.34cm W x 50.8cm D
60 lbs./70 kg.

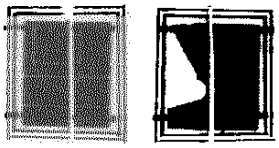

Mini-Video Version

1. Place game upright inside bottom cover.
2. Slide cover over game. Add protective packing material.
3. Place top cover over side cover.
4. See Final Recrating Instructions, below.

Cocktail
22" W x 34" L x 24½" H
55.88cm W x 86.36cm L x 62.23cm H
80 lb./36 kg.

Cocktail Version

1. Place game inside carton.
2. Add protective packing material.
3. Place inside protective top cover over unit.
4. Close flaps and secure with shipping tape.
5. See Final Recrating Instructions, below.

FINAL RECRATING INSTRUCTIONS...

Place game upright. Tape down game keys. Then, crate the game using appropriate shock-absorbent packing material. Include packing on edges of game. **Secure package with strapping.**

Note ... If the game is to be shipped to Gremlin Industries for service or repair, attach a tag identifying the distributor and indicate the service or repair to be done. Include the full serial number of the game.

All items must be shipped prepaid.

www.bestamentarcade.com

GAME CONCEPT...

ASTRO FIGHTER is a 1 or 2 player game of space adventure. Two players may take turns, competing for high score. The player's warship faces meteor showers and four lines of enemy defense forces in an effort to reach THE MASTER and destroy it. Besides the challenges to fighting ability, the player's warship has an expendable supply of fuel that must last through the fight with THE MASTER. Two player controls are provided: a joystick enables the player to maneuver his warship from side to side; and a missile firing button.

The play begins with your warship at the bottom of the screen facing a barrage of yellow meteors that will destroy your warship, if hit. All action appears from the top of the screen and descends to the bottom throughout the game.

You are given a full supply of fuel in the beginning of play. This supply will steadily be consumed as you play and you must defeat THE MASTER before you can refuel. You will want to watch this gauge carefully throughout the game; a blue line will show your present fuel condition at all times.

After the initial meteor shower, you will face 11 enemy warships. They will appear in a pyramid formation with the wide row emerging from the top of the screen first. The enemy will move from side to side and is capable of firing not only straight ahead, but to its left and right. As you destroy the enemy ships, the action of the remainder is intensified.

If an enemy warship gets past you and reaches the bottom of the screen, regardless of how many previous warships, or formations, you have destroyed, the original group of defenders will reappear and your warship will be advanced one step closer to the enemy. Essentially, you will begin again, only closer, and you will have used precious fuel in the meantime.

After you have conquered the first formation of enemy warships, you will face a new formation of 12 warships, staggered six across and two deep.

www.basementarcade.com

After defeating the second formation, you will face a force of 12 warships that are not in a formation, but are randomly scattered in front of you.

Following the victory of having blasted away the third line of defenses, you will now face 15 enemy warships, five across and three deep, in your efforts to reach THE MASTER and defeat it. The vertical columns of this defense force will be varied in their distance to your warship.

If you suceed in defeating all 15 of the enemy warships, you are now ready to meet, and destroy, THE MASTER.

A pattern will emerge on the screen resembling a corridor that your warship is traveling along. The stars will become brighter and THE MASTER will appear. THE MASTER's body will expand and contract as it moves across the screen, back and forth, while firing vicious missiles at you. THE MASTER's missiles are random and may be fired in any direction.

THE MASTER can only be defeated by a direct hit in the eye. This is the only way you can destroy THE MASTER.

When you have destroyed THE MASTER, a fuel pipe will link-up with your warship and your supply will, again, be full. You are now ready for more combat in your efforts to,once again, seek and destroy THE MASTER. But, beware...the meteor showers and enemy action are now intensified and your challenge is more difficult.

Throughout the play, a watchful eye must be kept on your fuel guage. If your supply is exhausted at any time before you destroy THE MASTER...your warship will explode!

Player 1 and player 2 scores are displayed at the top of the screen and the high score from past games will be displayed.

The operator may select the number of credits per coin. In addition, the operator may enable the one-player, or two-player switch, located inside the unit.

www.basementarcade.com

OPTIONS SELECT AND SOUND CONTROL ADJUSTMENTS

DIP Switch No.

1	Not Used	
2	ON	BONUS awarded for each row eliminated
	OFF	BONUS awarded after formation eliminated
3	ON	No Replay
	OFF	Replay

4	OFF	ON	OFF	ON
5	OFF	OFF	ON	ON
		1COIN·1PLAY	2COIN·1PLAY	1COIN·2PLAY

6	OFF	OFF	ON	ON
7	OFF	ON	OFF	ON
	9 JUMP	7 JUMP	5 JUMP	3 JUMP

8	On	Upright or Mini-Video model
	OFF	Cocktail or Slimline model

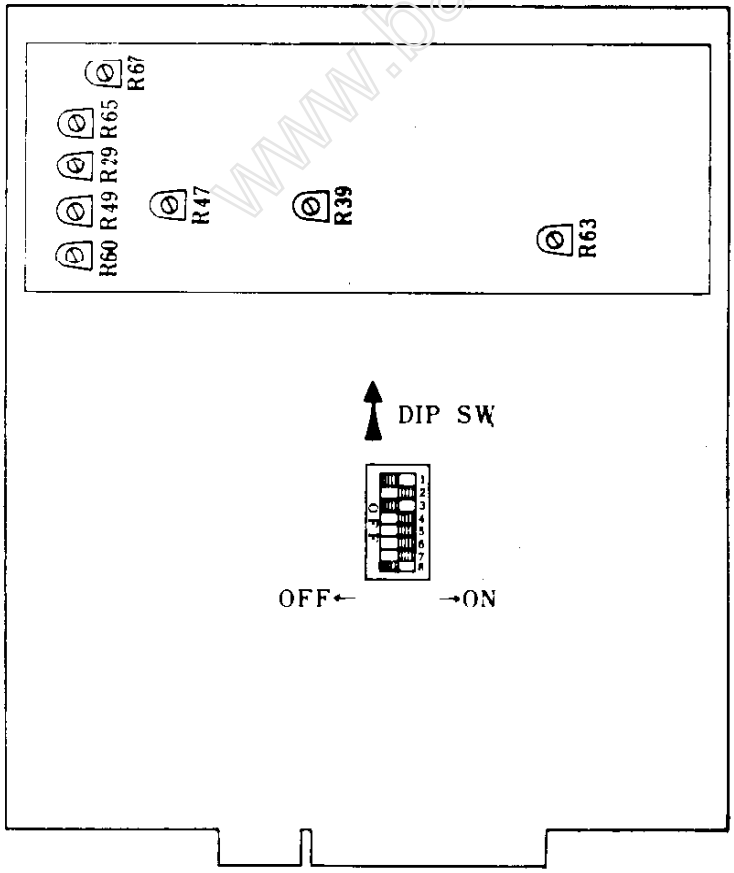

SOUND ADJUSTMENTS

R29	Explosion Sound
R39	Firing Sound
R49	Master's Dying Sound
R60	Firing Decay
R63	Music Sound
R65	High Pitch Tone Control
R67	Main Volume Control
R47	Factory Adjusted...Do Not Set

www.basementarcade.com

Gremlin Industries, Inc. San Diego, California 92123	PARTS LIST	TITLE ASSY HARNESS MASTER A F	800-3010 DWG NO	SH 1 OF 3	A REV
		DRAWN MAHONEY	ENGR		
		CHECK Glenn P. Foy	APPR		

LTR	DATE	REVISION DESCRIPTION	DRAFT	CHECK	APPR
A	2-6-80	RELEASED 2-8-80	J.M.	GPF	GPF

www.basementarcade.com

Gremlin Industries, Inc. San Diego, California 92123	PARTS LIST	TITLE ASSY HARNESS MASTER A F	800-3010 DWG NO	SH 2 OF 3	A REV

ITEM NO	PART NO	QTY PER ASSY					DESCRIPTION	REF DES
1		REF					MAIN HARNESS ASSY	
2	211-0050	1					CONN CARD EDGE 44 PIN AMP	P1
3	212-0005	1					CONN FEM BLK 4 PIN	J1
4	211-0005	7					CONN CRIMP LOCK	
5	212-0033	1					CONN FEM 8 PIN	J4
6								
7	211-0001	19					CONN CRIMP COIN BOX	J2, J3
8	280-0005	41					CABLE TIES	
9	600-0013	7FT.					CA 1 COND SHIELDED	
10	211-0017	6					CONN FEM QUICK 1/4"	J5

www.thegameoldarcade.com

Gremlin Industries, Inc. San Diego, California 92123	PARTS LIST	TITLE TOP ASSEMBLY ASTROFIGHTER ENG WHT	700-0005 DWG NO	SH 1 OF 5	A REV
USE WITH 800-3001 FOR PARTS LOCATIONS		DRAWN Ron Hawthree	ENGR		
		CHECK Steven P Fay	APPR		

LTR	DATE	REVISION DESCRIPTION	DRAFT	CHECK	APPR
A	2-11-80	RELEASED 2-8-80		SPF.	SPF.
		REFER TO HEXAGON CALL-OUT ON SHEETS 3 AND 4 FOR			
		LOCATION OF PARTS LISTED HERE.	RHawthree		

FORM NO 001-1500

www.basementarcade.com

Gremlin Industries, Inc. San Diego, California 92123	PARTS LIST	TITLE TOP ASSEMBLY ASTRO FIGHTER ENG WHT	700-0005 DWG NO	SH 2 OF 5	A REV

ITEM NO	PART NO	QTY PER ASSY					DESCRIPTION	REF DES
1	800-3007	1					ASS'Y. BASIC KIT A/F	
2	140-0033	1					CABINET, DIRECT. WHT	
3	834-0000	1					ASS'Y. GAME ELECTRONICS (SEGA)	
4	420-0394	1					GRAPHIC. SIDE. RIGHT	
5	420-0393	1					GRAPHIC. SIDE. LEFT	

www.basementarcade.com

Gremlin Industries, Inc. San Diego, California 92123	PARTS LIST	TITLE TOP ASSEMBLY ASTROFIGHTER, ENG WG	700-0006 DWG NO	SH 1 OF 2	A REV
USE WITH 700-0005 FOR FINAL ASSEMBLY		DRAWN Ron Hawthorne	ENGR		
		CHECK Steven J Fay	APPR		

LTR	DATE	REVISION DESCRIPTION	DRAFT	CHECK	APPR
A	2-11-80	RELEASED 2-8-80	KAL	SJF	SJF
		REFER TO HEXAGON CALL-OUTS ON 700-0005 FOR			
		LOCATION OF PARTS LISTED HERE.	RHawthorne		

www.basementarcade.com

Gremlin Industries, Inc. San Diego, California 92123	PARTS LIST	TITLE TOP ASSEMBLY ASTROFIGHTER ENG WG	700-0006 DWG NO	SH 2 OF 2	A REV

ITEM NO	PART NO	QTY PER ASSY				DESCRIPTION	REF DES
1	800-3007	1				ASS'Y. BASIC KIT A/F	
2	140-0040	1				CABINET. DIRECT WOODGRAIN	
3	834-0000	1				ASS'Y. GAME ELECTRONICS (SEGA)	
4							
5							

www.basementarcade.com

Gremlin Industries, Inc. San Diego, California 92123	PARTS LIST	TITLE ASSEMBLY CONTROL PNL ASTRO FIGHTER	800-3009 DWG NO	SH 1 OF 3	A REV
SHEET 3 IS "D" SIZE		DRAWN MAHONEY	ENGR		
		CHECK Steve P. Fay	APPR		

LTR	DATE	REVISION DESCRIPTION	DRAFT	CHECK	APPR
A	2-8-80	RELEASED 2-8-80	J.M.	SPF.	SPF.

www.basementarcade.com

Gremlin Industries, Inc. San Diego, California 92123	PARTS LIST	TITLE ASS'Y. CONTROL PANEL ASTRO FIGHTER	800-3009 DWG NO	SH 2 OF 3	B REV

ITEM NO	PART NO	QTY PER ASSY					DESCRIPTION	REF DES
1	253-0137	1					CONTROL PANEL GRAPHIC	
2	253-0031	10					SPACER, WICO SWITCH	
3	250-0366	1					SUB-PANEL METAL	
4								
5	240-0006	1					BUTTON PLUNGER RED	
6	240-0007	2					BUTTON PLUNGER BLACK	
7	240-0009	2					BUTTON PLUNGER YELLOW	
8	800-0026	1					ASSY GROUND STRAP	
9	510-0023	5					ASS'Y SWITCH WICO	
10		1					BOLT, CARRIAGE (BLK) 10-24 × 2 IN.	
11		1					NUT, HEX 10-24 #10	
12								

www.classicarcade.com

Gremlin Industries, Inc. San Diego, California 92123	PARTS LIST	TITLE ASSY-GAME ASTRO FIGHTER COCKTAIL (ENGLISH)	700-0007 DWG NO	SH 1 OF 5	A REV
SHT 4,5 ARE "D" SIZE		DRAWN Wyncma 2-12-80	ENGR		
		CHECK Scott Cameron 2-1980	APPR		

LTR	DATE	REVISION DESCRIPTION	DRAFT	CHECK	APPR
A	2-19-80	RELEASED	WJB		

www.basementarcade.com

Gremlin Industries, Inc. San Diego, California 92123	PARTS LIST	TITLE ASSY-GAME ASTRO FIGHTER COCKTAIL (ENGLISH)	700-0007 DWG NO	SH 2 OF 5	A REV

ITEM NO	PART NO	QTY PER ASSY					DESCRIPTION	REF DES
1	253-0141	2					GHAPHIC CONT PANEL	
2	253-0142	1					GHAPHIC GAME SELECT	
3	280-0075	6					NUT WIRE LG	
4	420-0370	1					DECAL COIN ENTRY	
5	420-0371	1					DECAL COIN INFO	
6	420-0404	2					TABLE GHAPHIC	
7	420-0411						MANUAL ASTRO FIGHTER	(COCKTAIL)
8	478-0001	1					THERMISTER	
9	560-0046	1					ISOLATION XFMR	
10	800-0072	1					ASSY POWER SUPPLY	
11	800-3022	1					ASSY MASTER HARNESS	
12	800-3023	1					ASSY POWER HARNESS	
13	800-3024	1					ASSY HARN VOL CONT	
14	800-3026	1					ASSY FUSE BLOCK	
15	800-3027	1					ASSY GROUND STRAP	
16	800-3028	1					ASSY EMI HARN	
17	807-0010	1					ASSY HARNESS SPEAKER	
18	834-0010	1					ASSY SPECIAL DUAL JAPAN	
19	834-5000	1					ASSY GAME ELECTRONICS	(SEGA)
20	600-0001	1					CORD, LINE, 3COND	
21		8					SCREW PHL. PN. HD. 6×1/2 SH. MTL	
22		6					SCREW PHL. PN. HD. 8×1/2 SH. MTL	

www.classicarcadecontrols.com

Gremlin Industries, Inc. San Diego, California 92123	PARTS LIST	TITLE ASSY GAME ASTRO FIGHTER COCKTAIL (ENGLISH)	700-0007 DWG NO	SH 3 OF 5	A REV

ITEM NO	PART NO	QTY PER ASSY					DESCRIPTION	REF DES
23		6					WASHER, FLAT #8	
24	250-0391	1					BRACKET, PWR. SUP. LOCKING	
25	250-0048	1					CLIP SWITCH	
26	800-3031	1					ASSY VOL. CONT. BLOCK	

www.basementarcade.com

Gremlin Industries, Inc. San Diego, California 92123	PARTS LIST	TITLE TOP ASSY GAME, ASTRO FIGHTER SLIMLINE	700-0008 DWG NO	SH 1 OF 6	A REV
SHTS. 4-6 ARE "D" SIZE		DRAWN MAHONEY	ENGR		
		CHECK [illegible]	APPR		

LTR	DATE	REVISION DESCRIPTION	DRAFT	CHECK	APPR
A	3-3-80	RELEASED	J.M.	[illegible]	[illegible]

www.basementarcade.com

FORM NO. 001-1500

Gremlin Industries, Inc. San Diego, California 92123	PARTS LIST	TITLE TOP ASSY GAME, ASTRO FIGHTER SLIMLINE	700-0008 DWG NO	SH 2 OF 6	A REV

ITEM NO	PART NO	QTY PER ASSY					DESCRIPTION	REF DES
1	800-3026	1					ASSY FUSE BLOCK	
2	834-5000	1					ASSY GAME ELECTRONICS	
3	560-0046	1					ISOLATION XFMR	
4	800-3031						ASSY VOL CONT BLOCK	
5	250-0048	1					CLIP SWITCH	
6	800-0072	1					ASSY PWR SUPPLY DUAL	
7	478-0001	1					THERMISTOR	
8	253-0150	2					CONTROL PANEL GRAPHIC	
9	834-0013	1					SLIMLINE CABINET (NO ELECT)	
10	253-0151	1					GRAPHIC COIN INFO	
11	420-0421	2					TABLE GRAPHIC	
12	253-0149	1					GRAPHIC GAME SELECT	
13	252-0078	1					SUPPORT BLOCK REAR A/F UPRIGHT	
14	252-0079	1					SUPPORT BLOCK FRONT A/F UPRIGHT	
15	140-0047	1					GAME BASE, SLIMLINE	
16	252-0081	2					MTG. BLOCK	
17	252-0082	2					BLK STNDFF ISOLATION XFMR	
18	252-0083	3					PWR SUPPLY MTG. BLOCK	
19	280-0004	12					CLIP, WIRE HOLD DOWN	
20		4					#6 x 1/2" PAN HD SHT. MTL. SCREW	
21		6					#8 x 1" FLAT HD. WOOD SCREW	
22		7					#8 x 1" PAN HD. SHT. MTL. SCREW	
23		3					#10 x 1 3/4" FLT. HD. WOOD SCREW	
24		2					#10 x 1/2" PAN HD. SHT. MTL. SCREW	
25		4					#8 FLAT WASHER	

www.classicgameman.com

Gremlin Industries, Inc. San Diego, California 92123	PARTS LIST	TITLE TOP ASSY GAME, ASTRO FIGHTER SLIMLINE	700-0008 DWG NO	SH 3 OF 6	A REV

ITEM NO	PART NO	QTY PER ASSY					DESCRIPTION	REF DES
26		4					#10 x 2" FLT HD WOOD SCREW	
27	800-3022	1					ASSY MASTER HARN	
28	800-3023	1					ASSY POWER HARN	
29	800-3024	1					ASSY HARN VOL CONTROL	
30	807-0010	1					ASSY HARN SPEAKER	
31	600-0001	1					CORD, LINE 3-COND	
32	800-3032	1					ASSY GROUND STRAP	
33	420-0424	1					MANUAL A/F SLIMLINE	

www.videogamemuseumarcade.com

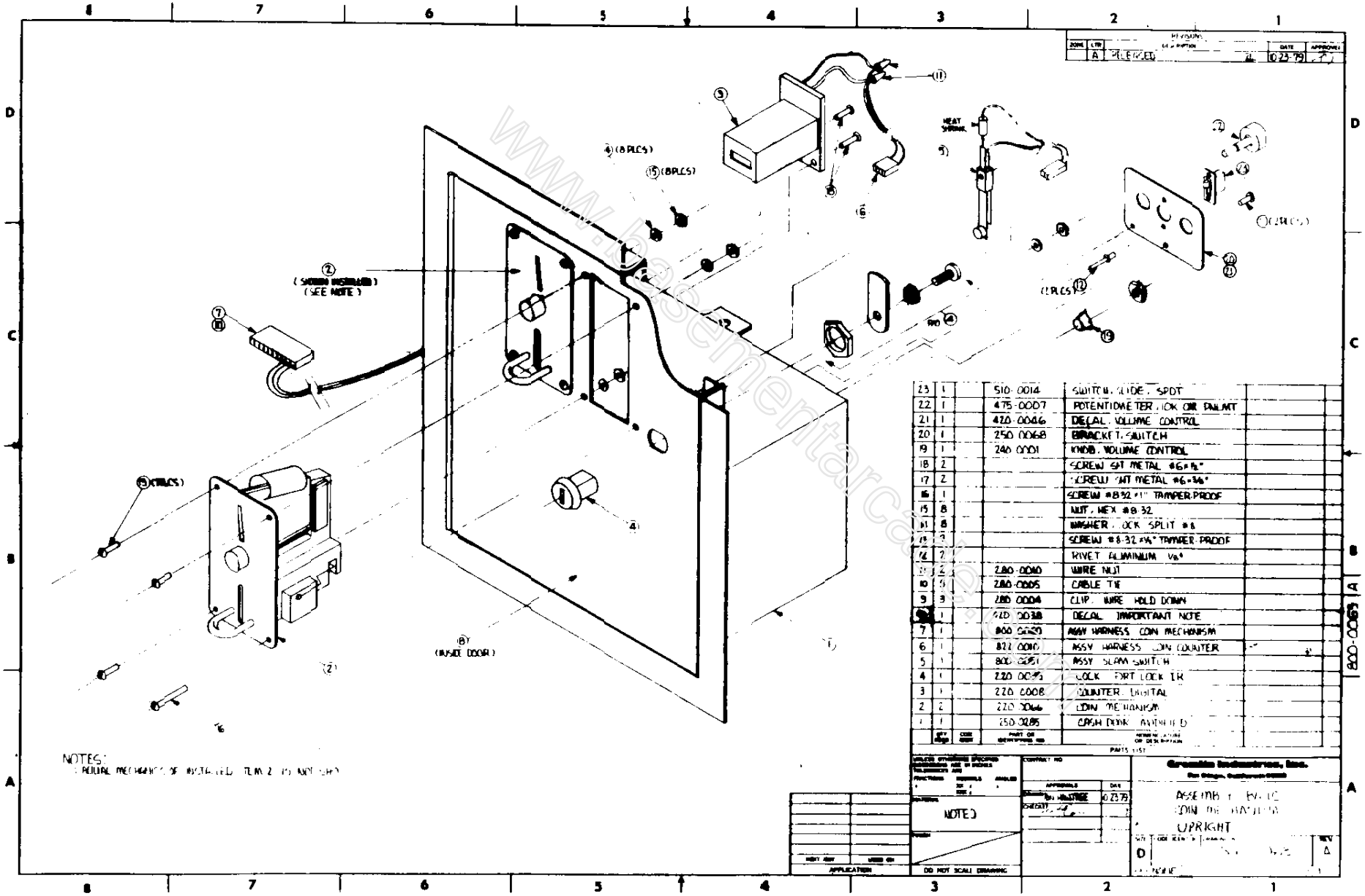

23	1		510-0014	SWITCH, SLIDE, SPDT	
22	1		475-0007	POTENTIOMETER, 10K OHM PANLMT	
21	1		420-0046	DECAL, VOLUME CONTROL	
20	1		250-0068	BRACKET, SWITCH	
19	1		240-0001	KNOB, VOLUME CONTROL	
18	2			SCREW SHT METAL #6×½"	
17	2			SCREW SHT METAL #6×3/8"	
16	1			SCREW #8-32×1" TAMPER PROOF	
15	8			NUT, HEX #8-32	
14	8			WASHER, LOCK SPLIT #8	
13	3			SCREW #8-32×¼" TAMPER PROOF	
12	2			RIVET ALUMINUM 1/8"	
11	2		280-0010	WIRE NUT	
10	5		280-0005	CABLE TIE	
9	3		280-0004	CLIP, WIRE HOLD DOWN	
8	1		420-0038	DECAL, IMPORTANT NOTE	
7	1		800-0020	ASSY HARNESS COIN MECHANISM	
6	1		822-0010	ASSY HARNESS COIN COUNTER	
5	1		800-0051	ASSY SLAM SWITCH	
4	1		220-0095	LOCK FORT LOCK IR	
3	1		220-0008	COUNTER, DIGITAL	
2	2		220-0066	COIN MECHANISM	
1	1		250-0085	CASH DOOR ASSEMBLED	
	QTY REQD	CODE IDENT	PART OR IDENTIFYING NO	NOMENCLATURE OR DESCRIPTION	

PARTS LIST

NOTED

DO NOT SCALE DRAWING

APPLICATION

Granville Industries, Inc.

ASSEMBLY BV-1C
COIN OPERATION
UPRIGHT

D

800-0065 A

www.basementarcade.com

REVISIONS				
ZONE	LTR	DESCRIPTION	DATE	APPROVED
	A	RELEASED	2-8-80	

NOTES:

1. SECURE HARNESS USING ITEM 6, APPROX EVERY 6 INCHES.

WIRE	FROM	TO	COLOR	INCH
47	J5 - 5	J5 - 6	JUMPER	10
46	J2 - 4	J1 - 1	SHLD. CA. GND	42
45	J2 - 5	J1 - 4	SHLD. CA. WHT	42
44	P1 - 22			
43	P1 - 21			
42	P1 - 20			
41	P1 - 19			
40	P1 - 18	J2 - 9	WHT / VIO	60
39	P1 - 17			
38	P1 - 16			
37	P1 - 15			
36	P1 - 14			
35	P1 - 13			
34	P1 - 12			
33	P1 - 11			
32	P1 - 10			
31	P1 - 9	J2 - 5	WHT/BLU	60
30	P1 - 8	J5 - 3	WHT/GRN	60
29	P1 - 7	J2 - 4	SHLD.CA.GND	42
28	P1 - 6	J4 - 8	BLK	20
27	P1 - 5	J4 - 5	BLU	20
26	P1 - 4	J4 - 1	RED	20
25	P1 - 3			
24	P1 - 2			
23	P1 - 1	J2-1,2 / J5-4	BLK	60
22	P1 - Z	J6 - 2	WHT / YEL	47
21	P1 - Y	J6 - 1	WHT/ORN	47
20	P1 - X			
19	P1 - W			
18	P1 - V	J2 - 6	WHT/RED	60
17	P1 - U	P1 - R	JUMPER	2
16	P1 - T	P1 - P	JUMPER	2
15	P1 - S	P1 - N	JUMPER	2
14	P1 - R	J3 - 10	WHT / BRN	65
13	P1 - P	J3 - 9	WHT/BLK	58
12	P1 - N	J3 - 8	GRY	59
11	P1 - M	J3 - 7	VIO	66
10	P1 - L	J3 - 6	YEL	61
9	P1 - K	J2 - 7	ORN	60
8	P1 - J	J5 - 1,2	BRN	60
7	P1 - H	J2 - 3	SHLD. CA. WHT	42
6	P1 - F	J4 - 7	WHT	20
5	P1 - E	J4 - 3	GRN	20
4	P1 - D			
3	P1 - C			
2	P1 - B			
1	P1 - A	J3-1,2,3,4,5	BLK	62

WIRE LIST

NO.	NOMENCLATURE OR DESCRIPTION

PARTS LIST

TRACT NO.

APPROVALS	DATE
WN MAHONEY	2-6-80
CKED	2-8-80

Gremlin Industries, Inc.
San Diego, California 92123

ASSY HARNESS
MASTER AF

SIZE	CODE IDENT NO.	DRAWING NO.	REV.
D		800 - 3010	A

SCALE NONE | SHEET 3 OF 3

800-3010 A

www.basementtapes.com

NOTES:

1. SECURE HARNESS USING ITEM 8, APPROX EVERY 6 INCHES.

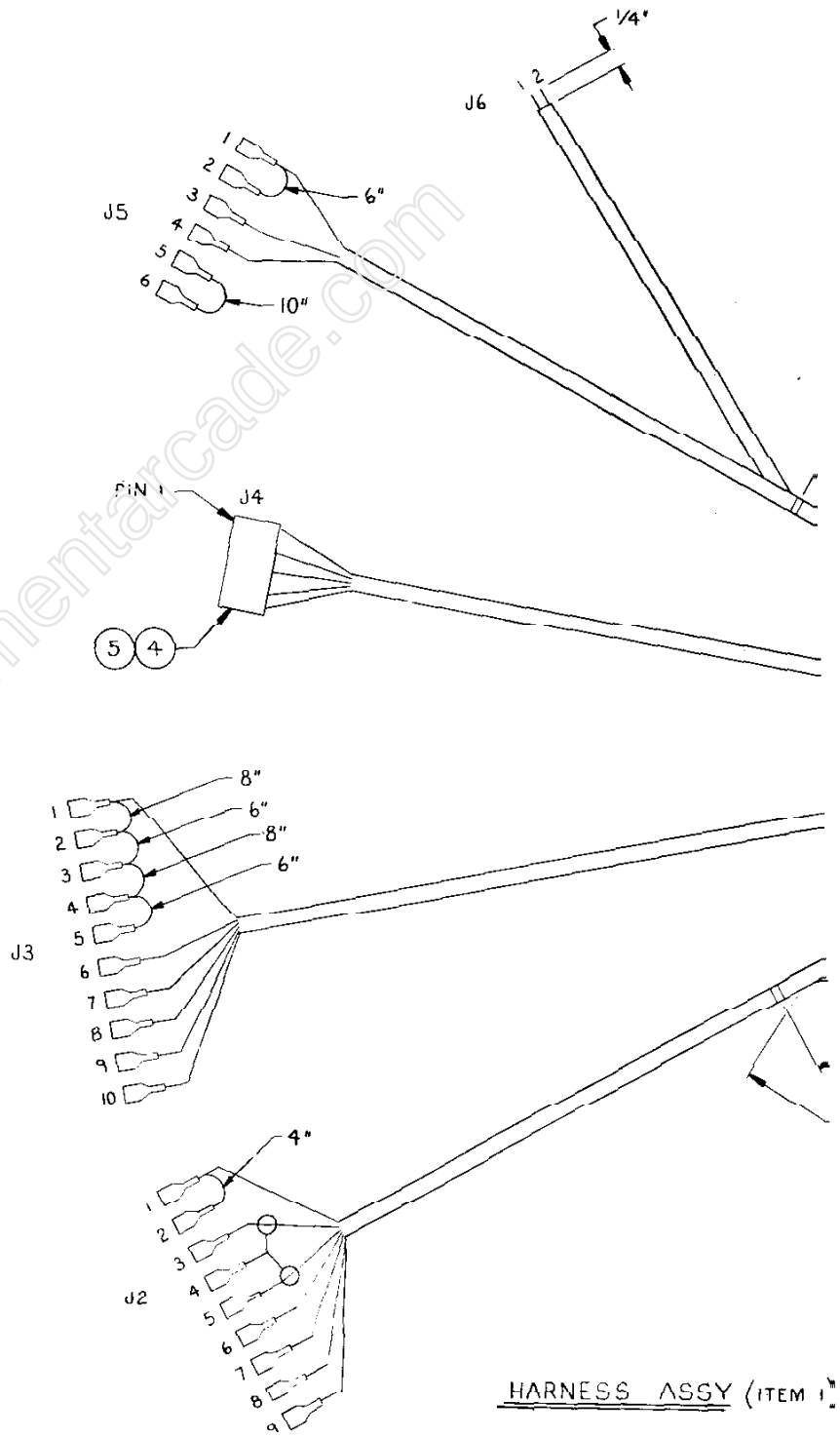

HARNESS ASSY (ITEM 1)

www.basementarcade.com

REVISIONS				
ZONE	LTR	DESCRIPTION	DATE	APPROVED
	A	RELEASED	2-8-80	

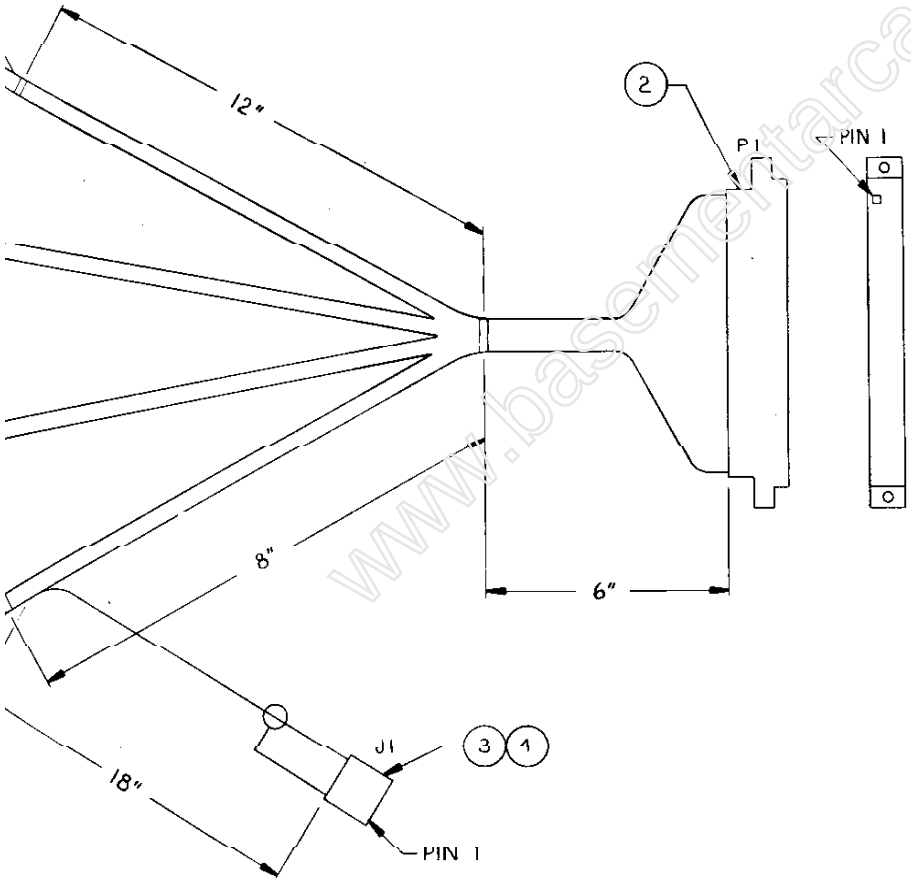

WIRE	FROM	TO	COLOR	INCH
47	J5 - 5	J5 - 6	JUMPER	10
46	J2 - 4	J1 - 1	SHLD. CA. GND	42
45	J2 - 5	J1 - 4	SHLD. CA. WHT	42
44	P1 - 22			
43	P1 - 21			
42	P1 - 20			
41	P1 - 19			
40	P1 - 18	J2 - 9	WHT / VIO	60
39	P1 - 17			
38	P1 - 16			
37	P1 - 15			
36	P1 - 14			
35	P1 - 13			
34	P1 - 12			
33	P1 - 11			
32	P1 - 10			
31	P1 - 9	J2 - 5	WHT/BLU	60
30	P1 - 8	J5 - 3	WHT/GRN	60
29	P1 - 7	J2 - 4	SHLD.CA.GND	42
28	P1 - 6	J4 - 8	BLK	20
27	P1 - 5	J4 - 5	BLU	20
26	P1 - 4	J4 - 1	RED	20
25	P1 - 3			
24	P1 - 2			
23	P1 - 1	J2-1,2 / J5-4	BLK	60
22	P1 - Z	J6 - 2	WHT / YEL	47
21	P1 - Y	J6 - 1	WHT/ORN	47
20	P1 - X			
19	P1 - W			
18	P1 - V	J2 - 6	WHT / RED	60
17	P1 - U	P1 - R	JUMPER	2
16	P1 - T	P1 - P	JUMPER	2
15	P1 - S	P1 - N	JUMPER	2
14	P1 - R	J3 - 10	WHT / BRN	65
13	P1 - P	J3 - 9	WHT/BLK	58
12	P1 - N	J3 - 8	GRY	59
11	P1 - M	J3 - 7	VIO	66
10	P1 - L	J3 - 6	YEL	61
9	P1 - K	J2 - 7	ORN	60
8	P1 - J	J5 - 1,2	BRN	60
7	P1 - H	J2 - 3	SHLD. CA. WHT	42
6	P1 - F	J4 - 7	WHT	20
5	P1 - E	J4 - 3	GRN	20
4	P1 - D			
3	P1 - C			
2	P1 - B			
1	P1 - A	J3-1,2,3,4,5	BLK	62

WIRE LIST

800-3010

QTY REQD	CODE IDENT	PART OR IDENTIFYING NO.	NOMENCLATURE OR DESCRIPTION

PARTS LIST

UNLESS OTHERWISE SPECIFIED DIMENSIONS ARE IN INCHES TOLERANCES ARE:
FRACTIONS ± DECIMALS .XX ± .XXX ± ANGLES ±

MATERIAL: NOTED

FINISH

DO NOT SCALE DRAWING

CONTRACT NO.

APPROVALS		DATE
DRAWN	MAHONEY	2-6-80
CHECKED		2-8-80

Gremlin Industries, Inc.
San Diego, California 92123

ASSY HARNESS
MASTER A F

SIZE	CODE IDENT NO.	DRAWING NO.	REV.
D		800-3010	A

SCALE NONE SHEET 3 OF 3

NEXT ASSY	USED ON
APPLICATION	

EM 1)

www.basementarcade.com

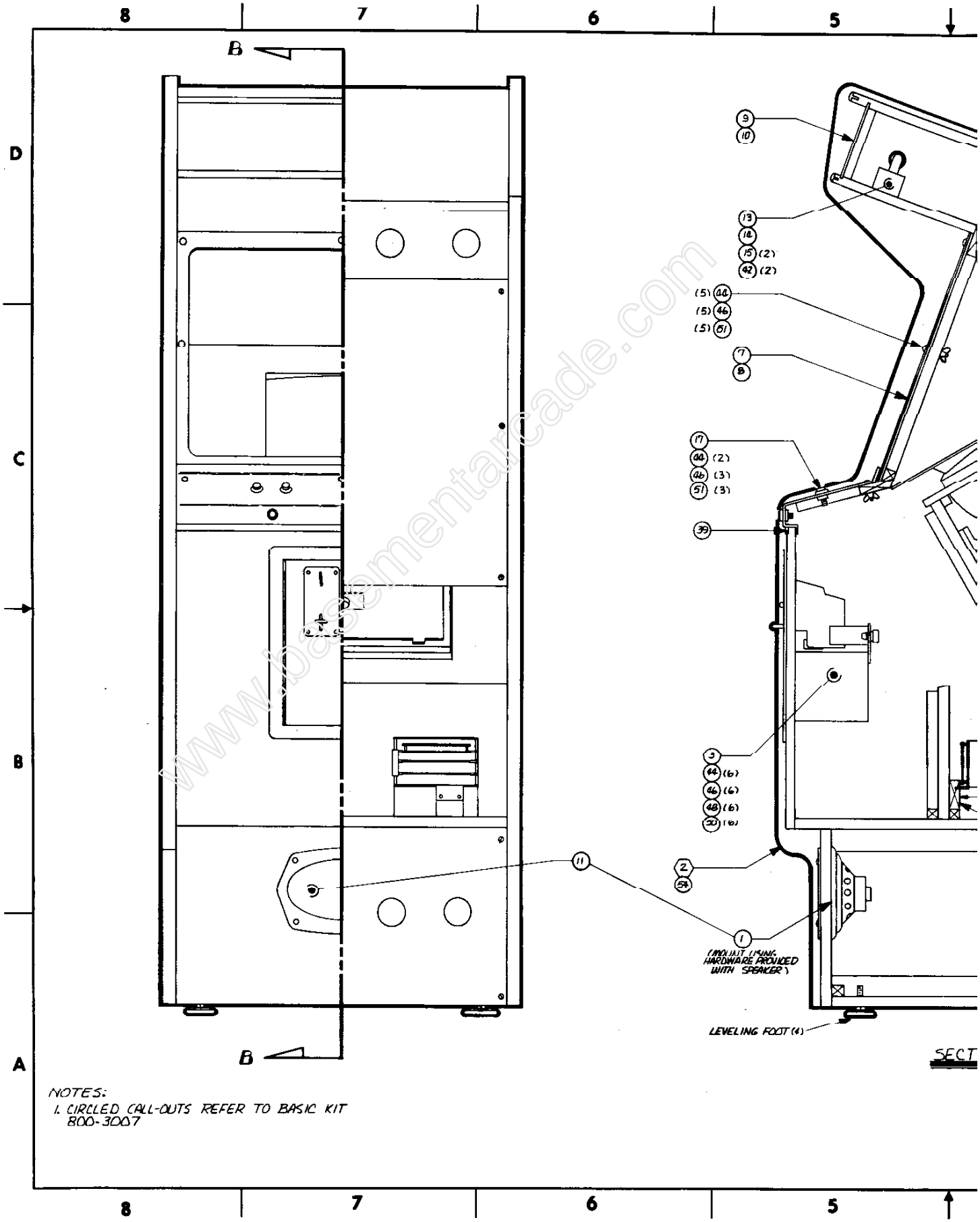

NOTES:
1. CIRCLED CALL-OUTS REFER TO BASIC KIT 800-3007

www.basementarcade.com

REVISIONS				
ZONE	LTR	DESCRIPTION	DATE	APPROVED
	A	RELEASED	2 8 80	

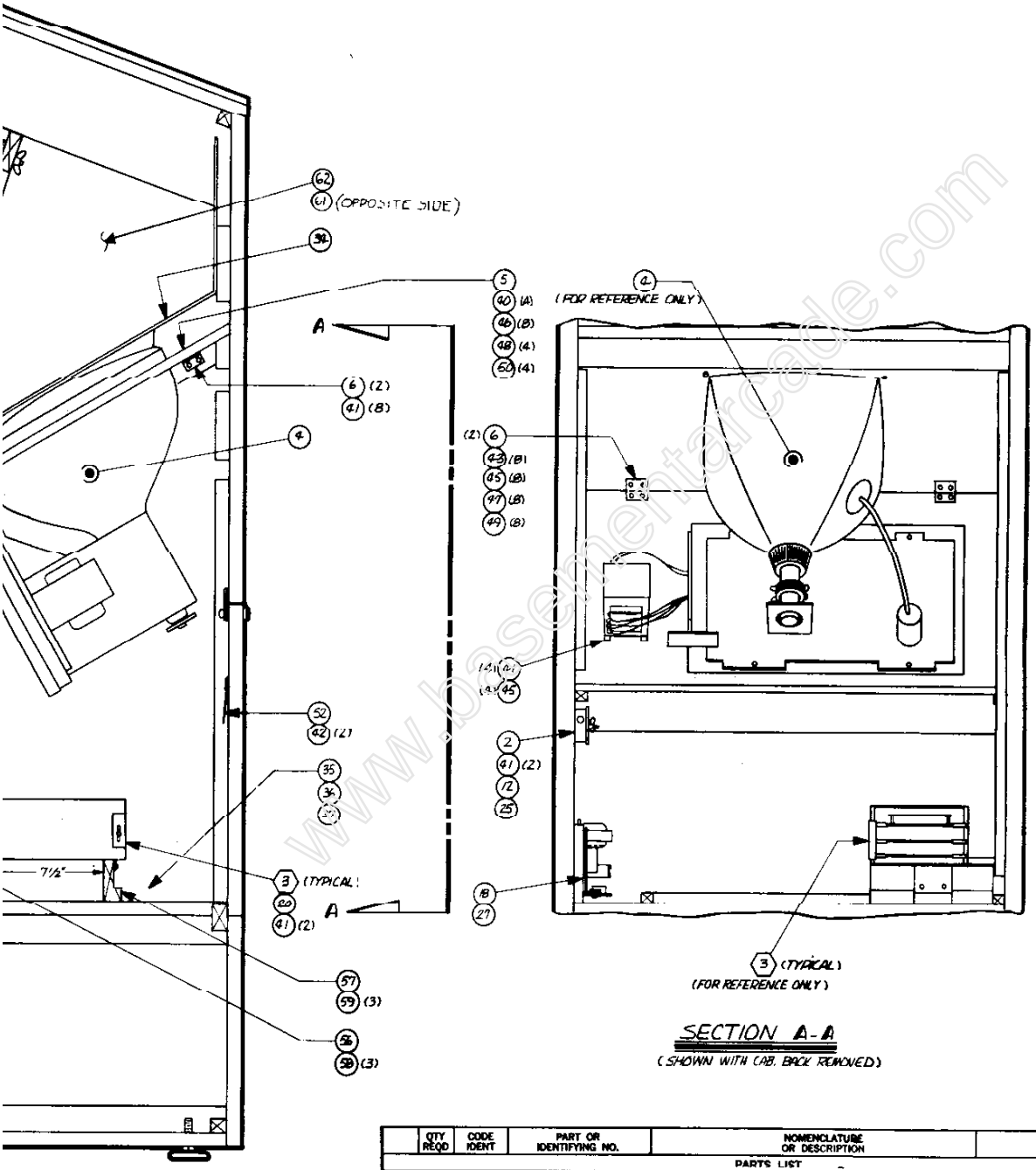

SECTION A-A
(SHOWN WITH CAB. BACK REMOVED)

SECTION B-B

QTY REQD	CODE IDENT	PART OR IDENTIFYING NO.	NOMENCLATURE OR DESCRIPTION

PARTS LIST

UNLESS OTHERWISE SPECIFIED DIMENSIONS ARE IN INCHES TOLERANCES ARE:
FRACTIONS ± DECIMALS .XX ± .XXX ± ANGLES ±

MATERIAL — NOTED —

FINISH

DO NOT SCALE DRAWING

CONTRACT NO.

APPROVALS	DATE
DRAWN Ron Hawthe	2-7-80
CHECKED	2-8-80

Gremlin Industries, Inc.
San Diego, California 92123

TOP ASSEMBLY
ASTROFIGHTER

SIZE	CODE IDENT NO.	DRAWING NO.	REV.
D		700-0005	A

SCALE NONE SHEET 3 OF 5

NEXT ASSY	USED ON
APPLICATION	

700-0005

www.basementarcade.com

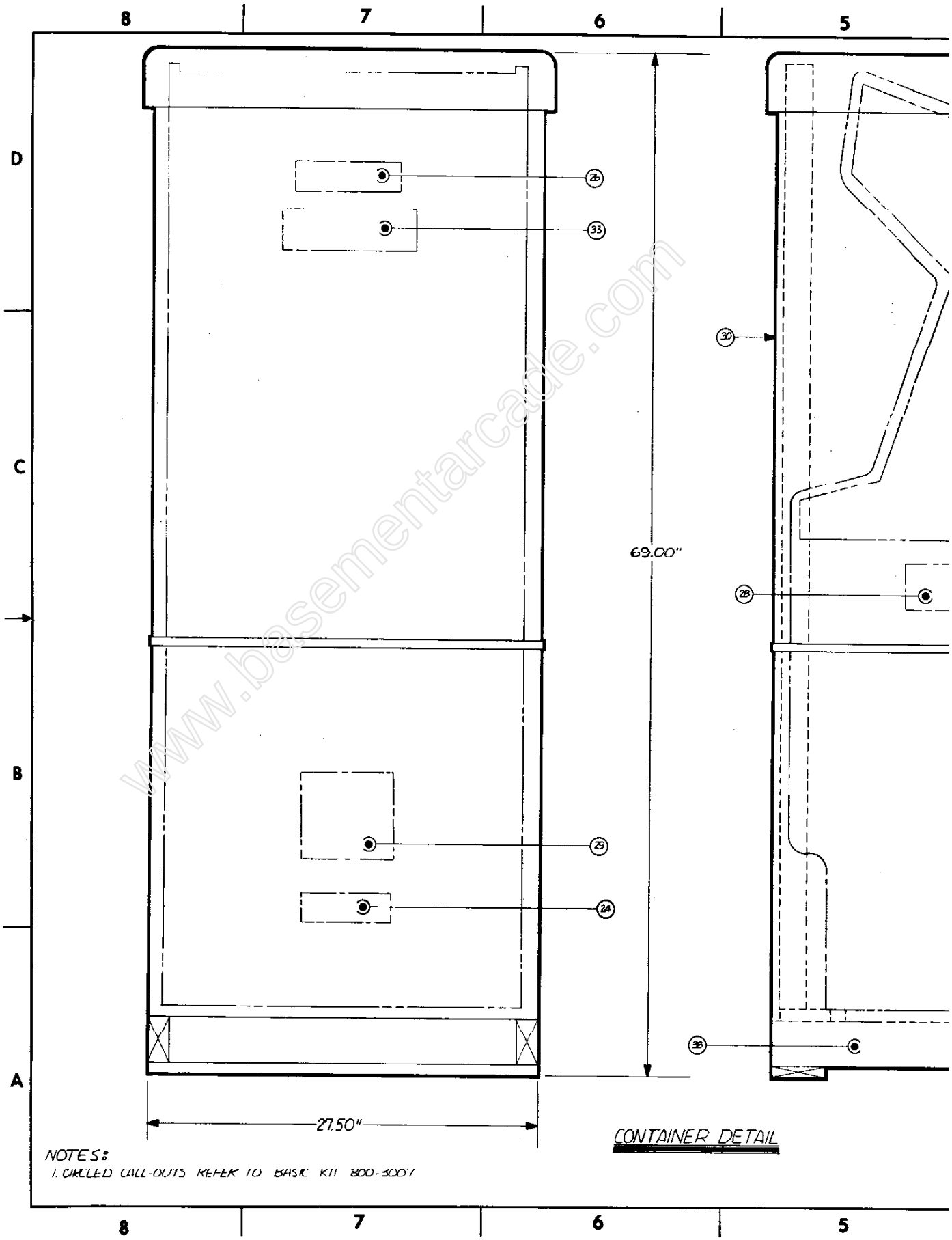

www.basementarcade.com

REVISIONS				
ZONE	LTR	DESCRIPTION	DATE	APPROVED
	A	RELEASED	2-8-80	

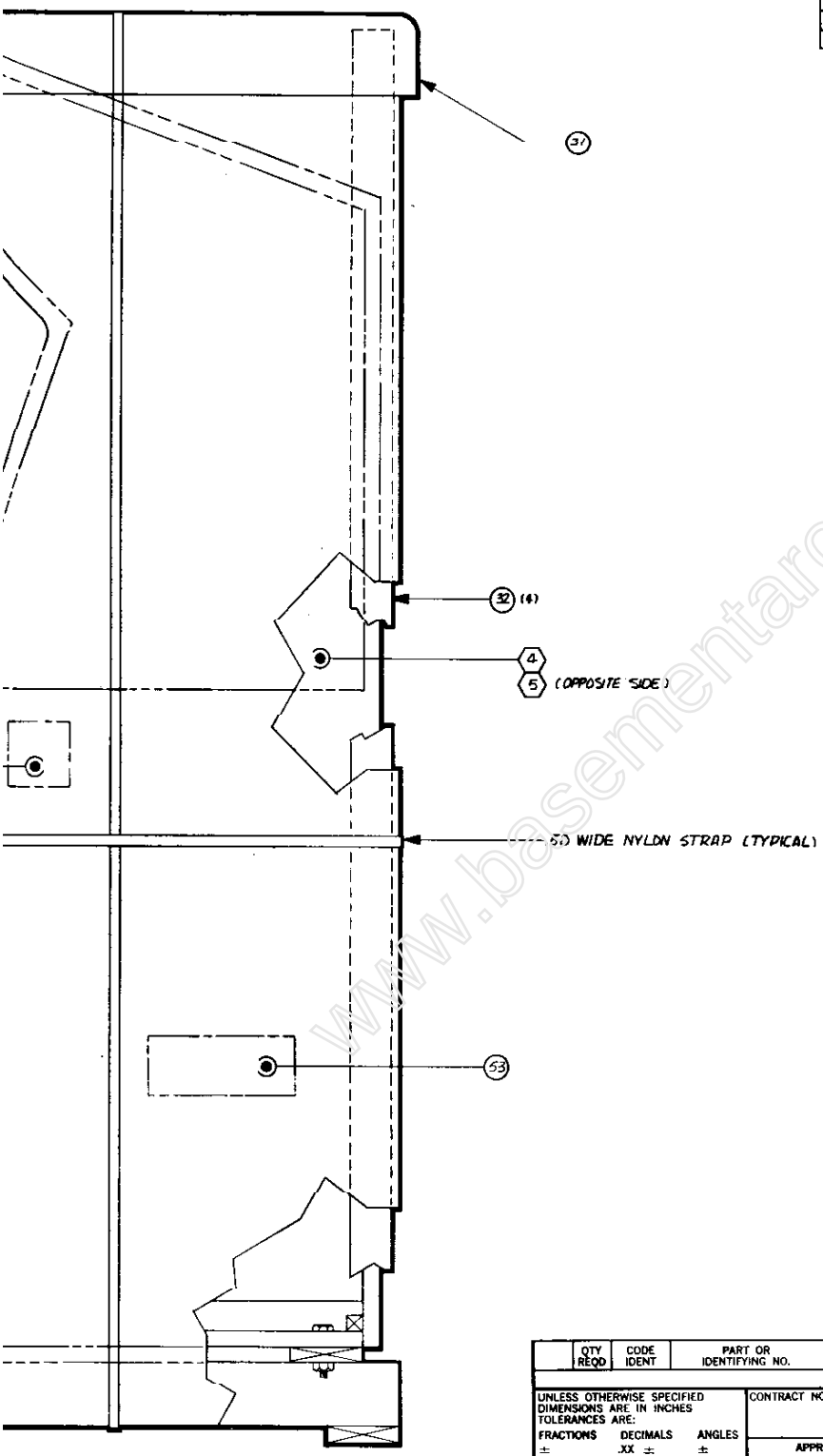

QTY REQD	CODE IDENT	PART OR IDENTIFYING NO.	NOMENCLATURE OR DESCRIPTION

PARTS LIST

UNLESS OTHERWISE SPECIFIED DIMENSIONS ARE IN INCHES TOLERANCES ARE:
FRACTIONS ± DECIMALS .XX ± .XXX ± ANGLES ±

MATERIAL — NOTED —

FINISH

DO NOT SCALE DRAWING

CONTRACT NO.

APPROVALS	DATE
DRAWN Ron Hawtree	2-8-80
CHECKED	2-8-80

Gremlin Industries, Inc.
San Diego, California 92123

TOP ASSEMBLY
ASTRO FIGHTER

SIZE	CODE IDENT NO.	DRAWING NO.	REV.
D		700-0005	A

SCALE NONE SHEET 4 OF 5

NEXT ASSY	USED ON
APPLICATION	

700-0005 A

www.basementarcade.com

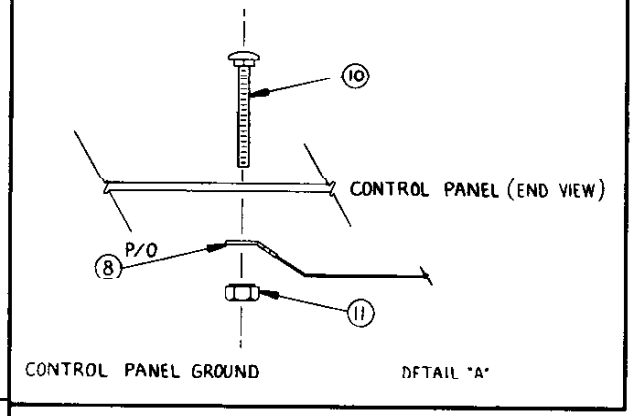

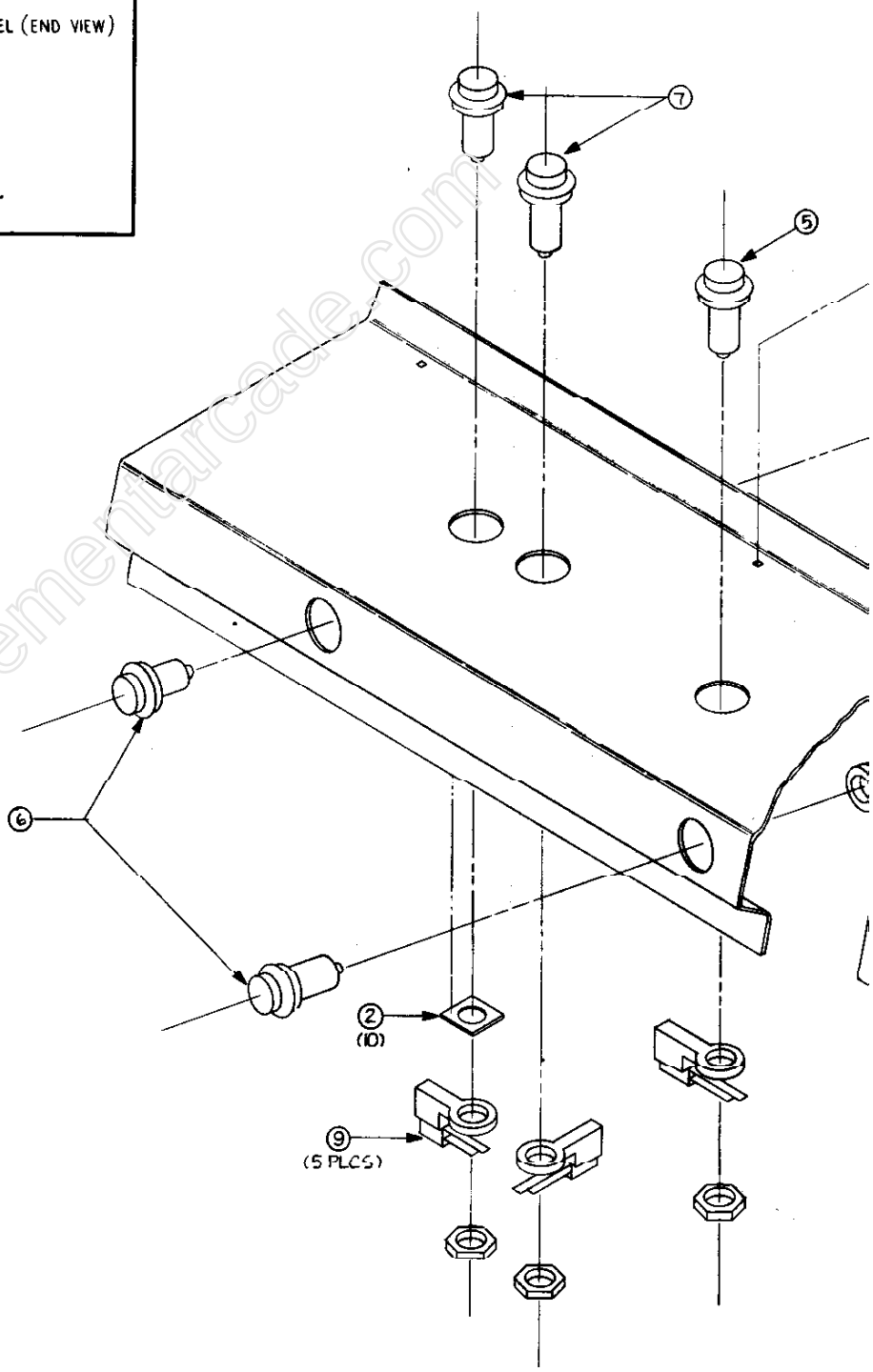

NOTES:

www.basementarcade.com

REVISIONS				
ZONE	LTR	DESCRIPTION	DATE	APPROVED
	A	RELEASED J.M	2-8-80	
	B	CHG'D PER ECN 378 SB	3-10-80	

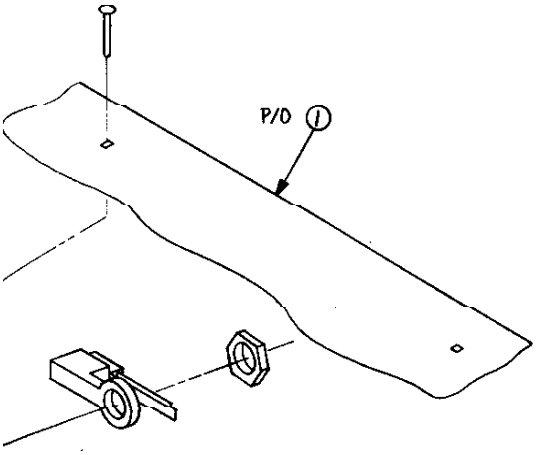

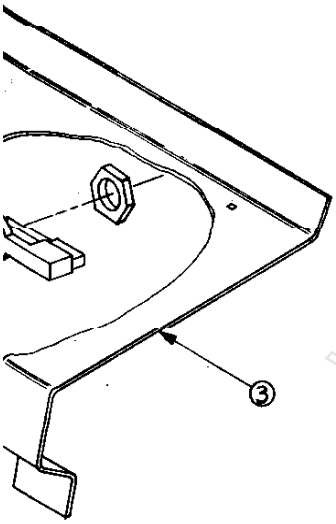

www.basementarcade.com

QTY REQD	CODE IDENT	PART OR IDENTIFYING NO.	NOMENCLATURE OR DESCRIPTION

PARTS LIST

UNLESS OTHERWISE SPECIFIED DIMENSIONS ARE IN INCHES TOLERANCES ARE:
FRACTIONS ± DECIMALS .XX ± .XXX ± ANGLES ±

MATERIAL

FINISH

DO NOT SCALE DRAWING

CONTRACT NO.

APPROVALS	DATE
DRAWN MAHONEY	2-8-80
CHECKED	2-8-80

Gremlin Industries, Inc.
San Diego, California 92123

ASSEMBLY CONTROL PANEL
ASTRO FIGHTER

SIZE	CODE IDENT NO.	DRAWING NO.	REV.
D		800-3009	B

SCALE NONE SHEET 3 OF 3

NEXT ASSY	USED ON
APPLICATION	

800-3009 B

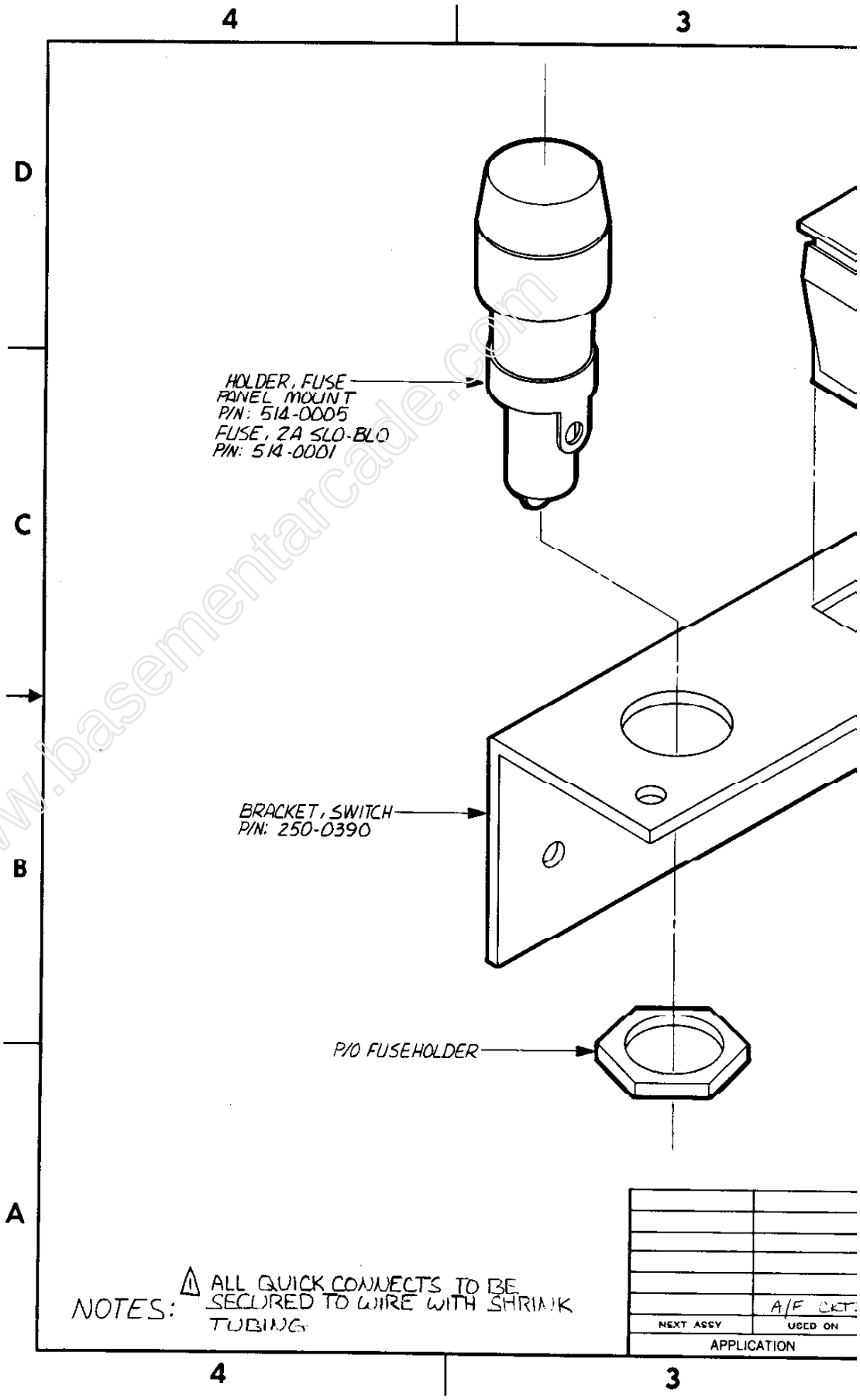

www.basementarcade.com

REVISIONS				
ZONE	LTR	DESCRIPTION	DATE	APPROVED
	A	RELEASED	2-13-80	
	A	B.O.M. CHG. (WIRE NUT P/N)	3-27-80	

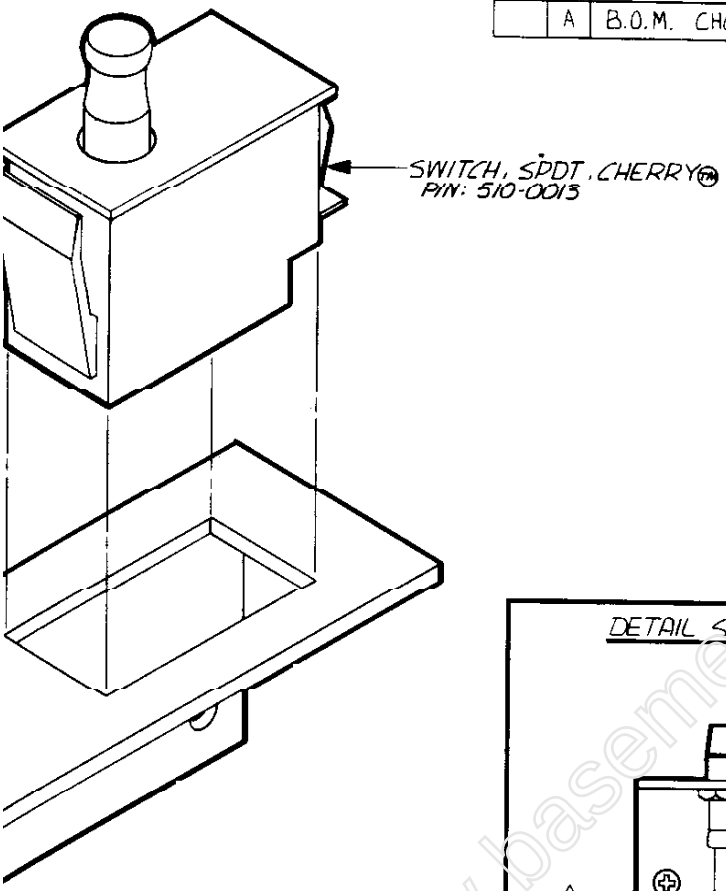

DETAIL SHOWING WIRING HOOKUP

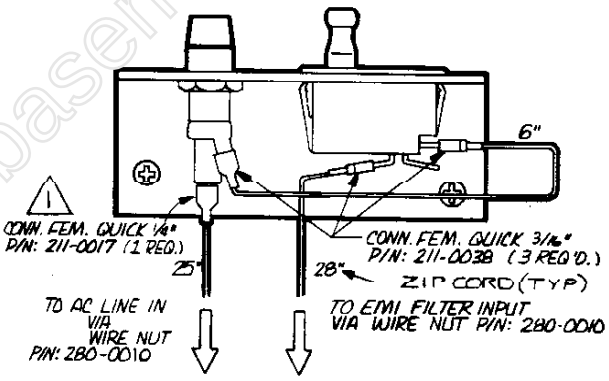

(NOT TO SCALE)

QTY REQD	CODE IDENT	PART OR IDENTIFYING NO.	NOMENCLATURE OR DESCRIPTION

PARTS LIST

UNLESS OTHERWISE SPECIFIED DIMENSIONS ARE IN INCHES
TOLERANCES ARE:
FRACTIONS ± DECIMALS .XX ± .XXX ± ANGLES ±

MATERIAL: NOTED

FINISH

DO NOT SCALE DRAWING

CONTRACT NO.

APPROVALS	DATE
DRAWN Ron Hawtree	2-13-80
CHECKED	2-13-80

Gremlin Industries, Inc.
San Diego, California 92123

ASS'Y. FUSEBLOCK

SIZE	CODE IDENT NO.	DRAWING NO.	REV.
C		800-3026	A

SCALE 2X SHEET 1 OF 1

800-3026 A

www.basementarcade.com

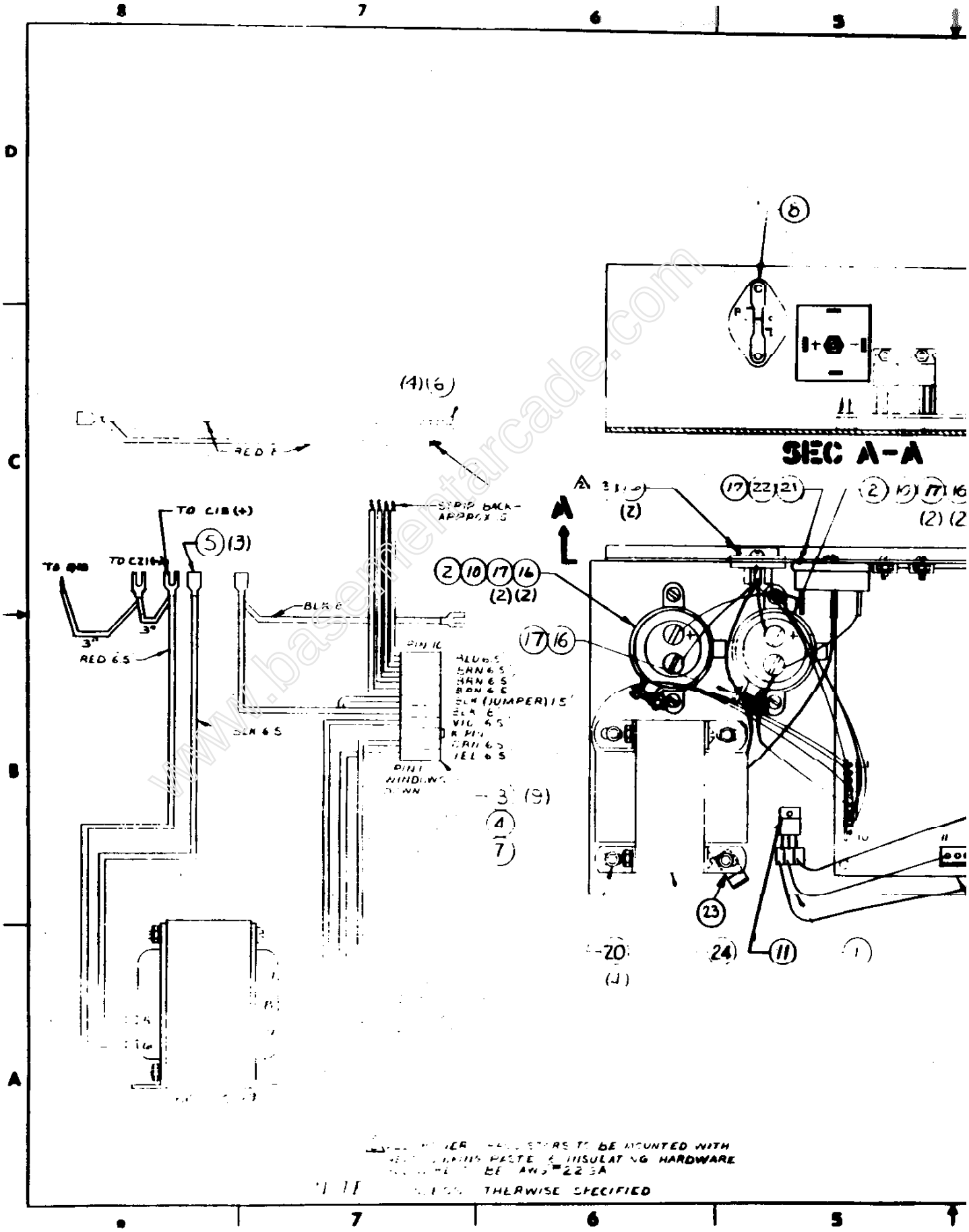

www.basementarcade.com

REVISIONS				
ZONE	LTR	DESCRIPTION	DATE	APPROVED
	A	RELEASED	12-5-79	
	B	[illegible]	[illegible]	

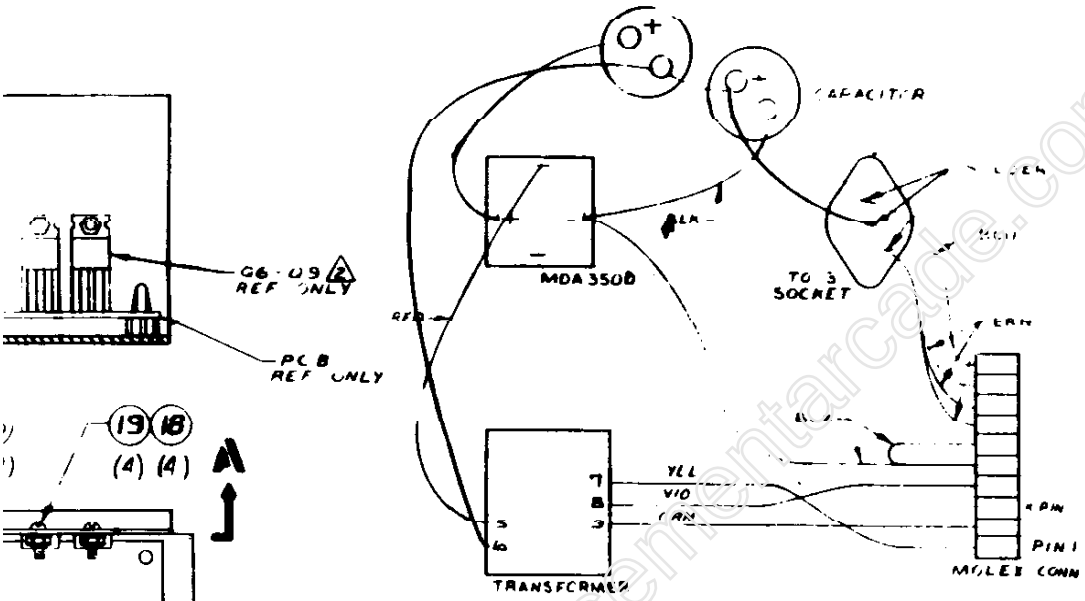

WIRING DIAGRAM

SEE DETACHED PARTS LIST

QTY REQD	CODE IDENT	PART OR IDENTIFYING NO	NOMENCLATURE OR DESCRIPTION

PARTS LIST

UNLESS OTHERWISE SPECIFIED DIMENSIONS ARE IN INCHES TOLERANCES ARE
FRACTIONS DECIMALS ANGLES

CONTRACT NO

APPROVALS	DATE
DRAWN	[illegible]
CHECKED	[illegible]

Gremlin Industries, Inc.
San Diego, California 92150

ASSY
POWER SUPPLY
DUAL GAMES

SIZE	CODE IDENT NO	DRAWING NO	REV
D		[illegible]077	B

SCALE [illegible] SHEET 3 OF

NEXT ASSY | USED ON
APPLICATION

DO NOT SCALE DRAWING

1500-0072 B

www.basementarcade.com

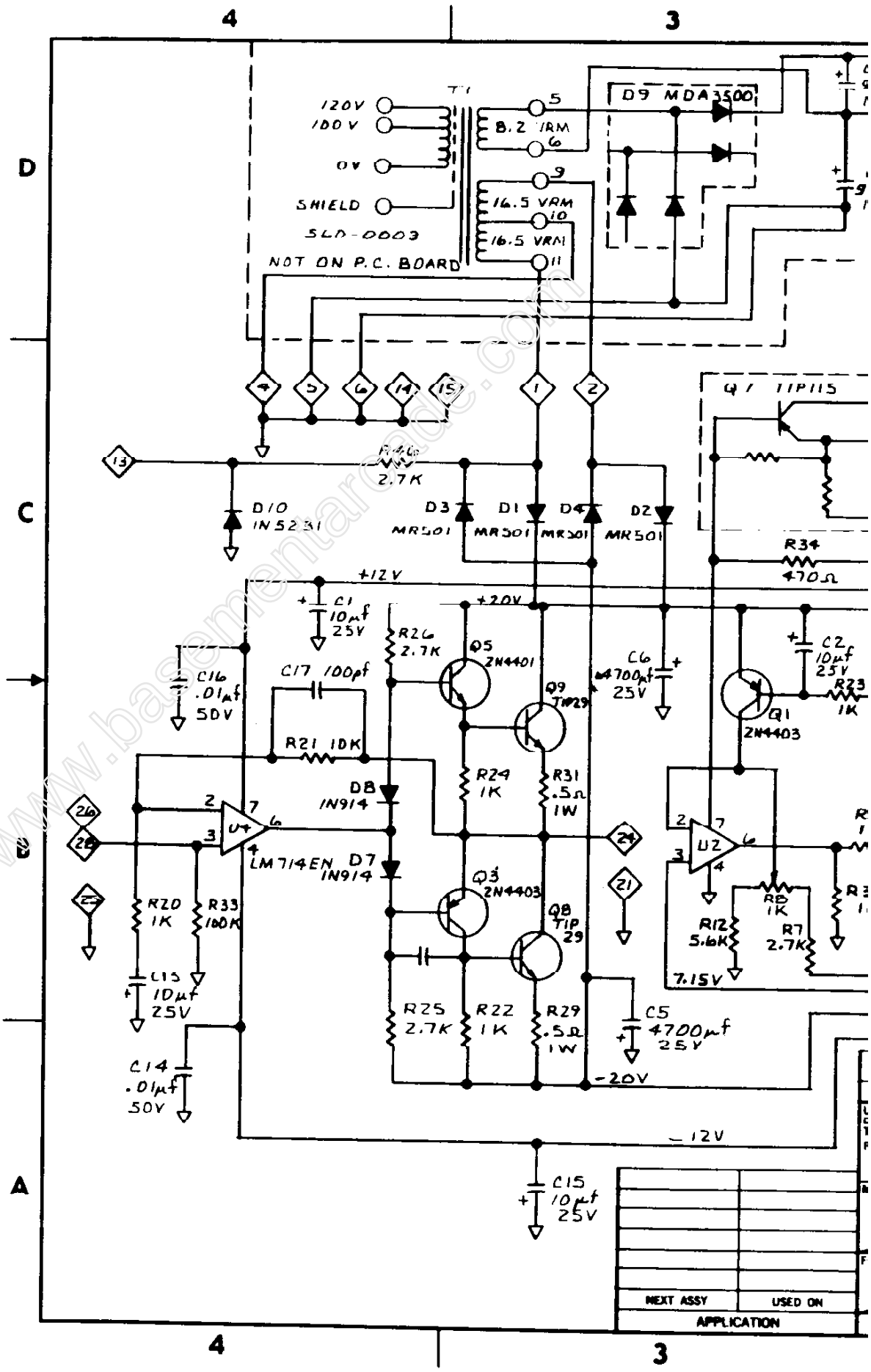

www.basementarcade.com

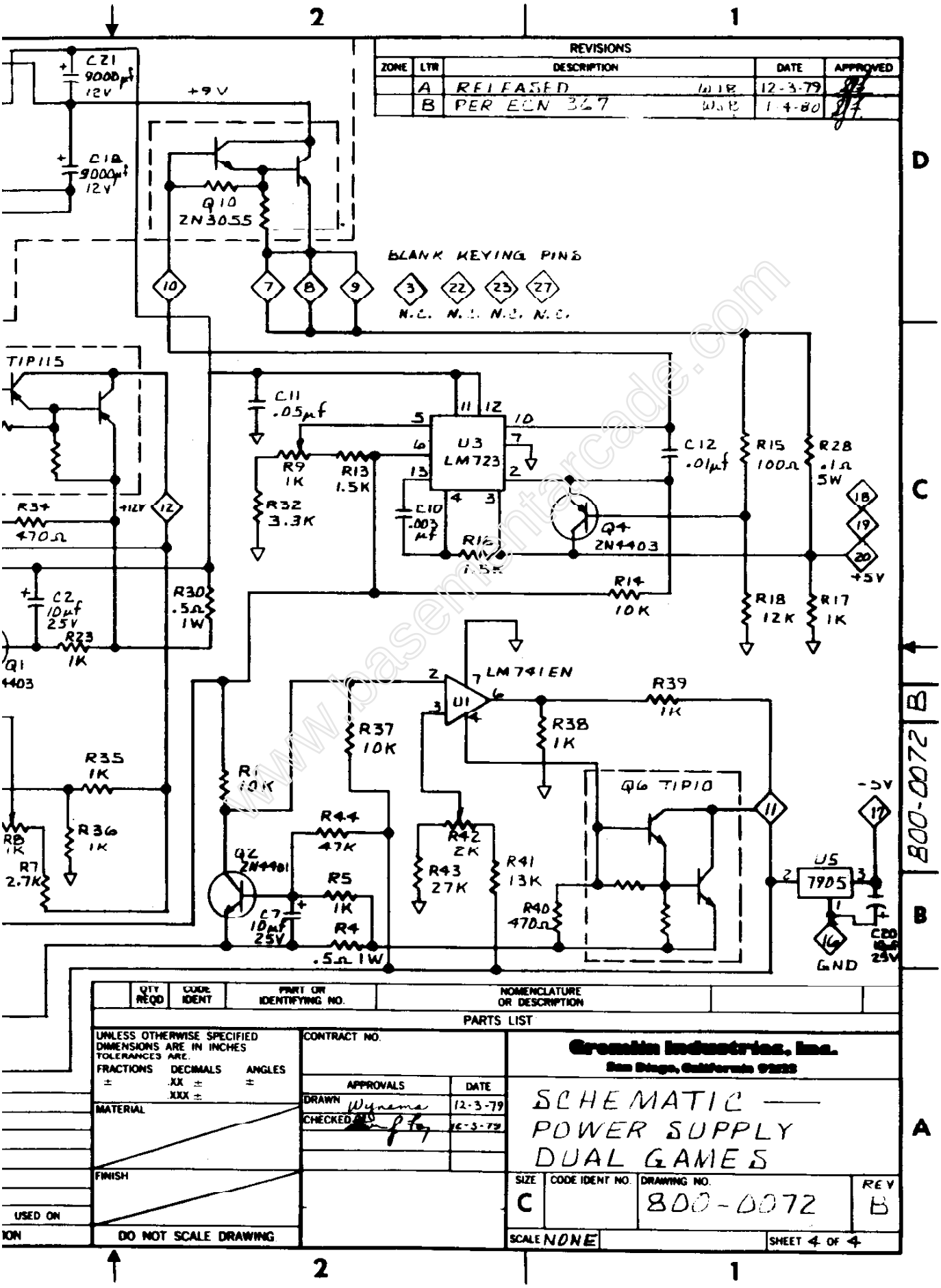
REVISIONS
ZONE | LTR | DESCRIPTION | DATE | APPROVED
A | RELEASED | WJB | 12-3-79
B | PER ECN 367 | WJB | 1-4-80
C21 9000µf 12V
C18 9000µf 12V
+9V
Q10 2N3055
BLANK KEYING PINS
3 22 23 27
N.C. N.C. N.C. N.C.
TIP115
C11 .05µf
U3 LM723
R9 1K
R13 1.5K
R32 3.3K
C10 .003µf
R16 1.5K
Q4 2N4403
C12 .01µf
R15 100Ω
R28 .1Ω 5W
+5V
R14 10K
R18 12K
R17 1K
R34 470Ω
+12V
C2 10µf 25V
R23 1K
R30 .5Ω 1W
Q1 4403
LM741EN
U1
R39 1K
R38 1K
R37 10K
R1 10K
R35 1K
R36 1K
R8 1K
R7 2.7K
Q6 TIP10
-5V
R44 47K
R42 2K
R43 27K
R41 13K
R40 470Ω
Q2 2N4401
R5 1K
C7 10µf 25V
R4 .5Ω 1W
U5 7905
GND
C20 10µf 25V
800-0072
QTY REQD | CODE IDENT | PART OR IDENTIFYING NO. | NOMENCLATURE OR DESCRIPTION
PARTS LIST
UNLESS OTHERWISE SPECIFIED DIMENSIONS ARE IN INCHES TOLERANCES ARE.
FRACTIONS ± DECIMALS .XX ± .XXX ± ANGLES ±
MATERIAL
FINISH
USED ON
DO NOT SCALE DRAWING
CONTRACT NO.
APPROVALS | DATE
DRAWN Wynema | 12-3-79
CHECKED | 12-3-79
Cromlin Industries, Inc.
San Diego, California 92123
SCHEMATIC — POWER SUPPLY DUAL GAMES
SIZE C
CODE IDENT NO.
DRAWING NO. 800-0072
REV B
SCALE NONE
SHEET 4 OF 4

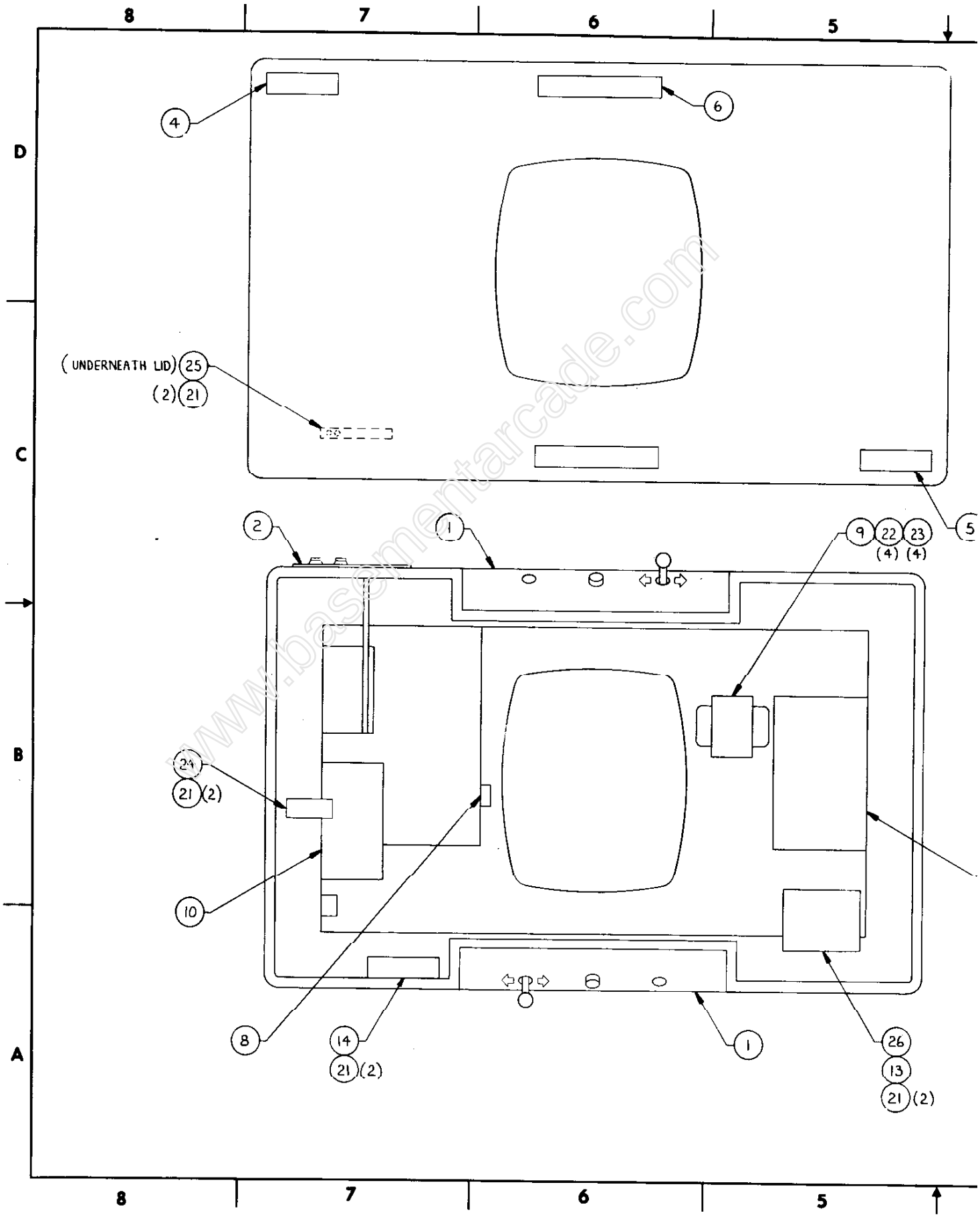

www.basementarcade.com

REVISIONS				
ZONE	LTR	DESCRIPTION	DATE	APPROVED
	A	RELEASED J.M	2-17-80	

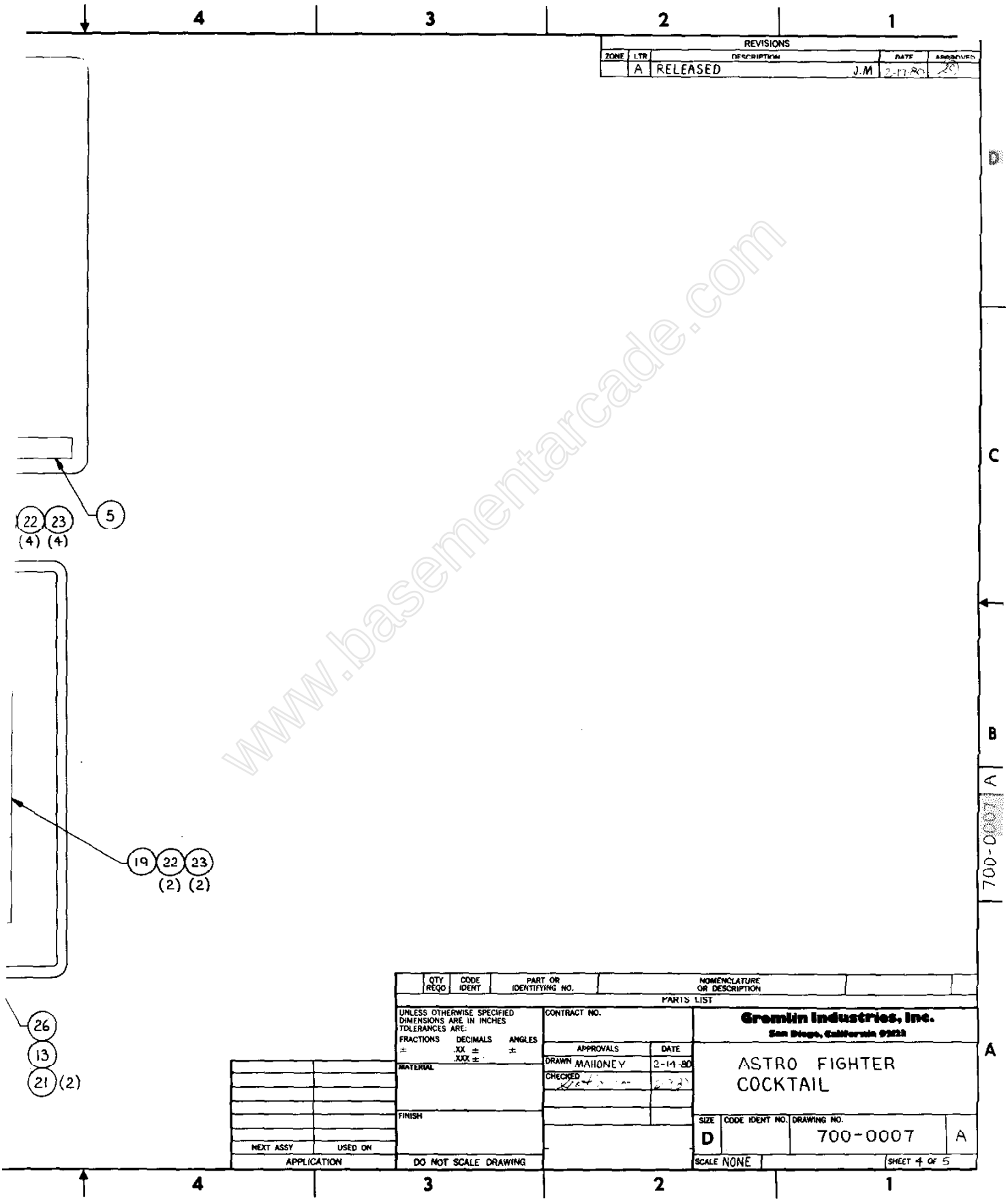

QTY REQD	CODE IDENT	PART OR IDENTIFYING NO.	NOMENCLATURE OR DESCRIPTION

PARTS LIST

UNLESS OTHERWISE SPECIFIED DIMENSIONS ARE IN INCHES
TOLERANCES ARE:
FRACTIONS ± DECIMALS .XX ± .XXX ± ANGLES ±

MATERIAL

FINISH

DO NOT SCALE DRAWING

CONTRACT NO.

APPROVALS	DATE
DRAWN MAHONEY	2-14-80
CHECKED	

Gremlin Industries, Inc.
San Diego, California 92123

ASTRO FIGHTER COCKTAIL

SIZE	CODE IDENT NO.	DRAWING NO.	
D		700-0007	A

SCALE NONE SHEET 4 OF 5

NEXT ASSY	USED ON
APPLICATION	

www.basementarcade.com

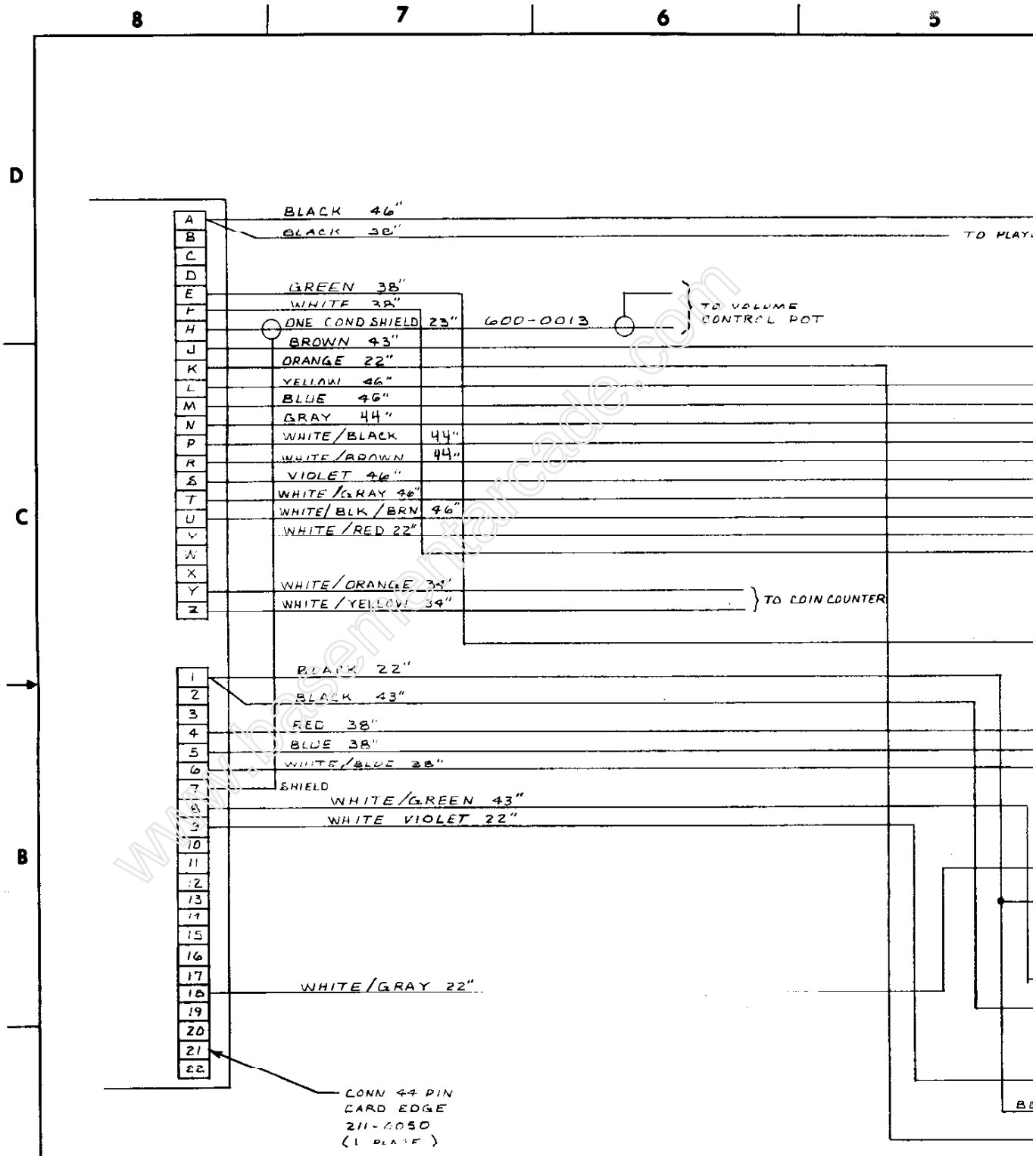

www.basementarcade.com

REVISIONS				
ZONE	LTR	DESCRIPTION	DATE	APPROVED
	A	RELEASED WJB	2-19-80	

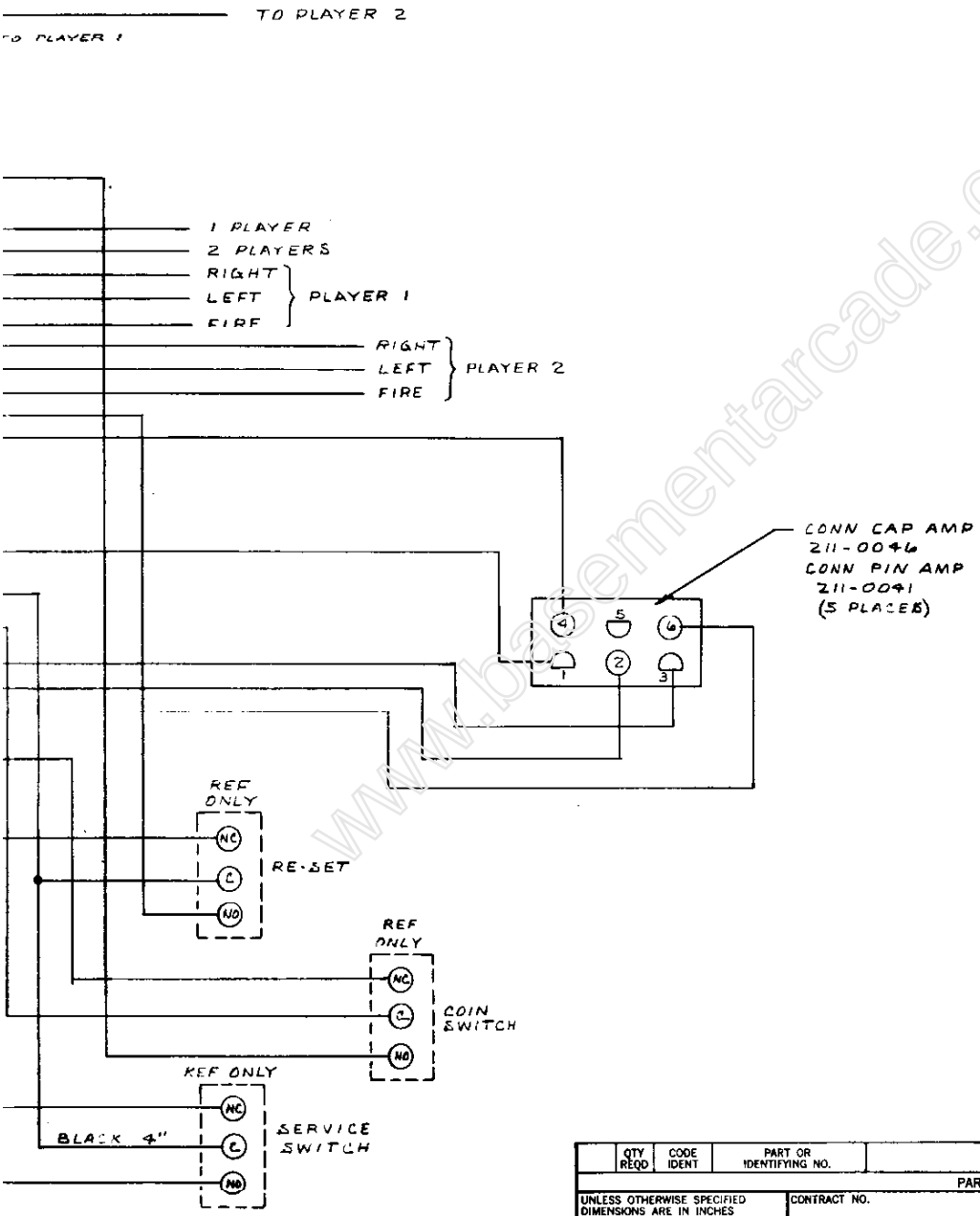

QTY REQD	CODE IDENT	PART OR IDENTIFYING NO.	NOMENCLATURE OR DESCRIPTION

PARTS LIST

UNLESS OTHERWISE SPECIFIED DIMENSIONS ARE IN INCHES TOLERANCES ARE:
FRACTIONS ± DECIMALS .XX ± .XXX ± ANGLES ±

MATERIAL

FINISH

DO NOT SCALE DRAWING

NEXT ASSY	USED ON
APPLICATION	

CONTRACT NO.

APPROVALS	DATE
DRAWN	2-12-80
CHECKED	

Gremlin Industries, Inc.
San Diego, California 92123

ASSEMBLY — HARNESS MASTER A/F COCKTAIL

SIZE	CODE IDENT NO.	DRAWING NO.	REV
D		800-3022	A

SCALE NONE SHEET 1 OF 1

800-3022 A

www.basementarcade.com

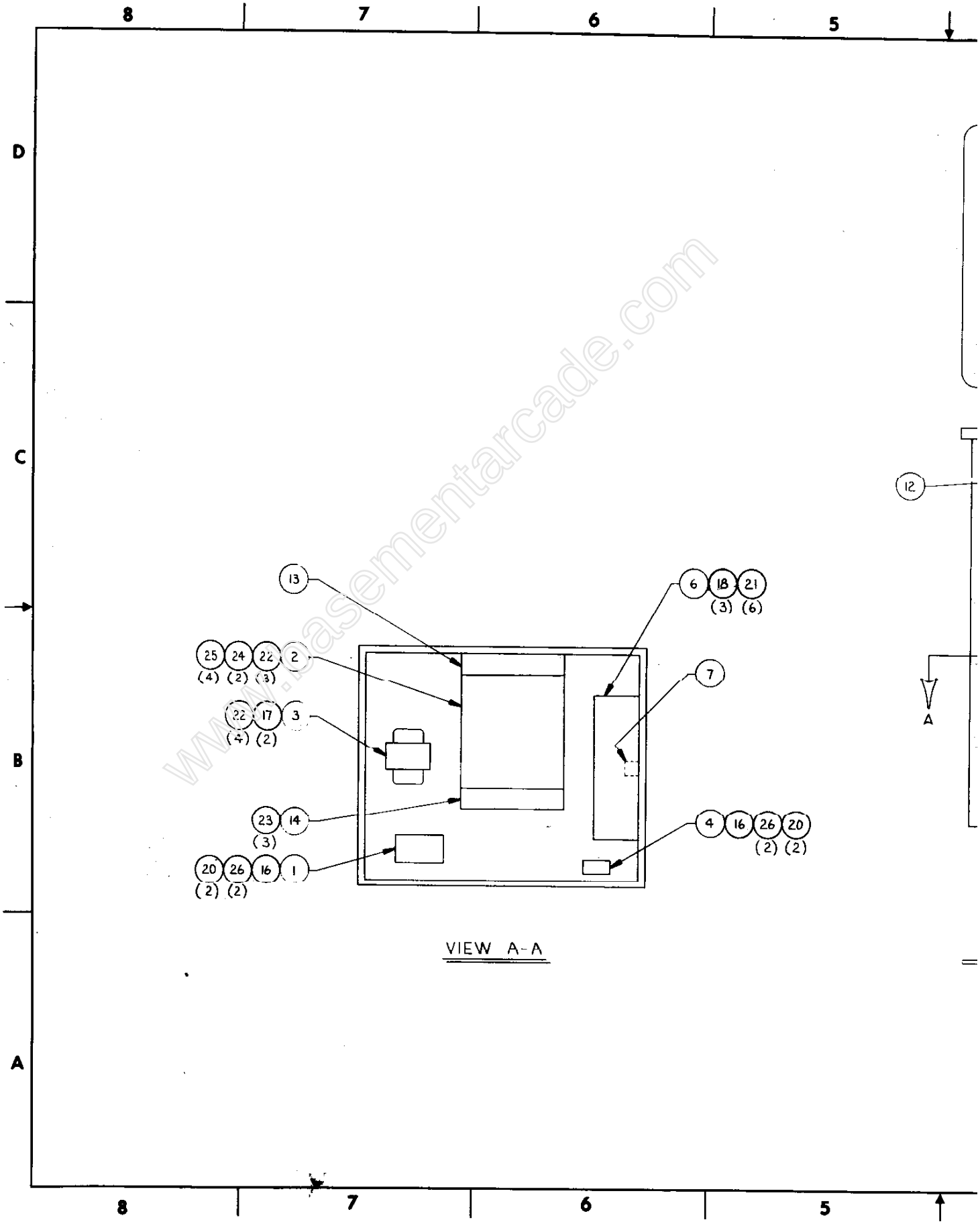

www.basementarcade.com

REVISIONS				
ZONE	LTR	DESCRIPTION	DATE	APPROVED
	A	RELEASED	3-3-80	

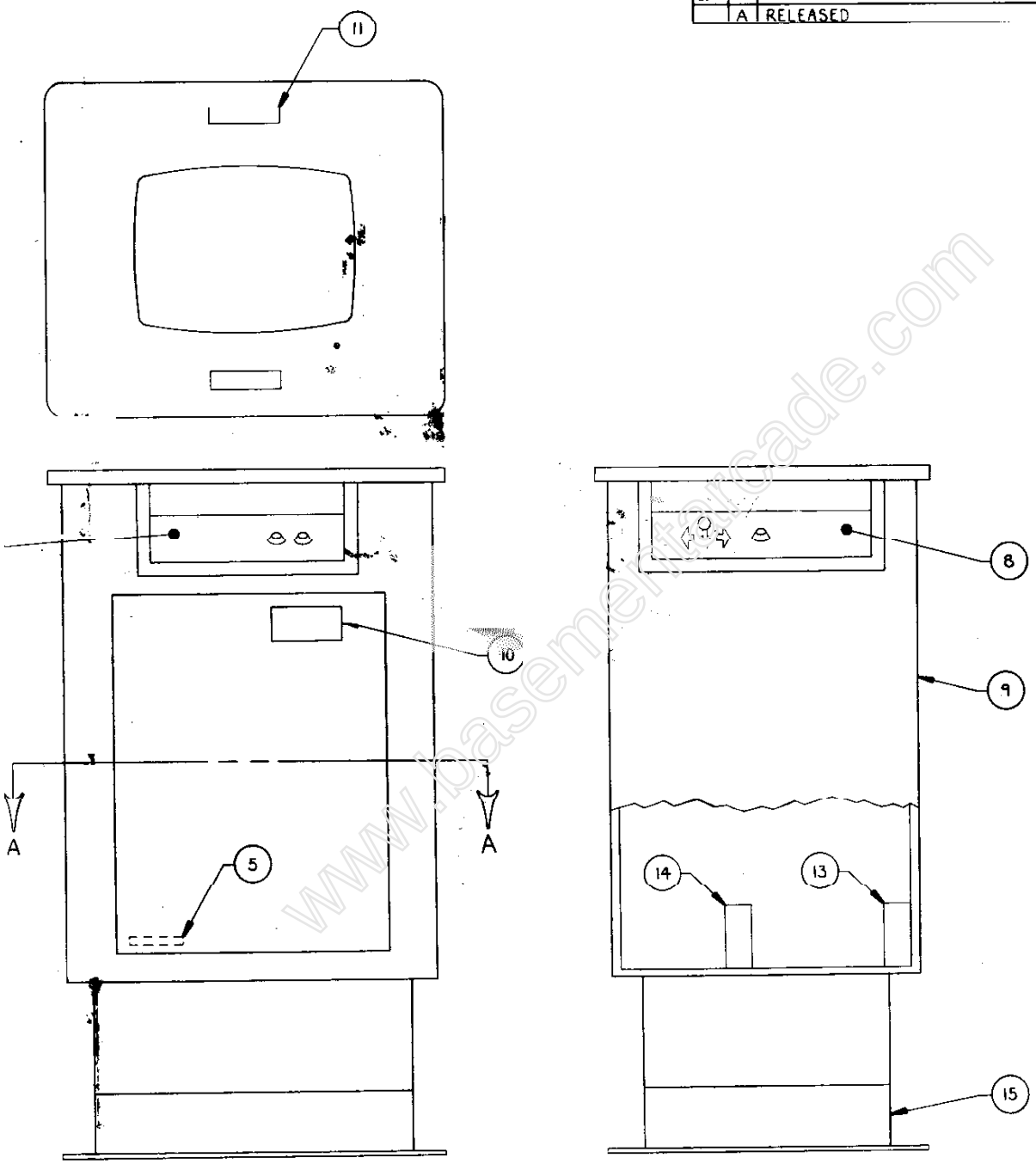

QTY REQD	CODE IDENT	PART OR IDENTIFYING NO.	NOMENCLATURE OR DESCRIPTION

PARTS LIST

UNLESS OTHERWISE SPECIFIED DIMENSIONS ARE IN INCHES
TOLERANCES ARE:
FRACTIONS ± DECIMALS .XX ± .XXX ± ANGLES ±

MATERIAL

FINISH

DO NOT SCALE DRAWING

CONTRACT NO.

APPROVALS	DATE
DRAWN MAHONEY	2-29-80
CHECKED	3-3-80

Gremlin Industries, Inc.
San Diego, California 92123

ASSY, TOP
GAME, SLIMLINE
ASTRO FIGHTER

SIZE	CODE IDENT NO.	DRAWING NO.	REV
D		700-0008	A

SCALE 1/4 SHEET 4 OF 6

NEXT ASSY	USED ON
APPLICATION	

700-0008 A

www.basementarcade.com

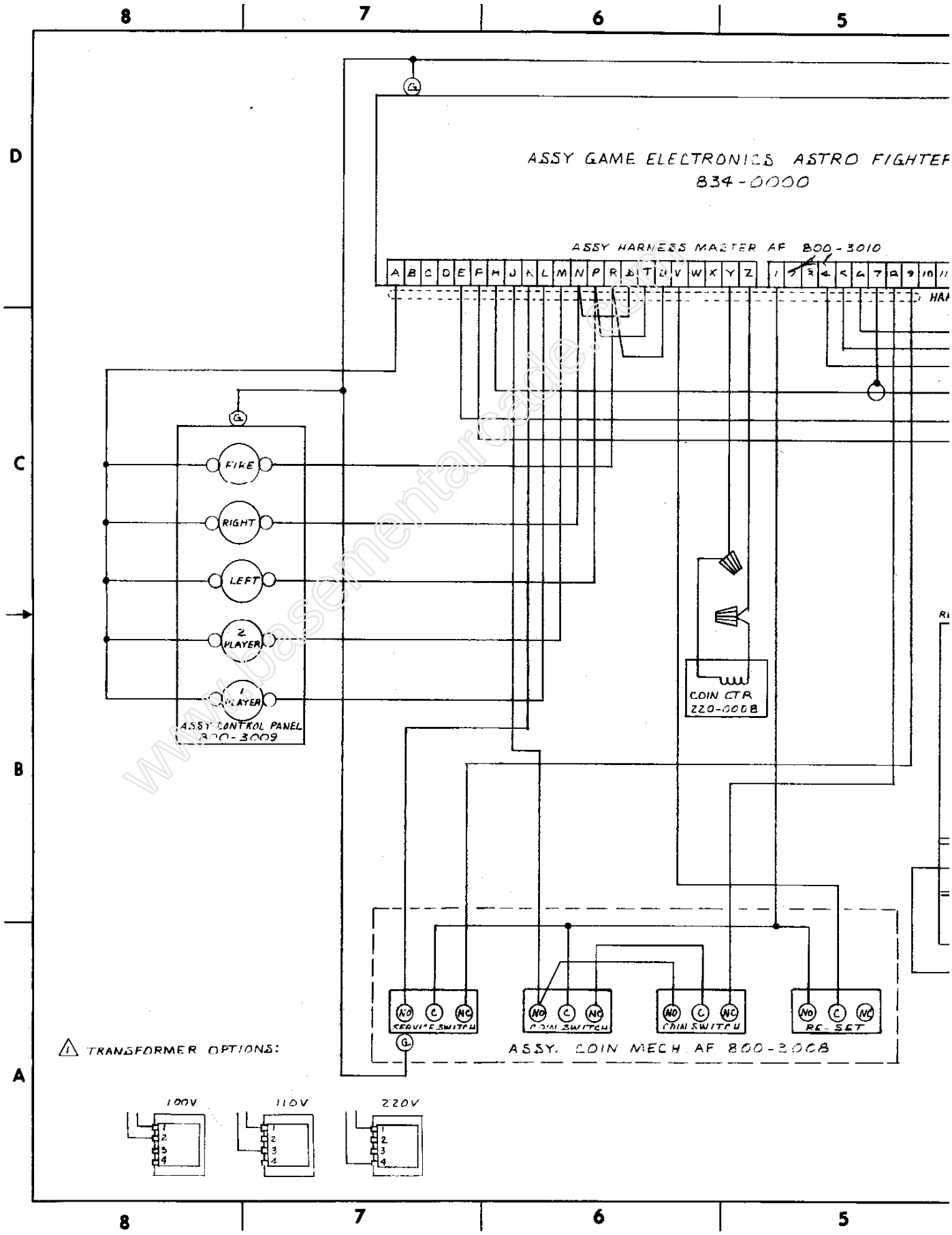

www.basementarcade.com

REVISIONS				
ZONE	LTR	DESCRIPTION	DATE	APPROVED
	A	RELEASED WJB	2-11-80	

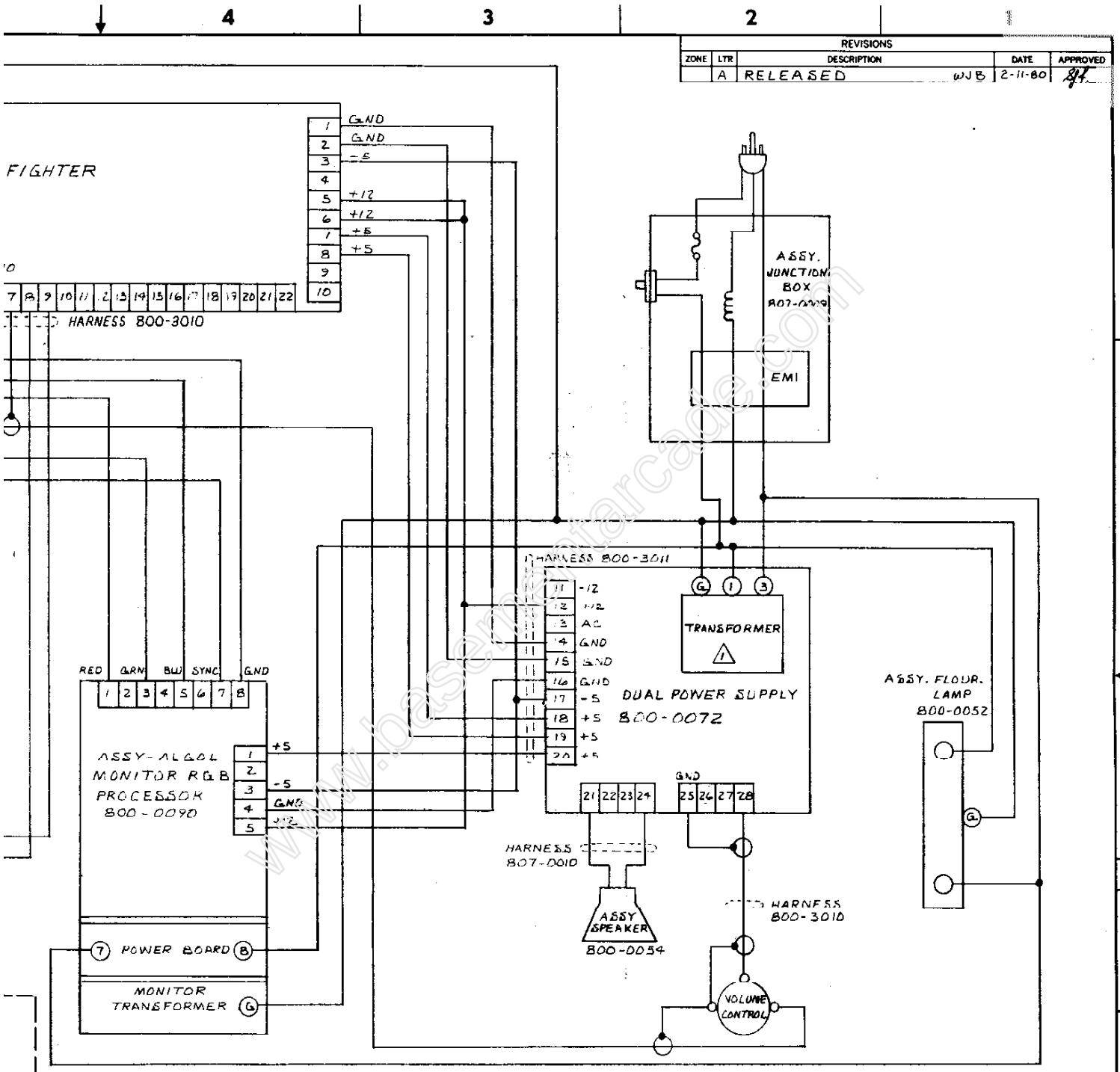

QTY REQD	CODE IDENT	PART OR IDENTIFYING NO.	NOMENCLATURE OR DESCRIPTION

PARTS LIST

UNLESS OTHERWISE SPECIFIED DIMENSIONS ARE IN INCHES TOLERANCES ARE:
FRACTIONS ± DECIMALS .XX ± .XXX ± ANGLES ±

MATERIAL

FINISH

NEXT ASSY | USED ON

APPLICATION

DO NOT SCALE DRAWING

CONTRACT NO.

APPROVALS	DATE
DRAWN D. Lemmon	2-11-80
CHECKED	2-11-80

Gremlin Industries, Inc.
San Diego, California 92123

TOP ASSEMBLY — ASTRO FIGHTER WIRING DIAGRAM

SIZE	CODE IDENT NO.	DRAWING NO.	REV
D		700-0005	A

SCALE NONE | SHEET 5 OF 5

700-0005 A

www.basementarcade.com

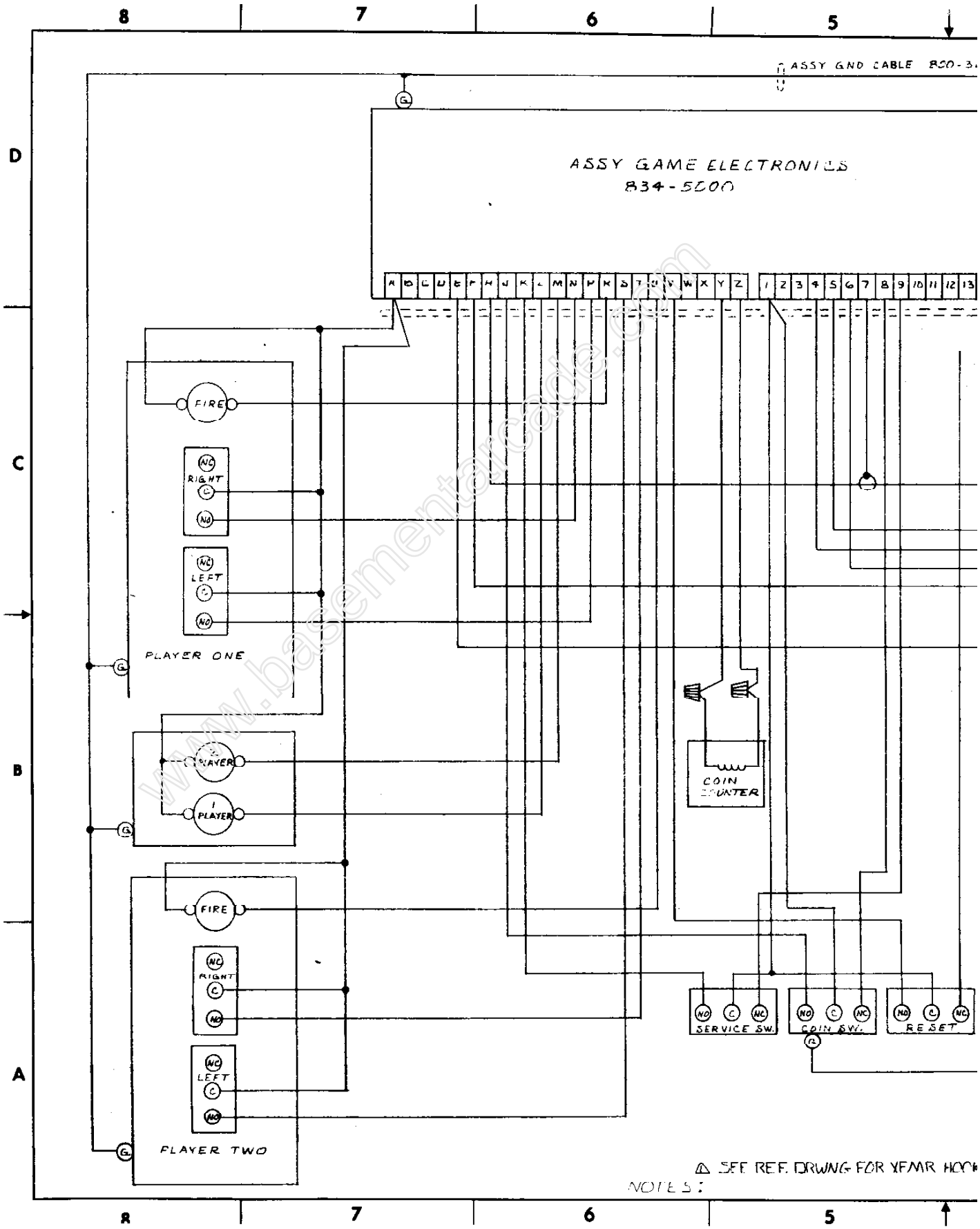

www.basementarcade.com

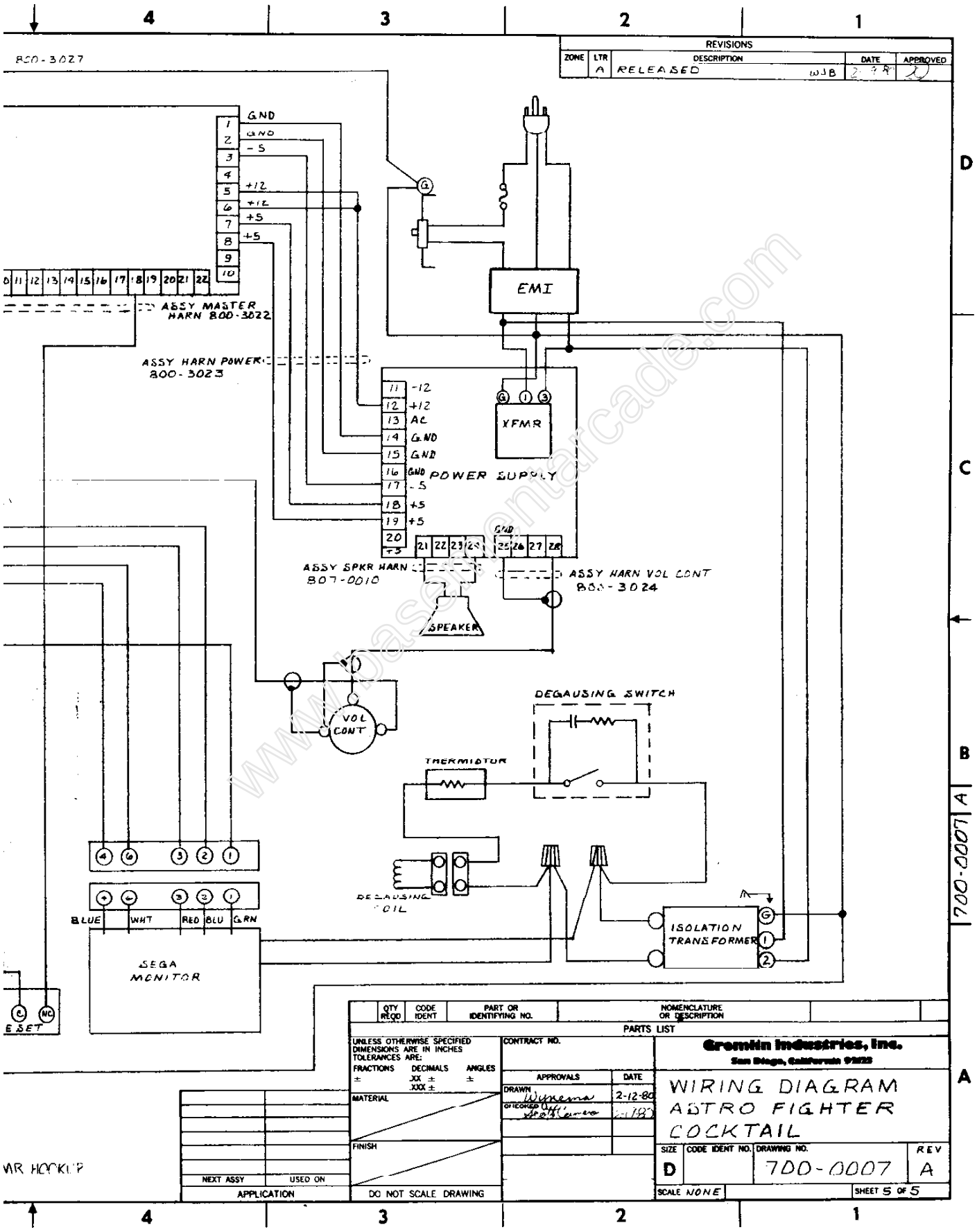
REVISIONS
ZONE | LTR | DESCRIPTION | DATE | APPROVED
A | RELEASED | WJB
800-3027
GND
GND
-5
+12
+12
+5
+5
ASSY MASTER HARN 800-3022
ASSY HARN POWER 800-3023
EMI
XFMR
-12
+12
AC
GND
GND
GND
-5
+5
+5
POWER SUPPLY
ASSY SPKR HARN 807-0010
ASSY HARN VOL CONT 800-3024
SPEAKER
VOL CONT
DEGAUSING SWITCH
THERMISTOR
DEGAUSING COIL
ISOLATION TRANSFORMER
BLUE
WHT
RED
BLU
GRN
SEGA MONITOR
700-0007
PARTS LIST
QTY REQD | CODE IDENT | PART OR IDENTIFYING NO. | NOMENCLATURE OR DESCRIPTION
UNLESS OTHERWISE SPECIFIED DIMENSIONS ARE IN INCHES TOLERANCES ARE:
FRACTIONS ± | DECIMALS .XX ± .XXX ± | ANGLES ±
MATERIAL
FINISH
DO NOT SCALE DRAWING
CONTRACT NO.
APPROVALS | DATE
DRAWN | 2-12-80
CHECKED
Cromlin Industries, Inc.
San Diego, California 92123
WIRING DIAGRAM
ASTRO FIGHTER
COCKTAIL
SIZE D | CODE IDENT NO. | DRAWING NO. 700-0007 | REV A
SCALE NONE | SHEET 5 OF 5
NEXT ASSY | USED ON
APPLICATION

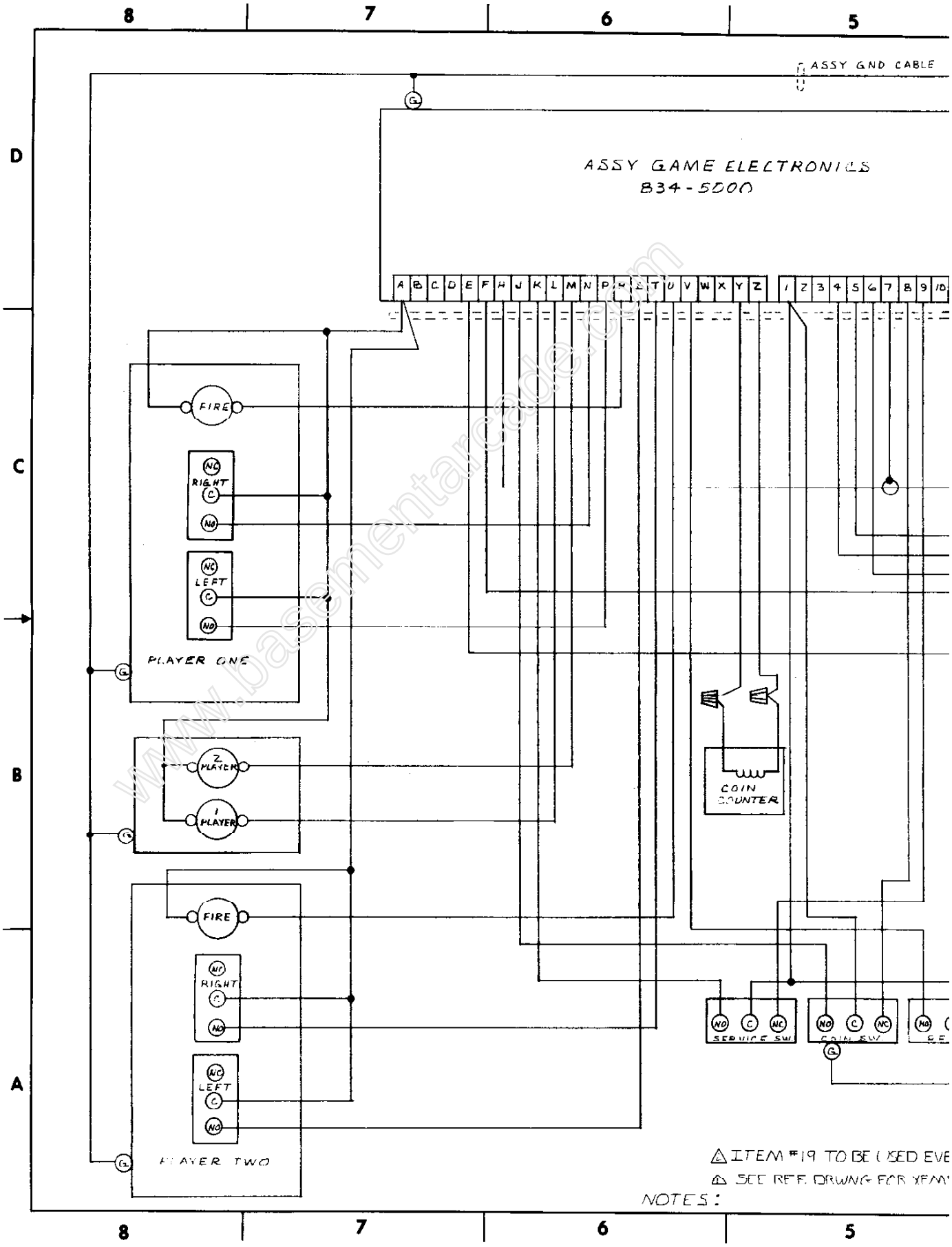

www.basementarcade.com

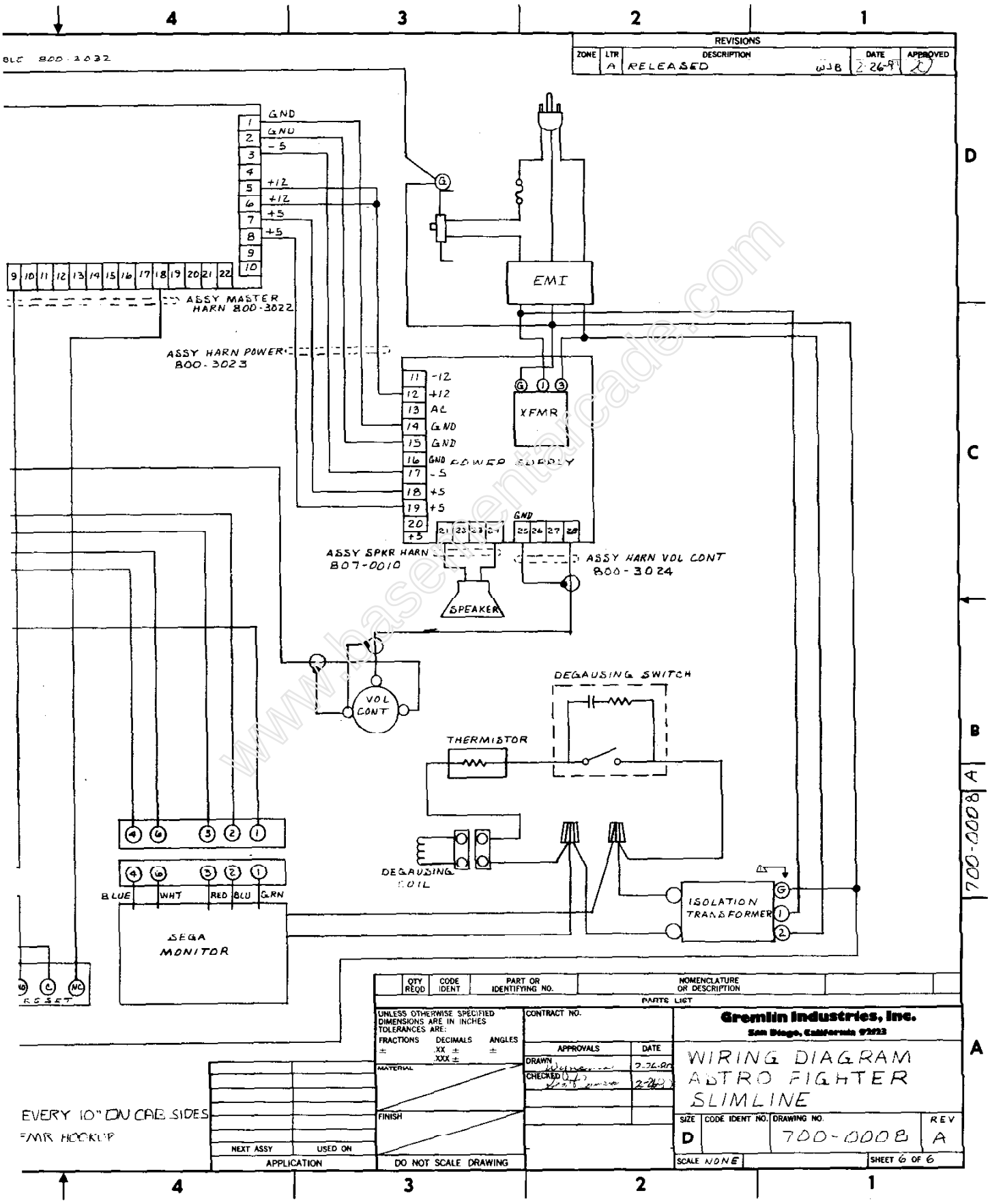
REVISIONS
ZONE | LTR | DESCRIPTION | DATE | APPROVED
A | RELEASED | WJB | 2-26-91
BLC 800-3032
GND
GND
-5
+12
+12
+5
+5
ASSY MASTER HARN 800-3022
ASSY HARN POWER 800-3023
EMI
XFMR
-12
+12
AC
GND
GND
GND POWER SUPPLY
-5
+5
+5
GND
ASSY SPKR HARN 807-0010
ASSY HARN VOL CONT 800-3024
SPEAKER
VOL CONT
DEGAUSING SWITCH
THERMISTOR
DEGAUSING COIL
ISOLATION TRANSFORMER
BLUE
WHT
RED
BLU
GRN
SEGA MONITOR
QTY REQD | CODE IDENT | PART OR IDENTIFYING NO. | NOMENCLATURE OR DESCRIPTION
PARTS LIST
UNLESS OTHERWISE SPECIFIED DIMENSIONS ARE IN INCHES TOLERANCES ARE:
FRACTIONS ± DECIMALS .XX ± .XXX ± ANGLES ±
MATERIAL
FINISH
CONTRACT NO.
APPROVALS | DATE
DRAWN 2-26-90
CHECKED 2-26-90
Gremlin Industries, Inc.
San Diego, California 92123
WIRING DIAGRAM
ASTRO FIGHTER
SLIMLINE
SIZE D | CODE IDENT NO. | DRAWING NO. 700-0008 | REV A
SCALE NONE | SHEET 6 OF 6
NEXT ASSY | USED ON
APPLICATION
DO NOT SCALE DRAWING
EVERY 10" ON CAB SIDES
FMR HOOKUP
700-0008

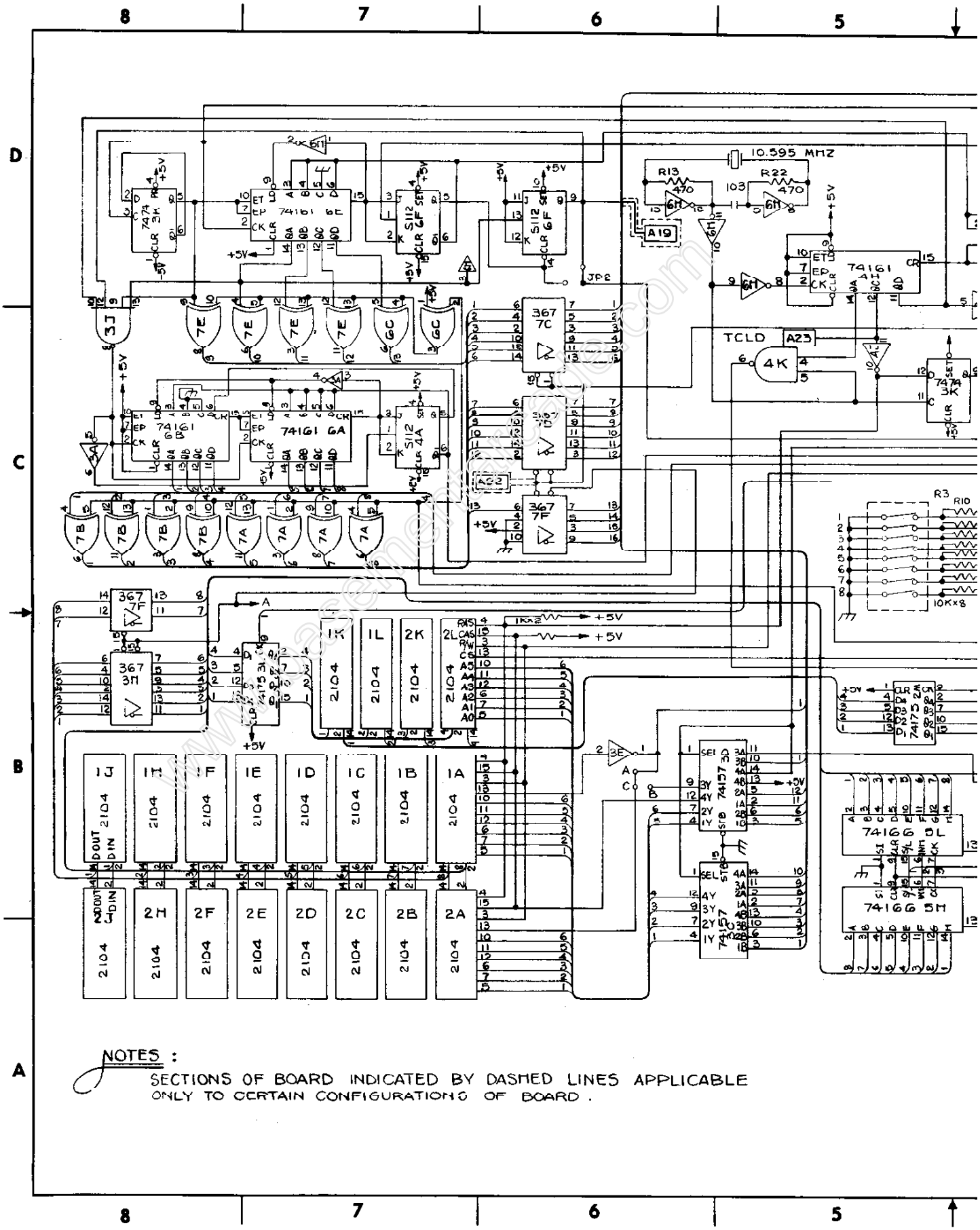

NOTES :

SECTIONS OF BOARD INDICATED BY DASHED LINES APPLICABLE ONLY TO CERTAIN CONFIGURATIONS OF BOARD .

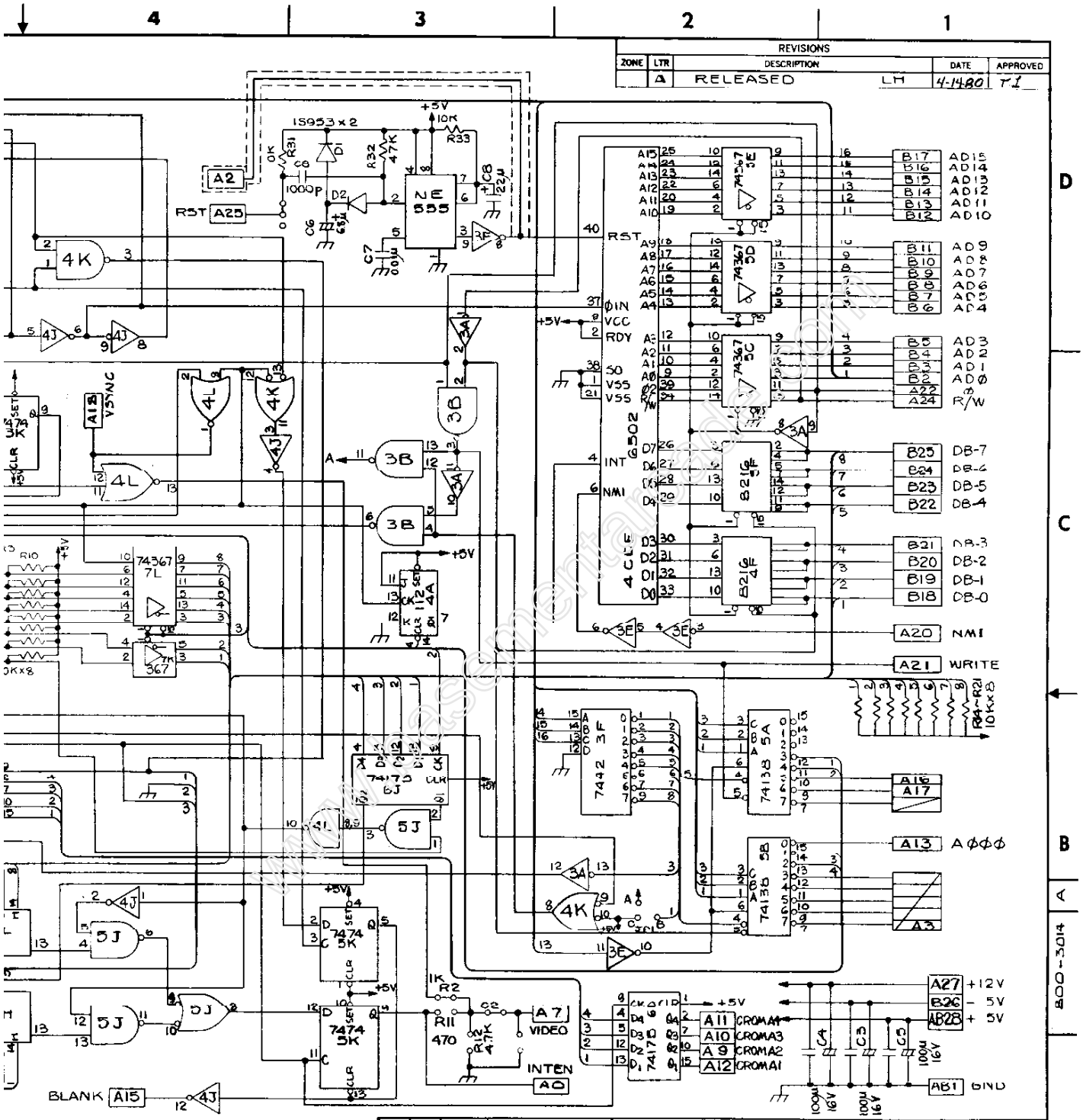

QTY REQD	CODE IDENT	PART OR IDENTIFYING NO.	NOMENCLATURE OR DESCRIPTION

PARTS LIST

UNLESS OTHERWISE SPECIFIED DIMENSIONS ARE IN INCHES
TOLERANCES ARE:
FRACTIONS ± DECIMALS .XX ± .XXX ± ANGLES ±

MATERIAL

FINISH NOTED

DO NOT SCALE DRAWING

CONTRACT NO.

APPROVALS	DATE
DRAWN LIEN VAN HO	4.14.80
CHECKED	4-14-80

Gremlin Industries, Inc.
San Diego, California 92123

ASSEMBLY CPU BOARD

SIZE	CODE IDENT NO.	DRAWING NO.	REV
D		800-3014	A

SCALE NONE SHEET 1 OF 1

NEXT ASSY	A/F USED ON
APPLICATION	

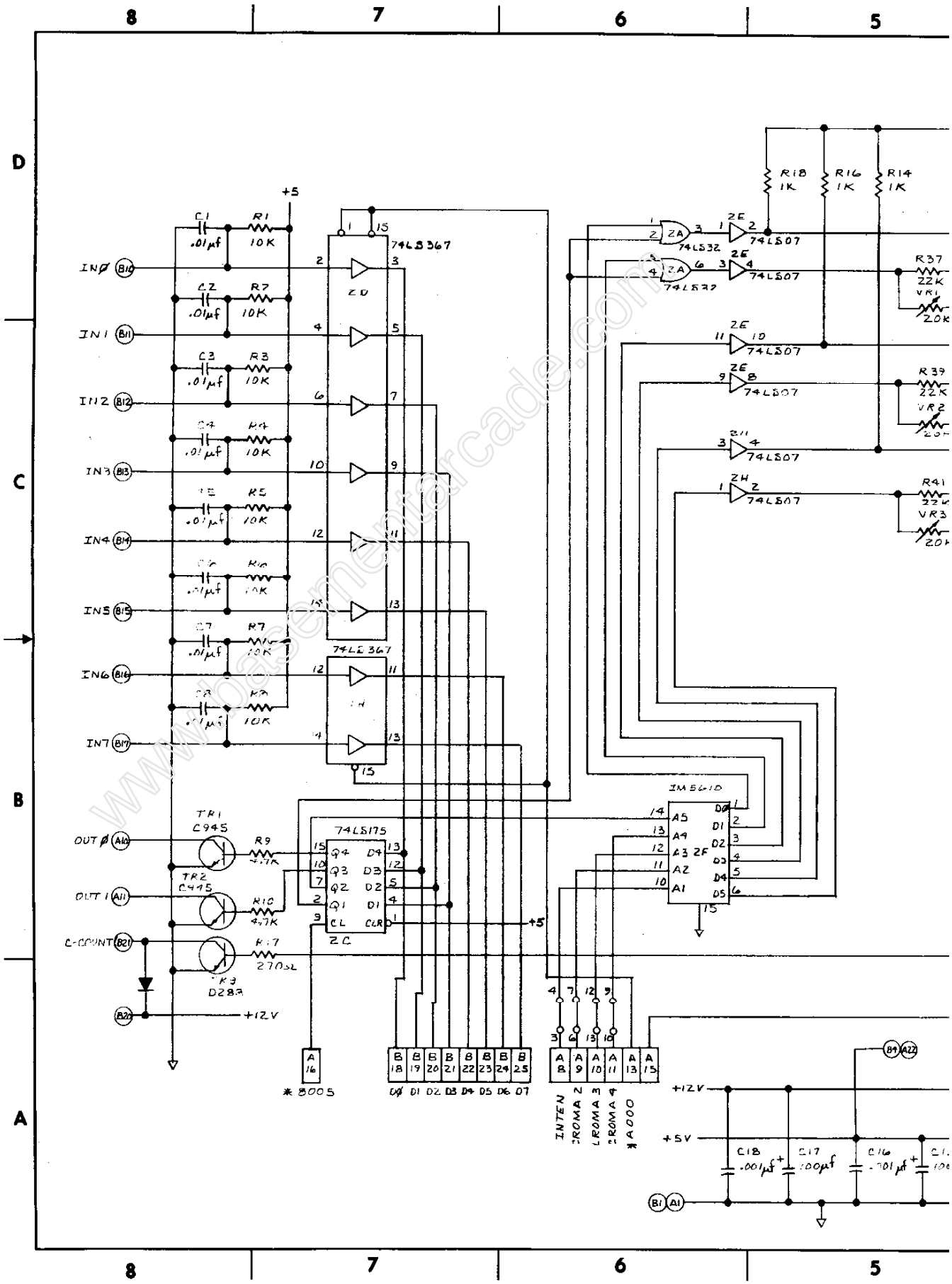

www.basementarcade.com

REVISIONS				
ZONE	LTR	DESCRIPTION	DATE	APPROVED
	A	RELEASED WJB	4-11-80	T.J.

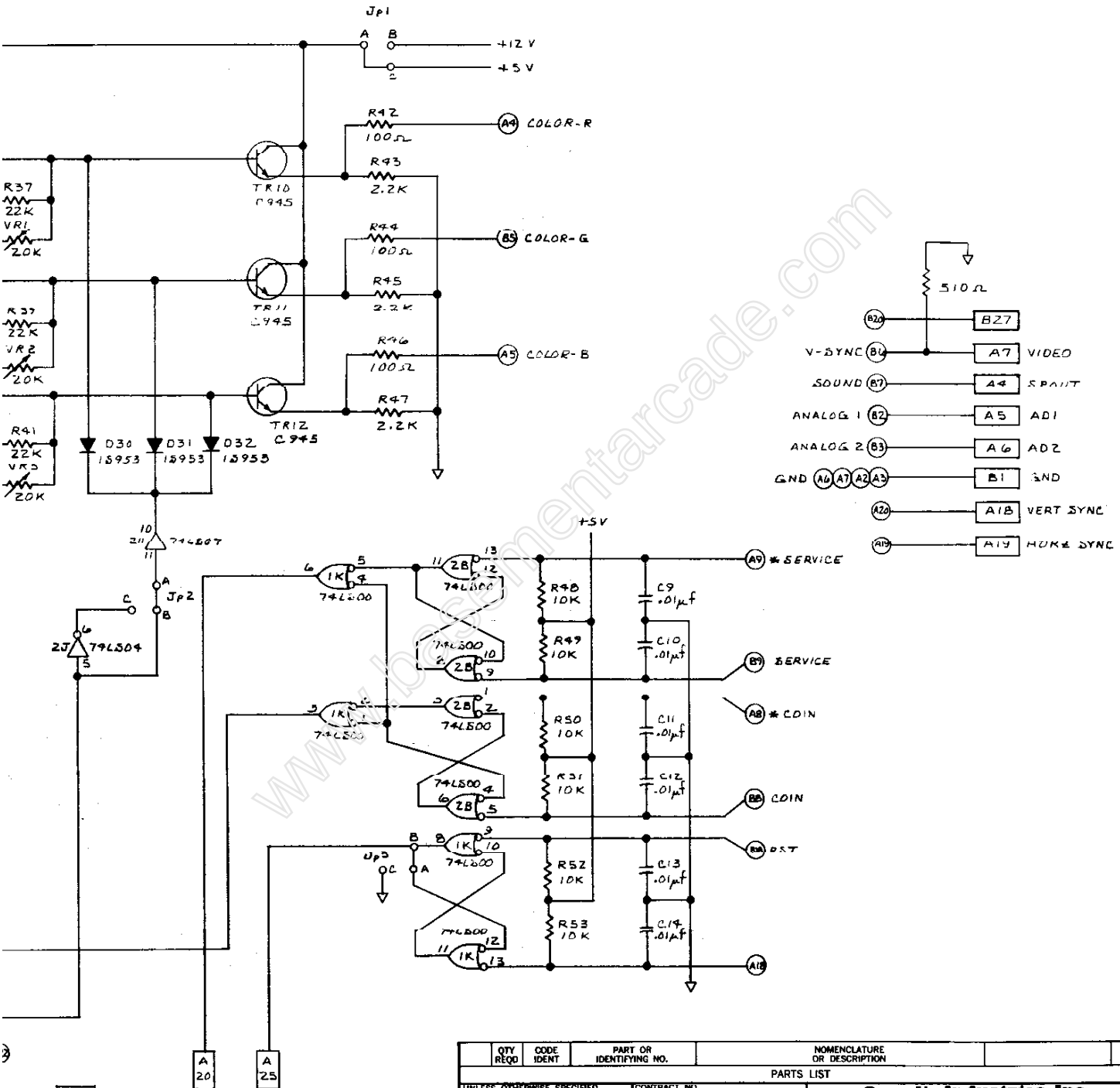

QTY REQD	CODE IDENT	PART OR IDENTIFYING NO.	NOMENCLATURE OR DESCRIPTION

PARTS LIST

UNLESS OTHERWISE SPECIFIED DIMENSIONS ARE IN INCHES TOLERANCES ARE:
FRACTIONS ± DECIMALS .XX ± .XXX ± ANGLES ±

MATERIAL

FINISH

NEXT ASSY | A/F USED ON

APPLICATION

DO NOT SCALE DRAWING

CONTRACT NO.

APPROVALS	DATE
DRAWN Wynne	3-29-80
CHECKED Lidwak	4-14-80

Gremlin Industries, Inc.
San Diego, California 92123

SCHEMATIC — I/O BOARD

SIZE	CODE IDENT NO.	DRAWING NO.	REV
D		800-3015	A

SCALE NONE | SHEET | OF |

800-3015 A

www.basementarcade.com

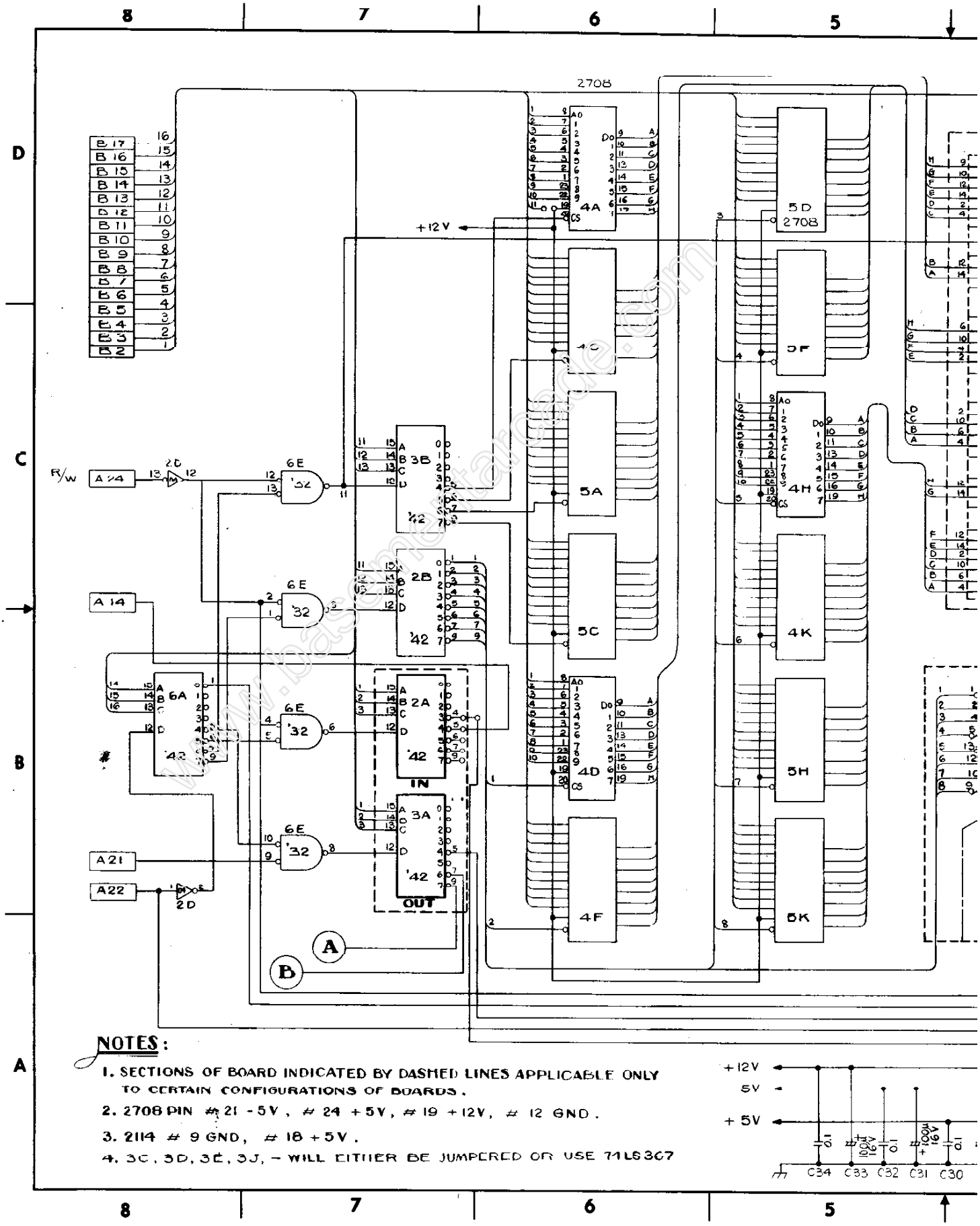

NOTES:

1. SECTIONS OF BOARD INDICATED BY DASHED LINES APPLICABLE ONLY TO CERTAIN CONFIGURATIONS OF BOARDS.
2. 2708 PIN #21 -5V, #24 +5V, #19 +12V, #12 GND.
3. 2114 #9 GND, #18 +5V.
4. 3C, 3D, 3E, 3J, – WILL EITHER BE JUMPERED OR USE 74LS367

www.pasmantarcade.com

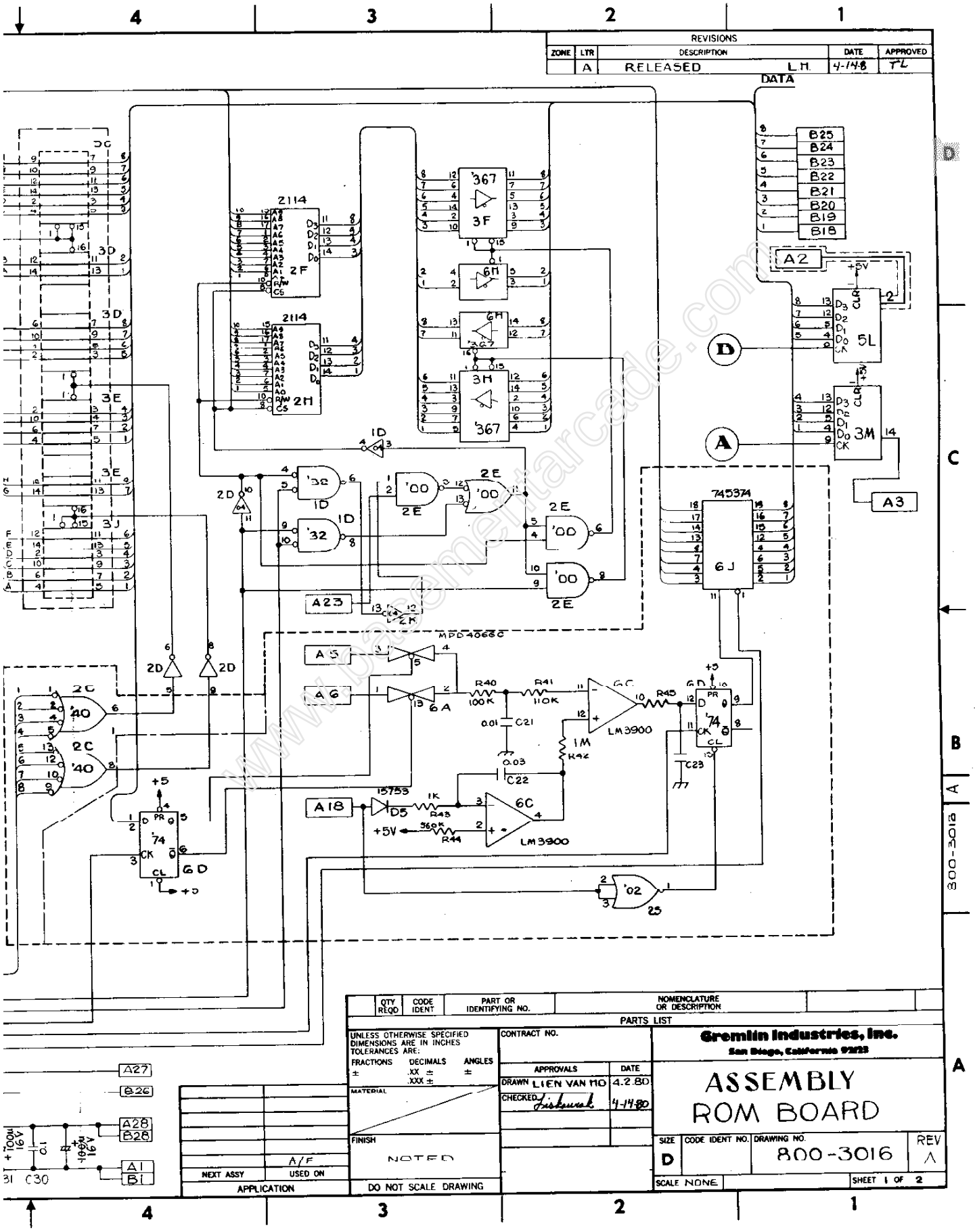
REVISIONS
ZONE | LTR | DESCRIPTION | DATE | APPROVED
A | RELEASED L.H. | 4-14-8 | TL
DATA
B25
B24
B23
B22
B21
B20
B19
B18
A2
+5V
5L
3M
A3
D
A
2114
2F
2H
'367
3F
6H
3H
1D
'32
'00
2E
745374
6J
A23
MPD4066C
A5
A6
6A
R40
100K
R41
110K
0.01
C21
0.03
C22
1M
R42
6C
LM3900
R45
'74
6D
C23
A18
15753
D5
1K
R43
+5V
360K
R44
'02
25
2C
'40
2D
3D
3E
3J
A27
B26
A28
B28
A1
B1
C30
10
16V
100µ
16V
NEXT ASSY
USED ON
A/F
APPLICATION
QTY REQD
CODE IDENT
PART OR IDENTIFYING NO.
NOMENCLATURE OR DESCRIPTION
PARTS LIST
UNLESS OTHERWISE SPECIFIED DIMENSIONS ARE IN INCHES TOLERANCES ARE:
FRACTIONS ±
DECIMALS .XX ± .XXX ±
ANGLES ±
MATERIAL
FINISH
NOTED
DO NOT SCALE DRAWING
CONTRACT NO.
APPROVALS
DATE
DRAWN LIEN VAN HO 4.2.80
CHECKED 4-14-80
Gremlin Industries, Inc.
San Diego, California 92123
ASSEMBLY
ROM BOARD
SIZE D
CODE IDENT NO.
DRAWING NO. 800-3016
REV A
SCALE NONE
SHEET 1 OF 2
800-3016

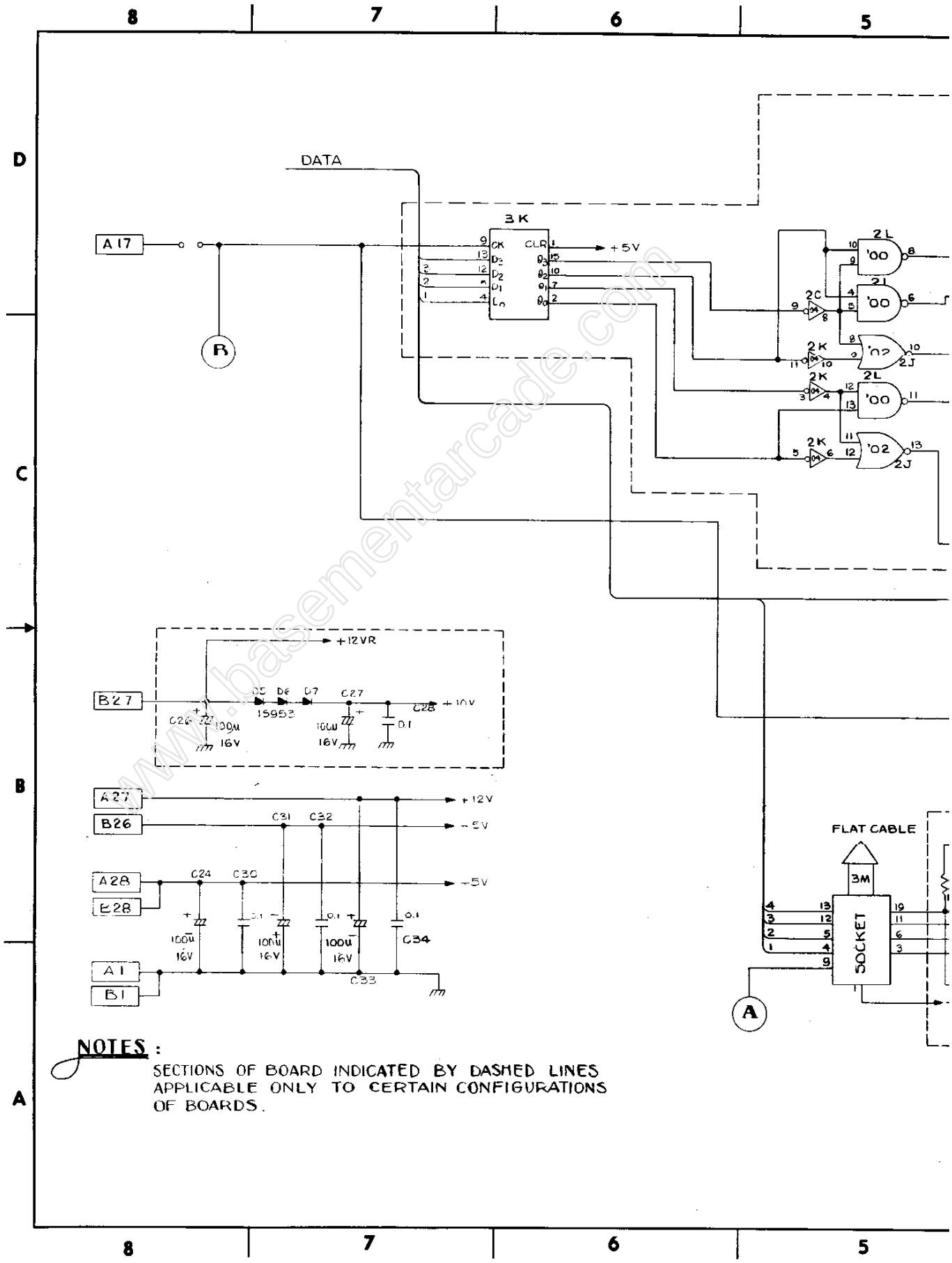

NOTES :

SECTIONS OF BOARD INDICATED BY DASHED LINES APPLICABLE ONLY TO CERTAIN CONFIGURATIONS OF BOARDS.

www.basementarcade.com

REVISIONS				
ZONE	LTR	DESCRIPTION	DATE	APPROVED
	A	RELEASED LH	4-14-80	TL

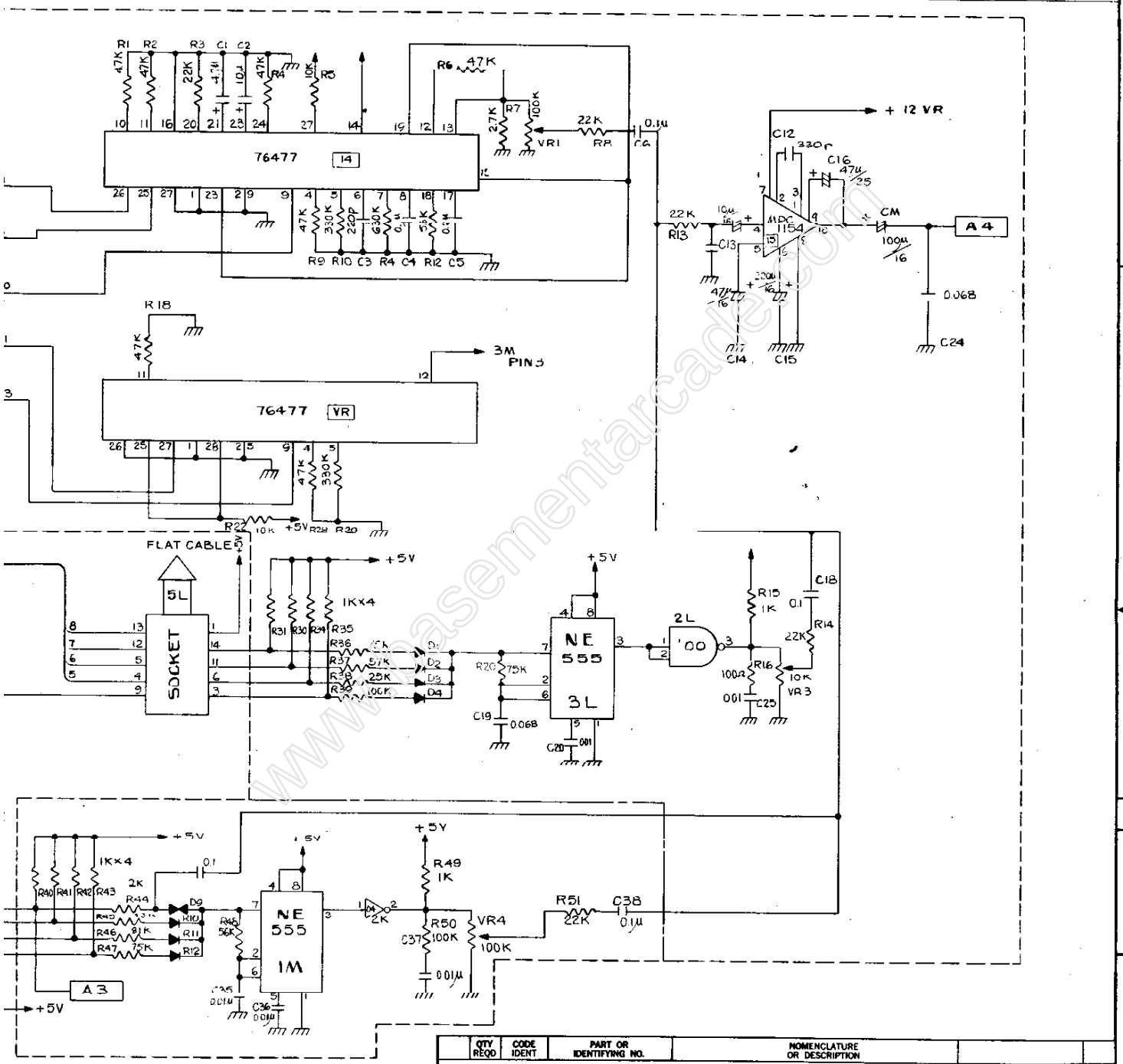

QTY REQD	CODE IDENT	PART OR IDENTIFYING NO.	NOMENCLATURE OR DESCRIPTION

PARTS LIST

UNLESS OTHERWISE SPECIFIED DIMENSIONS ARE IN INCHES
TOLERANCES ARE:
FRACTIONS ± DECIMALS .XX ± .XXX ± ANGLES ±

MATERIAL

FINISH NOTED

DO NOT SCALE DRAWING

CONTRACT NO.

APPROVALS	DATE
DRAWN LIEN VAN HO	4-8-80
CHECKED Lukowski	4-14-80

Gremlin Industries, Inc.
San Diego, California 92123

ASSEMBLY ROM BOARD

SIZE	CODE IDENT NO.	DRAWING NO.	REV
D		800-3016	A

SCALE NONE SHEET 2 OF 2

NEXT ASSY	USED ON
	A/F

APPLICATION

www.basementarcade.com

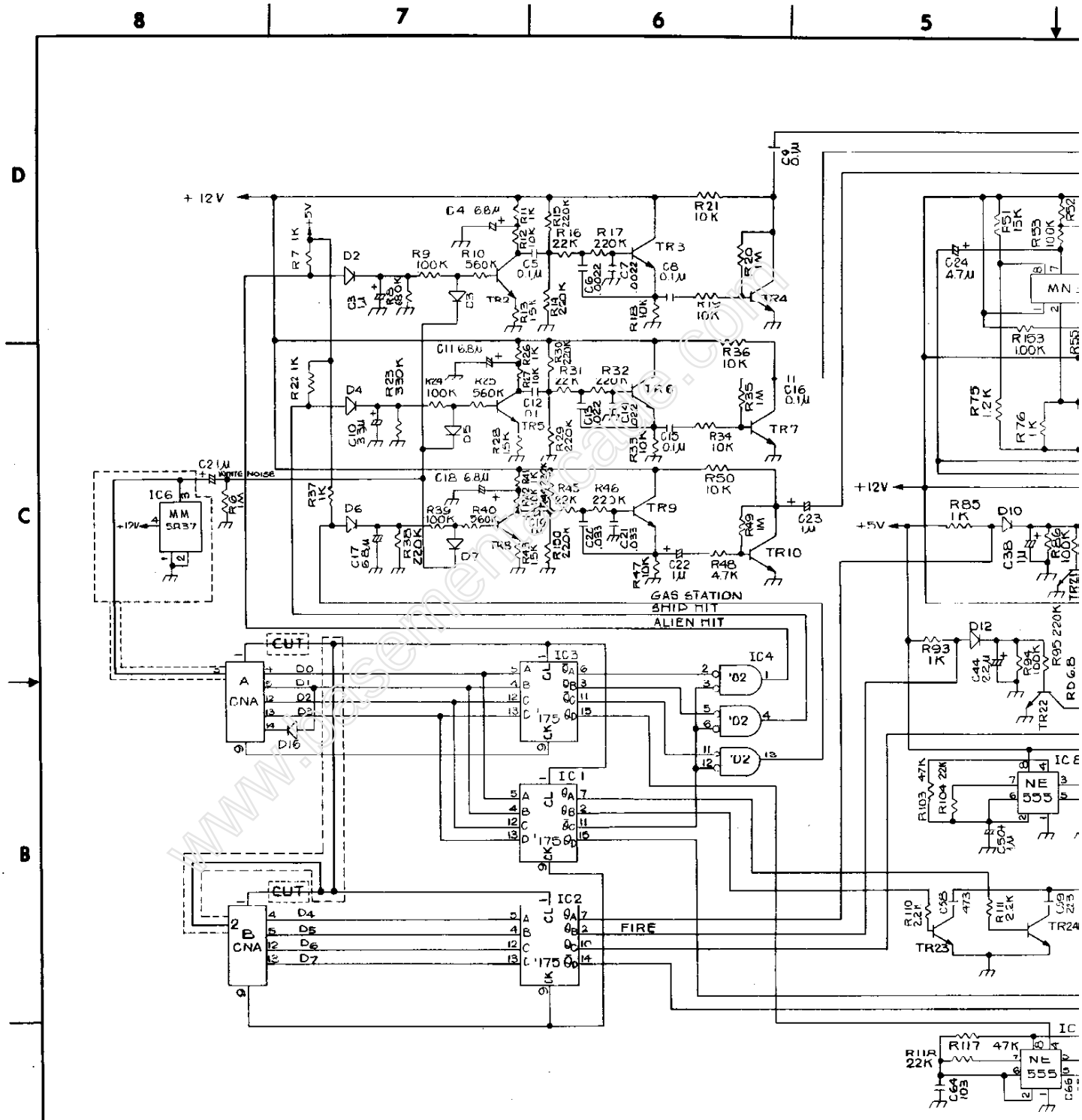

NOTES:

SECTIONS OF BOARD INDICATED BY DASHED LINES APPLICABLE ONLY TO CERTAIN CONFIGURATIONS OF BOARDS.

www.basementarcade.com

REVISIONS				
ZONE	LTR	DESCRIPTION	DATE	APPROVED
	A	RELEASED	4-14-80	T.L.

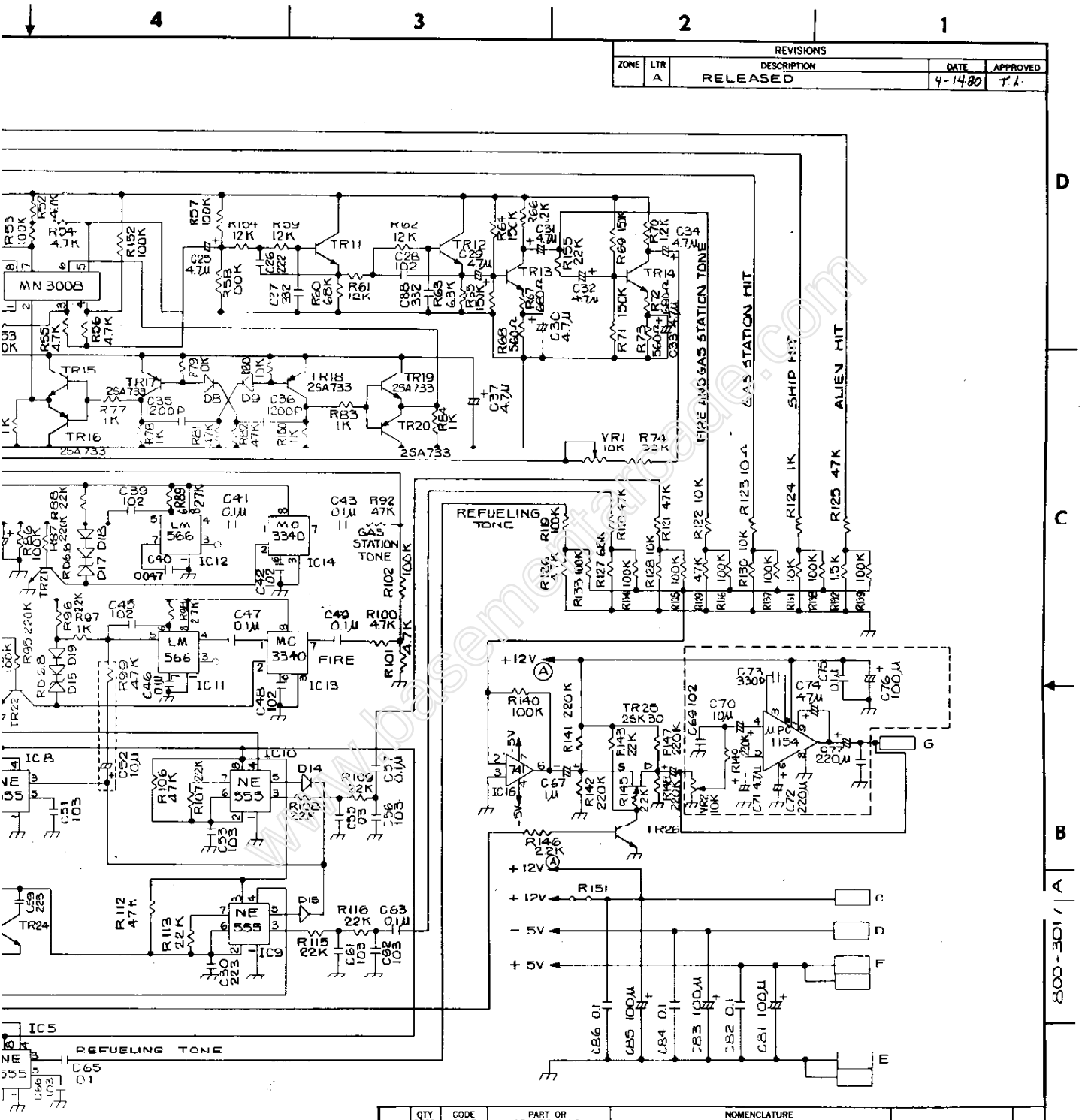

QTY REQD	CODE IDENT	PART OR IDENTIFYING NO.	NOMENCLATURE OR DESCRIPTION

PARTS LIST

UNLESS OTHERWISE SPECIFIED DIMENSIONS ARE IN INCHES
TOLERANCES ARE:
FRACTIONS ± DECIMALS .XX ± .XXX ± ANGLES ±

MATERIAL

FINISH NOTED

DO NOT SCALE DRAWING

CONTRACT NO.

APPROVALS		DATE
DRAWN	LIEN VAN HO	3.24.80
CHECKED	[illegible]	4-14-80

Gremlin Industries, Inc.
San Diego, California 92123

SCHEMATIC AUDIO BOARD

SIZE	CODE IDENT NO.	DRAWING NO.	REV
D		800-3017	A

SCALE NONE SHEET 1 OF 1

NEXT ASSY	USED ON
	A/F

APPLICATION

800-3017 A

www.basementarcade.com

www.basementarcade.com