Thank You for downloading this manual. I hope it helps you resolve any issues you have had with your game.

This manual was purchased, and scanned by Basement Arcade Associates, www.basementarcade.com and is offered for FREE download at our site.

This PDF is NOT to be distributed on any collection CD / DVD, nor is to be linked to via any other internet site without permission from us. Likewise it is not to be distributed from any other site without our permission.

Abiding by these requests, will insure the continuing support of new manuals added to our site.

All original copyrights held by their original owners, This PDF copyrighted Basement Arcade Associates.

-=Mark=-

www.basementarcade.com

ROMSTAR™ INC.

ARKANOID™

Instruction Manual

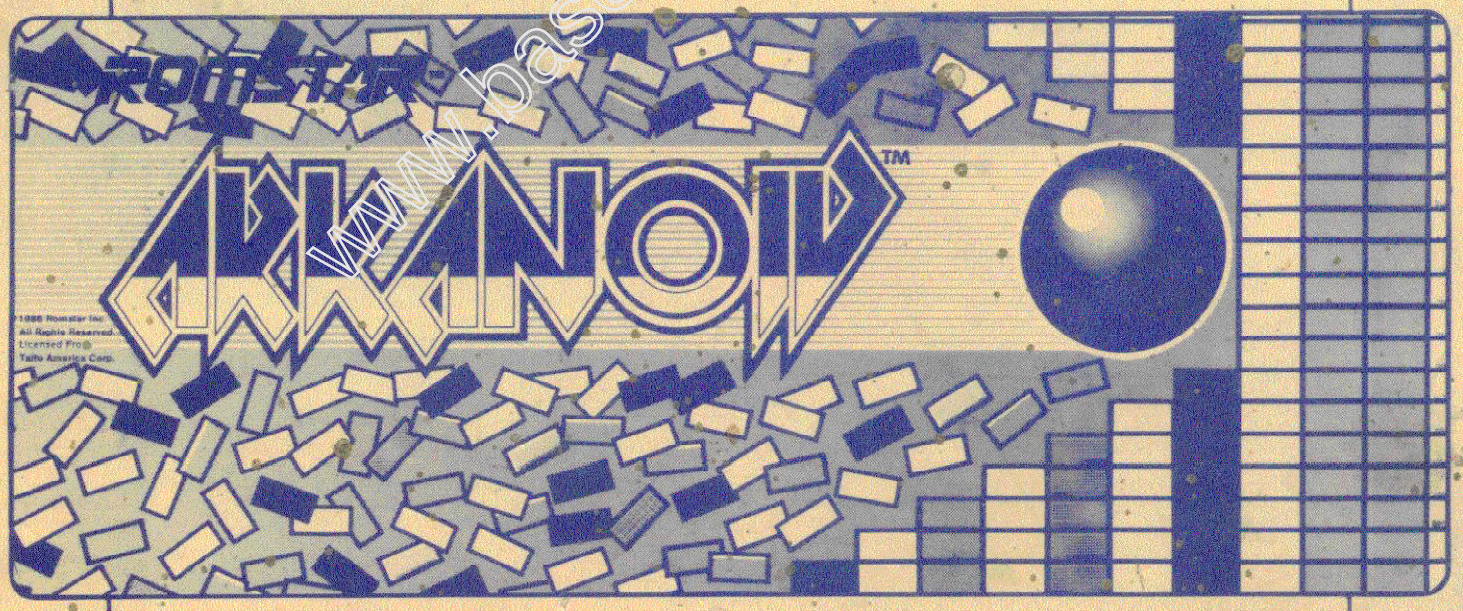

www.basementarcade.com

Romstar, Inc.
3043 Kashiwa Street, Torrance, CA 90505
Phone (213) 539-2744 Fax (213) 539-3626 Telex 182426

Licensed From TAITO™
All Rights Reserved ©1986

Before You Get Started . . . Stop!

1. Does your **new game** package include all listed parts? (Is it complete?)
2. Is the game you have chosen to transform able to supply all the required voltages for the **new game**?
   Note: Some games, (i.e. Ms. Pac Man, Galaxian, etc.) regulate their voltages on the main P.C.B. This makes the existing power supply inefficient. These games will require a change in power supply for your **new game**. Many game supply houses can offer you a switching regulated power supply for a relatively low cost.
3. Is the monitor configuration compatible? In most games it is rather difficult to change the monitor from a vertical mount to a horizontal mount. We recommend you choose a game cabinet with the same mount as your **new game** requires.
4. Do you have the necessary tools? (See the recommended tool list)

www.basementarcade.com

Caution

F.C.C. Regulation Compliance

The P.C. board cage supplied with this new game kit must be utilized and terminated to ground at the time of installation.

This is to avoid radio frequency radiation and comply with the limits for a class "A" computing device pursuant to sub-part "J" of part 15 of F.C.C. rules, which are designed to provide reasonable protection against interference when operated in a commercial environment.

Operation of this equipment in a residential area is likely to cause interference — in which case, the user at his own expense, will be required to take whatever measures may be required to correct the interference.

Metalized FCC compliance label **must** be attached and visible on the outside of the cabinet (rear) upon completion of installation.

Installing and Servicing Your

ARKANOID

www.basementarcade.com

New Game Package

Table of Contents

New Game Package Contents 2

Power and Monitor Requirements 2

Recommended Tools and Supplies 3

Game Operation 5

Installation Procedures 6

Control Diagrams 12

Dip Switch Tables ..... outside back cover

Main Harness Connections ..... outside back cover

Schematics ..... insert

ARKANOID

NEW GAME PACKAGE CONTENTS

1 Main Printed Circuit Board (PCB)	1 Marquee
1 PCB Cage (FCC Required)	1 Control Panel Overlay
1 Set Legs, Bolts, & Spacers	1 Plex Control Cover
1 Connecting Wire Harness	1 Set Side Graphics
1 Control Assy.	1 Set Play Instructions & Function Labels
4 Player Button Assemblies	1 Service and Installation Manual

Note: Replacement accessories available through your exclusive **Romstar** distributor.

www.basementarcade.com

POWER REQUIREMENTS		MONITOR REQUIREMENTS
+5 VDC	7 amp minimum	Vertical Mount Raster Scan
+12 VDC	1 amp minimum	Negative Composite Sync

Recommended Tools and Supplies

ROMSTAR **new game** package.
Phillips and Slot Screwdrivers
Socket Set
Enthusiastic Attitude
Wire Cutters and Strippers
Pliers or Channel Locks
Planning and Careful Thought
Electric Drill
3/32" • 1/4" • 7/16" Drill Bits
1/4" Plex Bit
1-3/16" Chassis or Sheet Metal Punch
1 1/4" Plex Hole Saw
Glass of Water and a Snack
Small File
Razor Knife and Sharp Blades
Straight Edge
Patience
Common Sense
Painting Supplies (if you do your own painting)
  Paint Brush and Paint (don't forget the primer)
  Paint Roller and Pan
  Sand Paper
  Putty Knife and Wood Putty
A Good Night's Sleep
Staple Gun and Staples
Soldering Iron and 60/40 **Resin Core** Solder
Vacuum Cleaner
Assorted Fastening Hardware
Shrink Tubing: 3/32" • 1/8" • 3/16"
Masking Tape
3 1/2" OR 4" Wire Ties
Spray Window Cleaner and Rags (baby diapers work GREAT!)

www.basementarcade.com

Dip Switch Tables

Optimize Your Profits

Thorough Research shows that two and a half minute games both satisfy players and also keep the quarters flowing.

If games aren't running about two and a half minutes long, then collections probably aren't at their peak. You'll want to tailor your game to your location. The trick is to adjust a few DIP switches. (See the chart in this book.) It's easy!

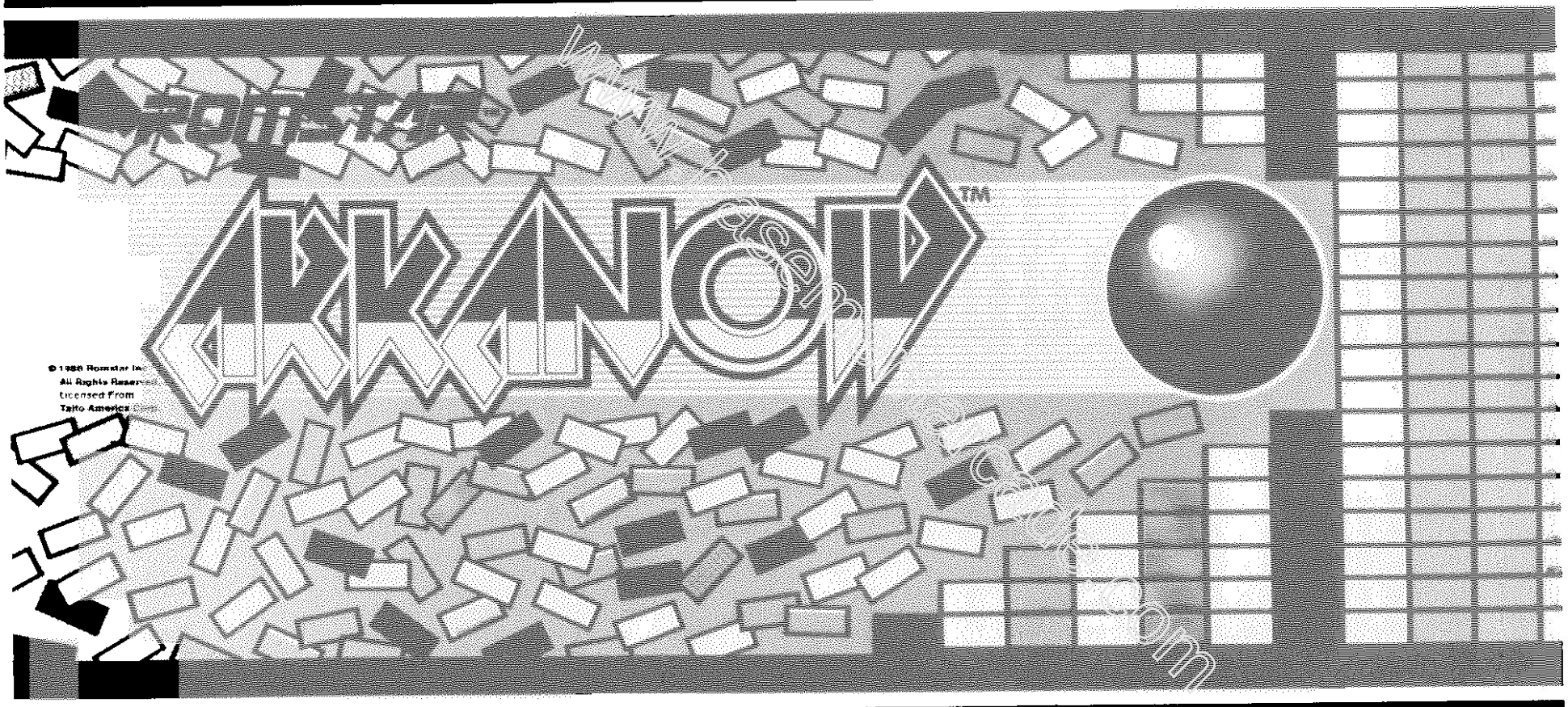
ROMSTAR
ARKANOID™
© 1988 Romstar Inc.
All Rights Reserved
Licensed From
Taito America

CATCH CAPSULES AND REINFORCE THE VAUS!!

SLOW

SLOWS DOWN THE ENERGY BALL.

CATCH

CATCHES THE ENERGY BALL AND SHOOTS IT WHEN YOU WANT TO.

EXPAND

EXPANDS THE VAUS.

DISRUPT

SPLITS THE ENERGY BALL INTO THREE PARTICLES.

LASER

ENABLES THE VAUS TO FIRE LASER BEAMS.

BREAK

ALLOWS PLAYER TO MOVE TO NEXT PLAYFIELD.

PLAYER

GAINS AN ADDITIONAL VAUS.

www.basementarcade.com

Installation Procedures

Something To Think About

Your final product will be a **new game**.

You have made a wise decision to transform a game that has seen better days in the all important cash box into a **new game**. This is by far the most cost effective alternative to maximize the return of your initial investment. All you provide is the cabinet with a power supply and a monitor. Oh yes, you will need a touch of elbow grease. And that's it! We provide the rest. The end result is . . . a **new game** at a very low cost.

Fact: Spend a little time on the cabinet's appearance (i.e. marquee, control panel and cabinet graphics). With a little paint, some wood putty and new lights, you will raise the profits of any game. . .especially with the introduction of a **new game** package.

The **new game** look should always apply to the inside of your game as well as the outside. A few wire ties and shrink tubing on your harness; some fastening hardware on your subassemblies and a sweep with the ol' vacuum cleaner will ensure that unnecessary *glitches* do not occur.

Remember: You are creating a **new game**.

If you have any questions or just need some advice on any of your **new game** transformations, don't hesitate in giving a member of our technical staff a call.

www.basementarcade.com

Let's Get Our Hands Dirty

Preparing the Original Game for the New Game

Remove the following:

1. Main logic board(s)
2. Control panel
3. Monitor plexiglass
4. Monitor Bezel
5. Marquee
6. Graphics

I would recommend painting your cabinet to give it a fresh new look. (If it is geographically inconvenient to make use of our facilities, you may consider having an auto body shop take care of your painting needs.)

If your cabinet has wood grain sides; remove old graphics and adhesive (adhesive may be removed with **lacquer** thinner.

If you intend to use your original plexiglass, be sure it is in mint condition or it should be replaced.

Thoroughly clean out your cabinet.

Time To Install Your New Goodies

Before You Start. . . Remember DO NOT Do This Work With The Power On!

Logic P.C.B. Cage

Mount the logic cage securely (away from power supply).

A Mark and drill pilot holes (3/32").

B Place the logic cage (bottom) over the holes and secure it with the supplied wood screws.

C Install the P.C.B. into the logic cage. Use feet and spacers supplied and adjust them so that the screws will go through the slots int he cage bottom.
Note: Leave the cage cover off until you have attached the entire wire harness and have tested the game for proper operation.

Wire Harness

Attach the wire harness connector to the main logic board. **CAUTION:** Sometimes the connector is hot keyed and it is very easy to install it reversed on the logic board. Even if it is keyed, always **triple check** to be sure the wire inputs were connected correctly to the connector and the connector to the logic board.

Connecting the Wire Harness to the Existing Wires

When you hook up the control panel, power supply, monitor or other subassemblies that remain in the game cabinet to your new wire harness, try and use their existing secondary connectors.

1. Cut the original wire approximately three inches from the original connector. Strip off about one half inch of insulation.
2. Solder the new wire designated for that position to the original wire you just stripped.

Warning: DO NOT JUST TIE THE WIRES TOGETHER. THIS CAN CAUSE NAGGING INTERMITTENT PROBLEMS THROUGH LOOSE CONNECTIONS OR OXIDATION OR BOTH. **Always take the time to do it right.**

3. Melt shrink tubing around all your in-line wire connections. Do not use electrical tape. Tape could unravel over a period of time due to the cabinet heat and cause you a great deal of trouble.
4. Use wire tie wraps, and secure the cable to the cabinet whenever it seems necessary. Remember this is a **new game** , not a sloppy conversion.

Power Wires

1. Connect the wires that are designated for your power supply. You will need a supply of +5V, +12V & ground. Your **new game** package may not require all of the voltages that were used in the original game. Tie off any unused wires.
2. You will notice that you probably have more than one wire for each voltage. It is a good idea to use all wires supplied (double up if it is necessary). This will help to ensure that you don't overload the edge connector pins and cause them to "burn".

www.basementarcade.com

Monitor Wires

You will be connecting the wires designated for the RED, GREEN & BLUE video guns along with the SYNC & GROUND wires.

NOTE . . . CONCERNING SYNC:

Your **new game** only calls for one sync wire connection, this is called **composite sync** (horizontal and vertical tied together). This composite sync is also **negative**. Most monitors have supply positions for both negative and positive sync. You can check your monitor manual or call our technical department for assistance.

Speaker Wires

Find the two wires that are designated for the speaker and hook 'em on up.

Coin Door Wires

1. Connect the designated wires to the coin switches and meter.
2. You can connect your door lamps to the unused −5V power supply. Some games have separate power outputs for the coin door lamps.
3. Be sure to clean and lubricate your old coin mechanisms. Keep the money coming in.

GUESS WHAT?

You are almost done with the electrical connections of your **new game**. All you have left is the control panel wiring. But we are going to hold off on that for right now. We have a few other things we need to do first. So why don't you go ahead and get yourself a drink of water and stretch your legs. When you return, we can take a fresh look at your progress and then move forward.

www.basementarcade.com

Smoke Test

What Test?

Don't worry. All this means is that you are ready to apply power to the system for the first time and you pray that there will be no smoke from a simple oversight.

You are just about ready to power up the logic board. But first we need to recheck your work.

1. Carefully inspect the game for loose power wires, exposed connections and extra fastening hardware.
2. Make sure the logic board, board cage, monitor and power supply are securely fastened in place.
3. **Double check** the connectors to be sure they are wired and connected properly.
4. Set the dip switches on the logic board to the factory recommendations. (Refer to page 5.) Also, be sure you set the dip switches for "DEMO WITH SOUND". This will enable you to hear as well as see that your new P.C.B. is functional.

Time to Apply Power:

1. Look and smell for smoke. (TURN OFF IMMEDIATELY IF ANY IS NOTICED)
2. Listen for game sounds.
   If after one minute you have not heard any sounds:
   A) Check for proper dip switch settings.
   B) Adjust volume control and check speaker connections.
   C) Check the +12V power supply to the logic board.
   NOTE: If you do get sounds, but they are a little fuzzy, switch the wires around on the speaker.
3. How is the monitor image?
   A) **Is the picture in sync?**
   If your picture has the top and bottom halves of the screen reversed and it will not stop rolling, change your sync polarity on the monitor. (Positive to negative).
   If your monitor does not have dual polarity positions for sync, then you will need to reverse the sync yourself by installing a simple one I.C. circuit between the logic board and the monitor. (The following illustration shows a hookup for both **composite** and **separate** syncs.

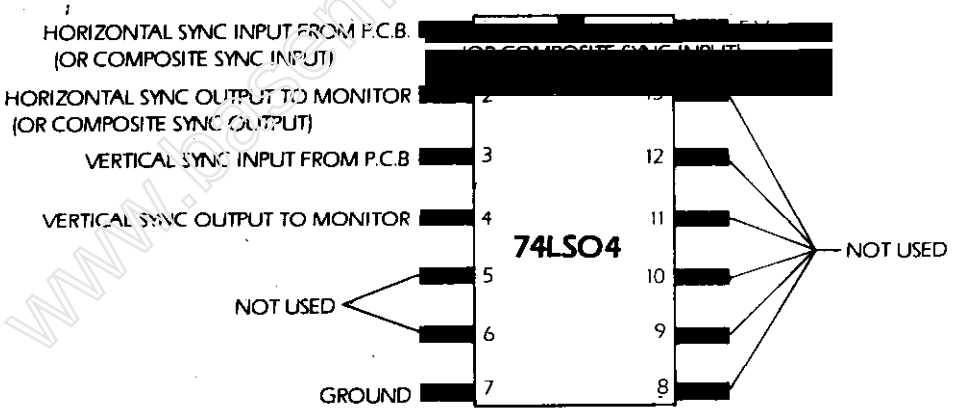

   B) **Now how's your picture?**
   - It it centered?
   - Is it too bright or dim?
   - Is it in focus?

   Check your monitor manual for these adjustments. If your screen looks "off", then your **new game** transformation may have been in vain. So let's take the time to make the monitor look great.

   C) **Is the picture upside-down?**
   Dip switch 7 should solve your problems.

www.basementarcade.com

Control Panel Assembly

1. Remove the buttons, joysticks and wire harness and put them aside fro now. Do not remove the original panel overlay until the new holes have been drilled.
2. Mark positions on the panel for the new holes.
   ROMSTAR supplies a clear 1/8" thick piece of plexiglass with every **new game** package to cover the control panel. We feel that your **new game** investment is well worth protecting. . . and the control panel is the first place to show wear and tear.
   - You will need to cut this piece to size. Use the control panel as a template.
   - Use a razor knife to score the plexiglass **deeply**. Then use a pair of pliers to break away the extra plexiglass.
3. Now drill the holes in your panel that you have marked off for the *buttons, joystick* and *bolts.*
   Hint: For best results, use a chassis or sheet metal punch for button holes.
4. Drill the same holes on your plexiglass panel protector. Once again use your panel as a template.
   Hint: To avoid chipping,while you are drilling the holes, place the plexiglass securely on a soft wood surface and use a plexiglass drill bit and hole cutter.
5. The holes are now all cut. Smooth them out on your panel and plexiglass with a fine toothed file.
6. Remove the original graphics overlay from the panel. Clean up the panel and install your **ROMSTAR** graphics.
   Make It Easier: Peel the top half of the protective backing off of your graphics. Start from the center and smooth out your overlay. Make sure you have about an inch extra coming off the top. *No bubbles please.* Now peel off the bottom half and do the same as you did for the top.
7. Adhere the instruction and function labels.
8. Install the Plex Control Cover over your completed **new game** panel.
   Note: Be sure to bolt the plexiglass securely to the panel.
9. Mount the control and the buttons to the panel and wire them up. (Use the existing Panel wiring if possible)
   NOTE : See page 12 for control mounting instruction

Marquee Installation

Using the original marquee as a template, Center your **new game** marquee graphics and score the new marquee deeply to fit the cabinet. Break off the excess with pliers.

Be sure the light behind the marquee works. Everything should **always work** on a new game.

Take your time ... Don't forget this is going to be a **new game.**

www.arcadeamericacade.com

Side Graphic Installation

1. Be sure sides of game are clean and free of old adhesive, dust, etc.
2. Mark position of decal with eraseable pen or pencil (centered on upper half of cabinet).
3. Peel off top 1/4 of decal backing and apply to cabinet with a smoothing motion (use a soft rag). Continue peeling off backing and smoothing.
4. Remove any small bubbles with a pin or razor blade (pop them!)

Finishing Touches

1. Check the game inside and out for any imperfections. Secure any loose wiring or fastening hardware.
2. Make sure the coin door is tight and the coin mechs are well adjusted. A game is no good to anybody if you can't get a coin into it.
3. Once again go over every step of this **new game** transformation in your mind. Be sure everything is correct and to your liking.
4. Power up the game.
   A. Check all the coin switches. (Does the coin meter work?)
   B. Play your **new game** .
   - Are all the player controls working?
   - Are the game sounds present?
   - Is the volume level proper?
   - Are the dip switches set properly?

Well, that's about it. Good Luck.

www.basementarcade.com

OPTO-COUPLER PCB

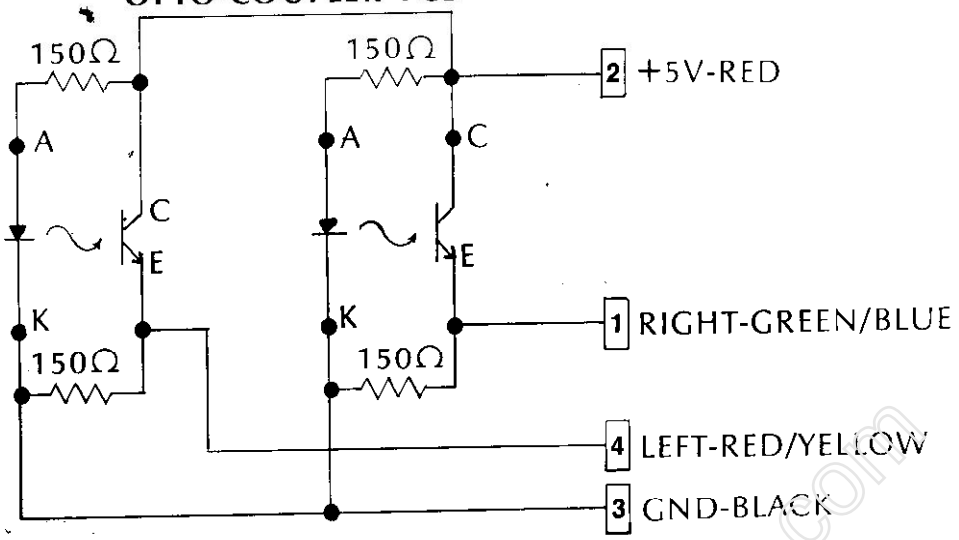

CONTROL PANEL LAYOUT

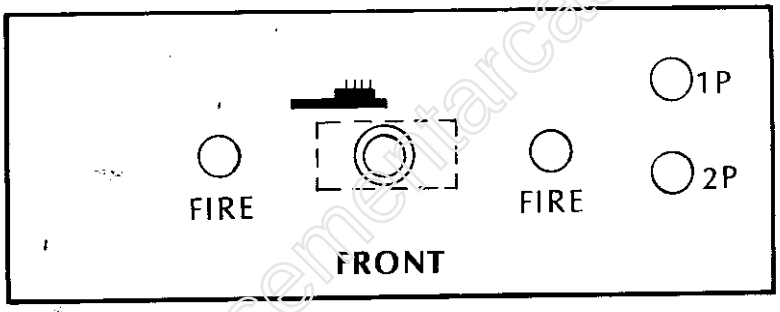

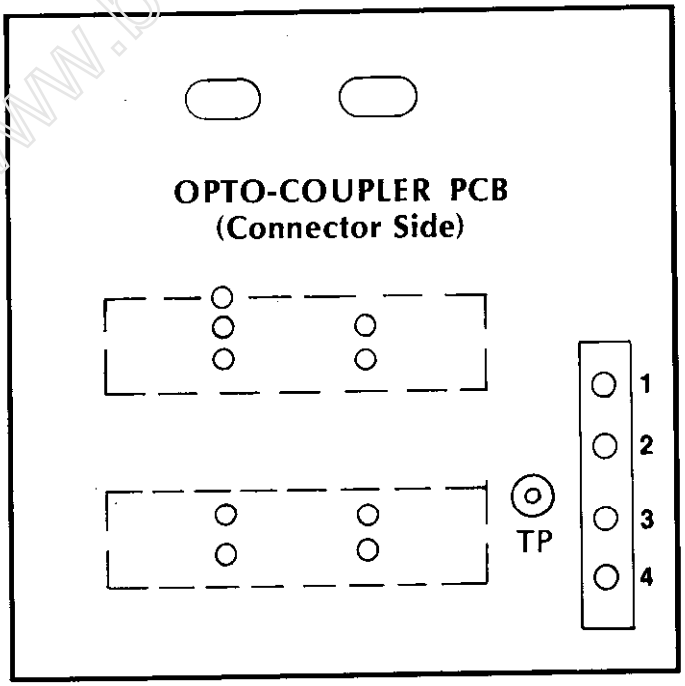

TO REMOVE KNOB & SHAFT ASSEMBLY - REMOVE NUT, SPROCKET, & E-CLIP FROM MAIN SHAFT.

NOTE : USE CONTROL ASSY. AS A TEMPLATE FOR MOUNTING HOLES ON CONTROL PANEL.

www.basementarcade.com

WARRANTY, REPAIR AND RETURN POLICY

1. *45 DAY FULL PARTS WARRANTY.
2. *60 DAY FULL ELECTRONICS WARRANTY (SEE RMA BELOW).
3. MINIMUM $40.00 SERVICE CHARGE FOR ALL NON-WARRANTY REPAIRS OR RETURNS.
4. **ANY** UNAUTHORIZED NON-FACTORY REPAIR OR ATTEMPTED REPAIR VOIDS WARRANTY.

(*ALL WARRANTY PERIODS BEGIN ON THE DATE OF PURCHASE FROM ROMSTAR)

RETURN MERCHANDISE AUTHORIZATION — (RMA)

1. ALL RETURNED MERCHANDISE MUST HAVE AN RMA NUMBER CLEARLY VISIBLE ON THE OUTSIDE OF THE PACKAGE.
2. ALL RMA NUMBERS MUST BE OBTAINED FROM ROMSTAR BY AN AUTHORIZED ROMSTAR DISTRIBUTOR. (PLEASE HAVE ROMSTAR SERIAL NUMBER AVAILABLE WHEN CALLING FOR AN RMA #).
3. **ALL** PC BOARDS RETURNED TO ROMSTAR WITHOUT AN RMA NUMBER WILL BE SUBJECT TO A MINIMUM CHARGE OF $40.00.
4. ROMSTAR WILL SHIP ADVANCE REPLACEMENT BOARDS TO DISTRIBUTORS OR AT DISTRIBUTORS REQUEST, DROP-SHIP BOARDS DIRECT TO THE OPERATOR.
5. ADVANCE REPLACEMENT BOARDS WILL BE BILLED TO THE DISTRIBUTOR UNTIL RECEIPT OF A RETURNED BOARD BY ROMSTAR AT WHICH TIME A CREDIT WILL BE ISSUED.
6. ALL REPAIRS AND/OR REPLACEMENTS WILL BE SHIPPED BY ROMSTAR WITHIN 24 HOURS OF RECEIPT OR REQUEST. (SUBJECT TO AVAILABILITY OF BOARDS).
7. FOR ANY ROMSTAR PRODUCT PURCHASED AFTER 3/1/86, A ROMSTAR WARRANTY CARD MUST BE ON FILE FOR EACH BOARD TO FACILITATE REPAIR & RETURN.

ANY QUESTIONS CONCERNING THESE POLICIES SHOULD BE DIRECTED TO DENNIS SABLE, TECHNICAL MANAGER OR SHAWN ZENKER, OPERATIONS OFFICER.

www.basementarcade.com