Thank You for downloading this manual. I hope it helps you resolve any issues you have had with your game.

This manual was purchased, and scanned by Basement Arcade Associates, www.basementarcade.com and is offered for FREE download at our site.

This PDF is NOT to be distributed on any collection CD / DVD, nor is to be linked to via any other internet site without permission from us. Likewise it is not to be distributed from any other site without our permission.

Abiding by these requests, will insure the continuing support of new manuals added to our site.

All original copyrights held by their original owners, This PDF copyrighted Basement Arcade Associates.

-=Mark=-

www.basementarcade.com

16-3012-101

Williams®

Instruction Manual

BUBBLES™

www.bacementarcade.com

ROM SUMMARY

ROM	PART NO.	DESCRIPTION	LOC.	BOARD
BUBBLES 1B	A-5343-10111-B	PROM, 4Kx8, BROWN LABEL	4E	ROM
BUBBLES 2B	A-5343-10112-B	PROM, 4Kx8, BROWN LABEL	4C	ROM
BUBBLES 3B	A-5343-10113-B	PROM, 4Kx8, BROWN LABEL	4A	ROM
BUBBLES 4B	A-5343-10114-B	PROM, 4Kx8, BROWN LABEL	5E	ROM
BUBBLES 5B	A-5343-10115-B	PROM, 4Kx8, BROWN LABEL	5C	ROM
BUBBLES 6B	A-5343-10116-B	PROM, 4Kx8, BROWN LABEL	5A	ROM
BUBBLES 7B	A-5343-10117-B	PROM, 4Kx8, BROWN LABEL	6E	ROM
BUBBLES 8B	A-5343-10118-B	PROM, 4Kx8, BROWN LABEL	6C	ROM
BUBBLES 9B	A-5343-10119-B	PROM, 4Kx8, BROWN LABEL	6A	ROM
BUBBLES 10B	A-5343-10120-B	PROM, 4Kx8, BROWN LABEL	7A	ROM
BUBBLES 11B	A-5343-10121-B	PROM, 4Kx8, BROWN LABEL	7C	ROM
BUBBLES 12B	A-5343-10122-B	PROM, 4Kx8, BROWN LABEL	7E	ROM
Special Chip 1	A-5410-09911	Special Chip	1F & 2F	ROM
Decoder ROM 4 (Horizontal)	A-5342-09694	PROM, 512x8	3C	CPU
Decoder ROM 6 (Vertical)	A-5342-09821	PROM, 512x8	3G	CPU
ROM 13 (Sound)	A-5343-10127	ROM, 4Kx8	IC12	SOUND

www.basementarcade.com

INSTRUCTION MANUAL FOR UPRIGHT AND TABLE GAMES

including . . .

- operation
- bookkeeping
- adjustment
- diagnostics
- parts

www.bassmanarcade.com

CONTENTS

• CHAPTER 1 Game Setup

Warnings & Notices 5
Examine Your Game 5
Location of Controls 6

• CHAPTER 2 Game Operation

Power Turn-On 8
Game Operation 8
Bookkeeping Totals 8
Game Adjustments 9
Definitions of Pricing Terms 11

• CHAPTER 3 Troubleshooting Procedures

Introduction 14
Power-Up Tests 15
+5VDC Power Supply Adjustments 15
Self-Diagnostics 15
Diagnostic Mode Tests 16
Sound Board Diagnostics 18
CMOS RAM Data Test Protocol 20

• CHAPTER 4 Parts

www.basementarcade.com

CHAPTER 1 Game Setup

Warnings & Notices

Examine Your Game

Location of Controls

www.basementarcade.com

Warnings & Notices

WARNING:

1. **FOR SAFETY AND RELIABILITY, WILLIAMS** does not recommend or authorize any substitute parts or modifications of WILLIAMS equipment.

2. **USE OF NON-WILLIAMS PARTS** and modifications of game circuitry may adversely affect game play, or may cause injuries.

3. **SUBSTITUTE PARTS, MODIFICATIONS AND GAME "CONVERSIONS"** may void FCC type-acceptance.

4. **SINCE THIS GAME IS PROTECTED** by Federal copyright, trademark and patent laws, so-called game "conversions" may be illegal under Federal law.

5. **THIS "CONVERSION" PRINCIPLE ALSO APPLIES** to unauthorized facsimiles of WILLIAMS equipment, logos, designs, publications, assemblies and games (or game features not deemed to be in the public domain), whether manufactured with WILLIAMS components or not.

RF INTERFERENCE NOTICE:

CABLE HARNESS PLACEMENTS AND GROUND STRAP ROUTING on this game have been designed to keep RF radiation and conduction within levels accepted by FCC regulations.

TO MAINTAIN THESE LEVELS, reposition harnesses and reconnect ground straps to their original placements if they should be disconnected during maintenance.

Examine Your Game

When you receive a new WILLIAMS game, examine it carefully before you power it up. Be sure it was delivered in good condition!

☐ **INSPECT THE OUTSIDE** of the shipping carton and/or game cabinet for shipping damage.

☐ **UPRIGHTS: UNLOCK AND SET ASIDE THE TOP-REAR PANEL.** Undo the two trunk latches on the inside of the bottom door. Open the door. Now check circuitry.

☐ **TABLE GAMES:** Unlock the component door on the Player 2 side of the game. Carefully lower the door to the floor.

☐ **ARE CONNECTORS SECURELY ATTACHED?** Reconnect any found loose. DON'T FORCE CONNECTORS. They're keyed and only fit one way. By the same token, take care: reversed edge-connectors can damage PC boards!

☐ **ARE PLUG-IN CHIPS FIRMLY-SEATED** in their sockets?

☐ **UNWRAP THE POWER CORD** coiled inside the cabinet. Now position the cord in the wood slot beneath the bottom door. (Table games: Drop the plug through the hole in the floor. DON'T PLUG IT IN YET!

☐ **SCRUTINIZE MAJOR SUBASSEMBLIES**, such as the monitor, control panel, transformer board and power supply. Make sure they're securely-mounted.

www.basementarcade.com

Location Of Controls

THE ON-OFF SWITCH is situated on the top-left corner of upright games as you face the back of the cabinet. Table games have an on-off switch underneath the game.

THE VOLUME CONTROL in upright games is located inside the coin door and on the right cabinet wall as you face the game.

DIAGNOSTIC SWITCHES are on the back of the coin door in upright games. In table games they're under the hood and on the top-right side as you face the front of the game.

These switches are used to access the Diagnostic-Mode Tests, the BOOKKEEPING TOTALS screen and the GAME ADJUSTMENTS screen. Refer to the appropriate sections below for information on each of these impor-

OTHER CONTROLS. Finally there are five more controls that are used somewhat less often that those above:

(1) The **memory-protect interlock switch** is near the diagnostic switch bracket (see above). This switch must be open when you clear BOOKKEEPING TOTALS or make GAME ADJUSTMENTS. It automatically opens when the coin door is open on upright or mini games and when the hood is up on cockpit games.

(2) The **CPU board reset switch** is located across the CPU board from the batteries respective boards.

(3) The **cashbox advance switch**, found inside the cashbox door on all models, allows bookkeeping information to be audited without permitting it to be zeroed.

www.basementarcade.com

CHAPTER 2 Game Operation

Power Turn-On

Game Operation

Bookkeeping Totals

Game Adjustments

Definitions of Pricing Terms

www.basementarcade.com

Power Turn-on

CAUTION: This game must be plugged into a properly-grounded outlet to prevent shock hazard and to ensure proper game operation. DO NOT use a "cheater" plug to defeat the ground pin on the line cord, and DO NOT cut off the ground pin.

WHEN THE GAME IS FIRST TURNED ON it produces a sound. Simultaneously general illumination should come on and a moment later a scanning "rug pattern" indicating the RAM test should appear on the screen. Next the rug should become stationary as the ROM test is performed.

IN A CORRECTLY-RUNNING GAME the rug pattern will be followed by the message "INITIAL CHECKS INDICATE ALL SYSTEMS GO". If RAM or ROM failure messages come up on the screen instead, refer to Power-Up Tests in TROUBLESHOOTING PROCEDURES.

Game Operation

GAME START

Insert coins; a random sound is produced and credits are displayed on the CRT. With two or more credits displayed, pressing **2-player start** initiates a 2-player, 3-turn game.*

THE JOYSTICK guides our noble protagonist (the **bubble**) around the sink in any of eight directions: N-NE-E-SE-S-SW-W-NW. The bubble is a slippery fellow, so action is slightly damped.

AT LAST, THE GAME THAT HAS EVERYTHING...including the kitchen sink! The player is represented by a growing bubble. There are three bubbles per game **(adjustable feature).** The object of the game is to clean up **"crums", greasies** and **ants** by floating over them.

Each one so disposed of makes for a bigger, more imposing bubble. The end of each round is signaled by a whirlpool. A bonus based on bubble size is awarded after the whirlpool.

BUT THE SOAP OPERA CONTINUES: Briny **brushes** and spiny **sponges** cavort in the sink among restless **razor blades** and rambling **roaches.** Beware! They can sap your suds or even soak you for your turn if the bubble touches one! Be careful too, not to fall down the drain (or your bubble will burst)!

A large bubble can touch these enemies, but if it does it will shrink, forfeiting bonus points. Small bubbles will be absorbed by these enemies...and you'll be washed up until your next turn! Any bubble that touches **razor blades** or sharp objects is wiped out.

TURN THE TIDE! Picking up the **broom** from the **cleaning lady** scores a bonus. You must have the broom to fend off a **roach.** If the broom is not pointing at the **roach,** he can swill down the bubble and cause you to lose a turn.

When the sink is clean, **the drain will flash green.** The bubble should then be large enough so that it can plunge down the drain to the next sink. If the bubble doesn't have a mouth, it isn't big enough and will be swept down the drain instead, sacrificing one turn.

HIGH SCORE SIGNATURE

Select letters with the joystick. Push right to move forward through the alphabet; push left to move backward. Then push the joystick up to lock in the letter.

Bookkeeping Totals

1. In Game-Over Mode, open the cashbox and depress the cashbox advance switch. The advance switch located on the diagnostic switch bracket can also be used. (See Figure 1.) The CRT should indicate all bookkeeping and evaluation totals. If so, go to step 3. If the CRT display comes up in the ROM test, perform step 2.

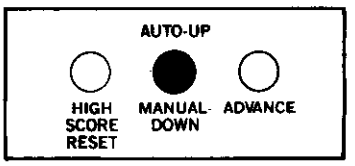

Figure 1. Diagnostic Button Switches

2. Continue to depress the cashbox advance switch, stepping the game through test programs for ROMs, RAMs, CMOS RAM, sounds switches, color RAMs, and then CRT test patterns, of which there are five. The fifth test pattern, color bars, directly precedes the CRT display of the bookkeeping and evaluation totals.

3. The bookkeeping and evaluation totals appear on the CRT as in Figure 2.

CLEARING BOOKKEEPING TOTALS

1. Depress ADVANCE to display Game Adjustments.
2. Use the joystick to position the cursor beside CLEAR BOOKKEEPING TOTALS (Figure 3).
3. Push the 2-PLAYER button.
4. Depress ADVANCE.

*adjustable feature

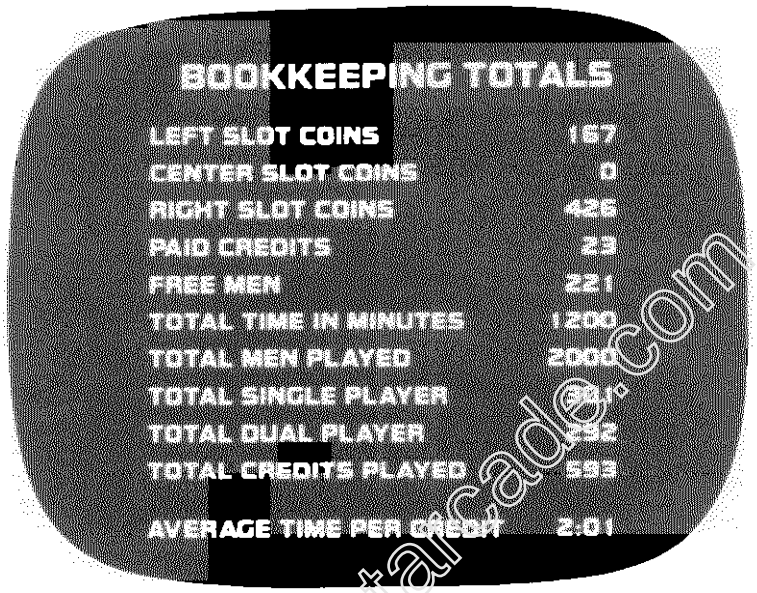

Figure 2. Bookkeeping display

www.basementarcade.com

IF AVERAGE TIME PER CREDIT RUNS BELOW 1:30 (Figure 2), then more liberal settings are recommended. What if AVERAGE TIME PER CREDIT runs over 2:30? Make the game tougher. Always try to keep AVERAGE TIME PER CREDIT close to the ideal of 2:00.

Game Adjustments

In the Game-Over Mode open the coin door. With the AUTO-UP/MANUAL-DOWN switch set to AUTO-UP, depress the coin door ADVANCE switch twice to cause a CRT display as shown in Figure 3.

SELECT THE FUNCTION YOU WISH to change by moving the joystick (push up to move the arrow up, down to move the arrow down). Then, making sure the coin door is open, push the 2-PLAYER button to increase or the 1-PLAYER button to reduce the value of the selected function.

- ☐ Select the appropriate difficulty level by using the 1-PLAYER (easier) and 2-PLAYER (harder) buttons (0 = easiest or liberal, 5 = average, 9 = hardest or conservative).
- ☐ For a shorter game, increase the bonus points figure (EXTRA MAN EVERY). For a longer game, reduce it. (1,000 = long/99,000 = short).
- ☐ For a shorter game, decrease the number of MEN FOR 1 CREDIT GAME. For a longer game, increase the number. (1 = short/99 = long).

GAME PRICING is selected with standard settings or with custom settings as shown in Table 1. Note that free play can be elected by entering the code number 9 at the PRICING SELECTION function.

FOR STANDARD SETTINGS you need change only the PRICING SELECTION. For custom settings, first set PRICING SELECTION to zero and then set the remaining values according to Table 1.

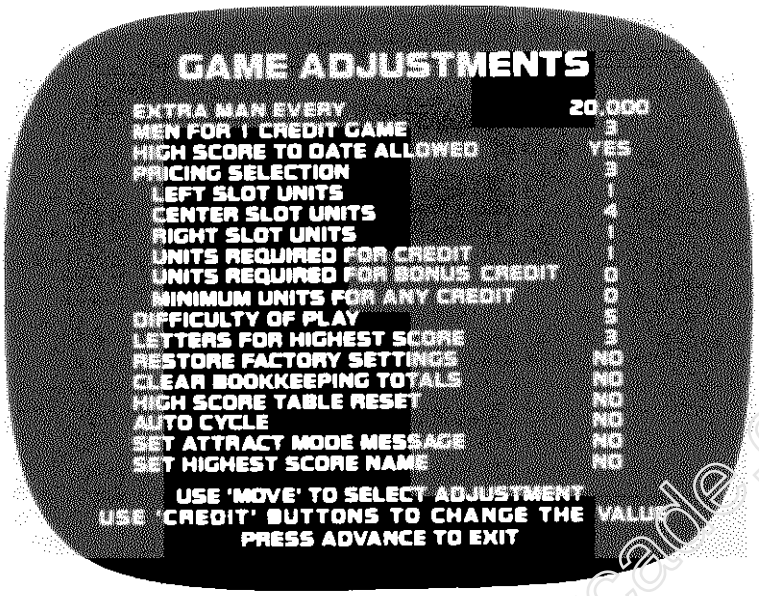

Figure 3. Game adjustments showing factory settings

www.basementarcade.com

HIGHEST SCORE SIGNATURE

The number of letters allowed the highest-scoring player for entering his name can be varied from 3 to 20 and is recommended as 3. If objectionable words are entered as the signature name, you can change the lettered entry leaving the highest score the same. See Setting Highest Score Name.

RESTORE FACTORY SETTINGS

1. Position the cursor beside RESTORE FACTORY SETTTINGS.
2. Push the 2-PLAYER button.
3. Depress ADVANCE twice.

RESETTING HIGH SCORE TABLE

1. Position the cursor beside RESET HIGH SCORE TABLE.
2. Push the 2-PLAYER button.
3. Depress ADVANCE.

SETTING ATTRACT MODE MESSAGE

1. Position the cursor beside SET ATTRACT MODE MESSAGE.
2. Push the 2-PLAYER button.
3. Depress ADVANCE.
4. Enter up to two lines of your message following instructions on the screen.
5. Depress ADVANCE to enter Game-Over Mode.

To restore the Williams attract mode message, perform steps 1 through 3 and then turn the game OFF and back ON.

SETTING HIGHEST SCORE NAME

1. Position the cursor beside SET HIGHEST SCORE NAME.
2. Push the 2-PLAYER button.
3. Depress ADVANCE.
4. Enter the new signature.
5. Depress ADVANCE to enter Game-Over Mode.

An alternate, simpler method enters the factory highest score signature. In the Game-Over Mode, hold HIGH SCORE RESET down. After a few seconds a sound is produced and the factory highest score signature has been activated.

Table 1. Game Pricing

Coin Door Mechanism	Credits/ Money	Pricing Selection	Left Slot Units	Center Slot Units	Right Slot Units	Units Per Credit	Units Req'd For Bonus Credit	Min. Units For Any Credit
Twin Quarter	1/25¢, 5/$1	0	1	4	1	1	4	0
Quarter, Dollar,	2/50¢, 5/$1	0	1	4	1	1	4	2
Quarter	**•1/25¢, 4/$1**	**3**	**1**	**4**	**1**	**1**	**0**	**0**
	2/50¢, 4/$1	0	1	4	1	1	0	2
	1/50¢, 3/$1, 4/$1.25	0	3	12	3	4	15	0
	1/50¢, 3/$1, 7/$2	0	12	48	12	14	96	24
	•1/50¢, 3/$1, 6/$2	**1**	**1**	**4**	**1**	**2**	**4**	**0**
	•1/50¢	**5**	**1**	**4**	**1**	**2**	**0**	**0**
1DM, 5DM	**•1/1DM, 6/5DM**	**2**	**6**	**0**	**1**	**1**	**0**	**0**
20-Cent, 50-Cent	1/20¢, 3/50¢	0	6	0	15	5	0	0
1 Franc, 5 Franc	**•1/2F, 3/5F only**	**4**	**1**	**16**	**6**	**2**	**0**	**0**
25 Cent,	**•1/25¢, 4/1G**	**6**	**1**	**0**	**4**	**1**	**0**	**0**
1 Guilder	1/25¢, 5/1G	0	1	0	4	1	4	0
5 Franc	**•1/5F, 2/10F**	**7**	**1**	**0**	**2**	**1**	**0**	**0**
10 Franc	**•1/10F**	**8**	**1**	**0**	**2**	**2**	**0**	**0**
1 Franc, 2 Franc	**•2/1F, 5/2F**	**2**	**0**	**0**	**1**	**1**	**0**	**0**
100 Lire, 200 Lire	**•1/200 Lire**	**8**	**1**	**0**	**2**	**2**	**0**	**0**
Twin Coin	**•1/1 Coin**	**3**	**1**	**4**	**1**	**1**	**0**	**0**
	•1/2 Coins	**5**	**1**	**4**	**1**	**2**	**0**	**0**
	1/3 Coins, 2/5 Coins	0	2	0	2	5	0	0
1-Unit, 5-Unit	**•1/2, 3/5**	**4**	**1**	**16**	**6**	**2**	**0**	**0**
	1/1, 5/5	0	1	0	5	1	0	0
	1/3, 2/5	0	2	0	10	5	0	0
Any	**•Free Play**	**9**	**1**	**4**	**1**	**1**	**0**	**0**

www.basementarcade.com

Definitions Of Pricing Terms

PRICING SELECTION allows a **shorthand** method of setting the pricing functions. If a number from one to nine is entered into the PRICING SELECTION function, a corresponding standard setting (shown in bold type above) will be entered into the game. **The rest of the pricing functions are automatically set for that standard.**

THE PRICE OF ONE GAME (number of coins per game) is equal to the number of SLOT UNITS for any one slot divided by the number of UNITS PER CREDIT. If the number of LEFT SLOT UNITS (or RIGHT SLOT UNITS) equals **X** and the number of UNITS PER CREDIT equals **Y**, then the **price of one game is X/Y.**

UNITS REQUIRED FOR BONUS CREDIT is the number of games that must be purchased before a free game is awarded.

MINIMUM UNITS FOR ANY CREDIT is the least number of coins allowed per game or games. Or, put another way, the MINIMUM UNITS FOR ANY CREDIT determines the smallest number of whole games that may be paid for at one time.

For example if an operator wants to allow one play for a quarter but wishes to encourage multiple game-playing, he may enter:

- "0" in the PRICING SELECTION function

This zero value automatically sets all pricing functions. However minimum units for any credit must be raised to "2" or higher value to achieve the operator's goal. Here are the rest of the functions as they should appear.

- "1" in the LEFT SLOT UNITS function
- "4" in the CENTER SLOT UNITS function
- "1" in the RIGHT SLOT UNTIS function
- "0" in the UNITS REQUIRED FOR BONUS CREDIT function
- "1" in the UNITS PER CREDIT Function
- "2" in the MINIMUM UNITS FOR ANY CREDIT function

These values allow one game to be played for a quarter, but ONLY when two or more games are paid for at a time. Incidentally, the "4" in CENTER SLOT UNITS allows four games per dollar coin (center slot only). See "2/50¢, 4/$1" above.

CHAPTER 3 Troubleshooting Procedures

Introduction

Power-Up Tests

+5VDC Power Supply Adjustments

Self-Diagnostics

Diagnostic Mode Tests

Sound Board Diagnostics

CMOS RAM Data Test Protocol

www.basementarcade.com

INTRODUCTION

Certain types of game malfunctions may inhibit the game's diagnostic or display faculties. Troubleshooting procedures for most of these types of malfunctions as well as malfunctions that permit self-diagnosis are covered below. Our troubleshooting algorithm begins with **Power-Up** and continues until **Game Over Mode**. All procedures can be performed with minimal test equipment or merely by observing the game itself.

POWER-UP TESTS

NO GENERAL ILLUMINATION	NO INITIAL VIDEO (RUG PATTERN)	CHECKING POWER SUPPLY BOARD
(1) Check fuse F2 on power supply board. (2) Check for proper installation of jumpers W1, W2, W3 and/or resistor R27. (Some machines MAY NOT have an R27. Refer to your drawing set.) (3) Check 4P1/J1, 4P3/J3, 6P2/J2 and 6P3/J3. (4) If all the above don't turn up the problem, check power supply board.	(1) Press reset button on CPU Board. (2) Try RAM and ROM **Diagnostic-Mode** tests (see below). (3) If these tests don't turn up the problem, check power supply board.	(1) Swap power supply board with one from known-good game. (2) If game plays, problem is on power supply board. (3) If game doesn't play, check power transformer with voltmeter. (4) If known-good power supply is unavailable for tests above, check +5V, –5V and +12V outputs on power supply in game. Each MUST BE within 2% of rated output with less than 0.1% AC hum.

MORE POWER-UP TESTS

TEST	ROM BOARD LEDS RECOGNIZE CONDITION	ROM BOARD LEDS IDENTIFY BAD CHIPS	VIDEO	REMEDY
GENERAL	"0" means all power-up tests passed	—	(1) scanning rug pattern (2) stationary rug pattern (3) "INITIAL TESTS INDICATE ALL SYSTEMS GO" (4) Game-Over Mode	If any video (see left) is missing or error message is displayed, proceed to **Diagnostic-Mode** tests.
CMOS (See Appendix A)	"0" means tests passed	—	"HIGH SCORE TABLE RESET" "BOOKKEEPING TOTALS CLEARED" "ADJUSTMENT FAILURE" "RESTORE FACTORY SETTINGS BY OPENING FRONT DOOR OR TABLETOP AND TURNING GAME ON AND OFF"	(1) Open coin door or tabletop and turn power off and on.
	"0" means tests passed	—	"FACTORY SETTINGS RESTORED"	(2) Press ADVANCE. Game should return to Game-Over Mode.
BATTERY (See Appendix A)	"0" means tests passed	—	"HIGH SCORE TABLE RESET" "BOOKKEEPING TOTALS CLEARED" "ADJUSTMENT FAILURE" "RESTORE FACTORY SETTINGS BY OPENING FRONT DOOR OR TABLETOP AND TURNING GAME ON AND OFF"	(1) Open coin door or tabletop and turn power off and on. Or: press ADVANCE. In either case, game should return to Game-Over Mode. (2) Check AA alkaline cells on CPU Board. (3) If problem persists, proceed with CMOS RAM test by putting the game into its **Diagnostic-Mode** (see SELF-DIAGNOSTICS).
MEMORY PROTECT INTERLOCK (See Appendix A)	"0" means tests passed	—	"HIGH SCORE TABLE RESET" "BOOKKEEPING TOTALS CLEARED" "ADJUSTMENT FAILURE" "RESTORE FACTORY SETTINGS BY OPENING FRONT DOOR OR TABLETOP AND TURNING GAME ON AND OFF"	(1) Making and breaking memory protect interlock switch, check with VOM and replace if faulty. (2) Replace if faulty: Memory protect gates 6E, IC1, Q1, or CMOS RAMS.
SPECIAL CHIP	"0" means tests passed	—	(1) scanning rug pattern (2) blank screen instead of "INITIAL TESTS INDICATE ALL SYSTEMS GO" (3) high score table with no scores (4) intro blank or program crash	(1) Turn power off. (2) To find bad chip, replace 2 special chips one at a time with known good chips. (3) Turn machine on after each replacement and run through Power-Up Tests.

www.basementarcade.com

+5VDC Power Supply Adjustments

Before adjusting the voltage output, always check at the output of the supply for AC hum. This hum should never rise above .005V on the +5VDC supply. If it does, consult your schematic drawing set for proper DC voltages throughout the circuit.

Test for these with the DC setting of your multimeter. Make a second check using the AC setting. Pay particular attention to readings at TP5 (top of capacitor C10). If the voltage here is low (less than +11VDC) or if you find excessive ripple (more than 700mVrms), replace the capacitor.

If TP1 is less than +4.95VDC remove R10. If TP1 is still less than +4.95VDC, then check precision resistors R25 and R26. If they are within the 1% tolerance, then check IC2.

Self-Diagnostics

If RAM or ROM failure messages are displayed on the CRT after the "rug pattern," proceed with self-diagnostics. Self-diagnostic procedures are controlled by the AUTO-UP/MANUAL-DOWN and ADVANCE switches. (See Figure 1.)

Set the AUTO-UP/MANUAL-DOWN switch to the MANUAL-DOWN position and depress the ADVANCE pushbutton. The game is now in its **Diagnostic Mode** and a ROM test is performed. With ROM test results present on the CRT display, set the AUTO-UP/MANUAL-DOWN switch to the AUTO-UP position. Depressing the ADVANCE pushbutton initiates the RAM test. Further tests (CMOS, sound, switch, color RAM and monitor test patterns) are encountered one after the other as the ADVANCE pushbutton is depressed (once more for each subsequent test).

MONITOR TEST PATTERNS *(19"-Monitor Upright Games only.)* For ease in monitor adjustments, the monitor may be slid back and the screen viewed in the CRT mirror on the inside-top of the cabinet.

Remove the two bolts and carefully slide the monitor back in its shelf. Secure the monitor in the extended position by inserting the two bolts through holes provided at the left side of the monitor.

AUTO-CYCLE MODE. From the color bar pattern (or Game Over with the switch set to AUTO-UP) depress ADVANCE two times to display GAME ADJUSTMENTS.

1. Position the cursor beside AUTO CYCLE with the joystick and push the 2-PLAYER button.
2. Depress ADVANCE.
3. The system will now sequence through ROM, RAM, and CMOS RAM tests repeatedly. The coin door must be open during the Auto-Cycle test. If an error is detected, the test is terminated and the failure indication is displayed on the CRT.
4. To terminate the Auto-Cycle test, turn the game OFF and ON.

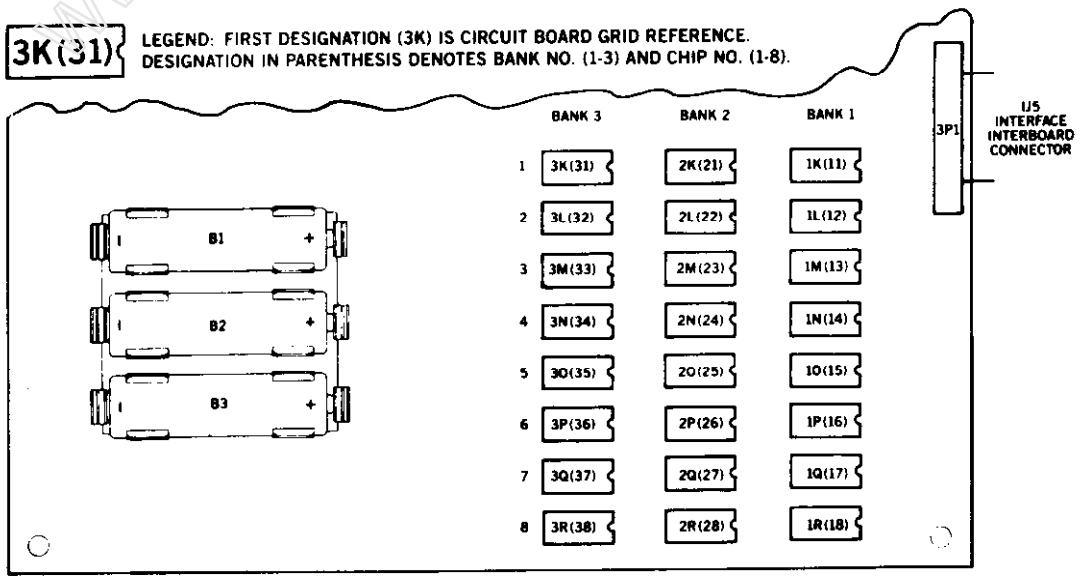

Figure 4. RAM Location and Numbering on CPU Board

DIAGNOSTIC-MODE TESTS

TEST	ROM BOARD LEDS RECOGNIZE CONDITION	ROM BOARD LEDS IDENTIFY BAD CHIPS	VIDEO	REMEDY
ROM	"2" means ROM error	2-digit ROM chip no.	"ROM ERROR" and ROM chip no.	(1) Turn power off. (2) Replace suspected chip.
RAM	"1" means RAM error	Bank no. first... then chip no. in bank (see figure 4)	"RAM ERROR" followed by RAM bank no. and chip no. (Note: with multiple RAM failures this display may not appear)	(1) Check for these normal voltages on indicated RAM chip: –5/pin 1, +12/pin 8, +5/pin 9. (2) Turn power off. (3) Replace suspected chip. (4) With multiple RAM failures always check power supply. See POWER-UP TESTS.
CMOS (see appendix A)	"3" means CMOS RAM error	—	"CMOS RAM ERROR OR WRITE PROTECT FAILURE"	(1) With power off, check pin 18 of CMOS RAM for 3.2VDC minimum. If present, check or replace CMOS chips. If absent, replace AA alkaline cells. (2) With new alkaline cells and power off, check for 3.2V minimum at pin 18. If still absent, replace diodes D9 and D10. (3) Upon power-up and reentry into diagnostics if CMOS error message persists, check CMOS RAM memory protect and address decoding circuits with a logic probe.

Tests 4 and 7 provide sequential subtests. To stop automatic cycling set switch to MANUAL-DOWN. Depress ADVANCE in MANUAL-DOWN to step through subtests. LED indications are not made for these tests.

TEST & PROCEDURES	VIDEO	REMEDY OR ADJUSTMENT
SOUND (Test 4)	"SOUND LINE 1" "SOUND LINE 2" "SOUND LINE 3" "SOUND LINE 4" "SOUND LINE 5" "SOUND LINE 6" (These appear one at a time.)	MISSING — CHECK 1 — 2P4/10P3 pin 3 2 — 2P4/10P3 pin 2 3 — 2P4/10P3 pin 5 4 — 2P4/10P3 pin 4 5 — 2P4/10P3 pin 7 6 — 2P4/10P3 pin 6 all — perform **Sound Board Diagnostics** (see below) ***NOTE:*** If any two sounds are the same, check for a short between the select lines with the same sound.
SWITCH (Test 5) (1) Set switch to MANUAL-DOWN and clear any stuck switches. (2) CRT should indicate no switches closed. (3) Operate switches and check for display of switch name.	CRT indicates AUTO-UP closed and any stuck switches. **CRT Display for each Switch...** **ROM BOARD** / **INTERFACE BOARD** ADVANCE — 1-PLAYER START AUTO-UP — 2-PLAYER START HIGH SCORE RESET — MOVE UP 2 LEFT COIN — MOVE DOWN 2 CENTER COIN — MOVE LEFT 2 RIGHT COIN — MOVE RIGHT 2 SLAM SWITCH	(Refer to CABINET WIRING Diagram) (1) ROM BOARD SWITCH STUCK: Disconnect 2P3. (2) INTERFACE BOARD SWITCH STUCK: Disconnect 3P2 or 3P3. (3) ROM BOARD SWITCH DOES NOT OPERATE: Ground corresponding pin of 2P3. (4) INTERFACE BOARD SWITCH DOES NOT OPERATE: Ground corresponding pin of 3P2 or 3P3. ☐ **SYMPTOM REMAINS SAME** ... ROM Board or Interface Board Faulty. ☐ **SYMPTOM CLEARS UP** ... Problem is in switches or wiring. **ADDITIONAL TESTS FOR OPTO SWITCHES** (5) Check that +5VDC is at pin 1 of 12P1. (6) With joystick in center position, check for 0.1V at base of OFF transistor(s) (Q1 thru Q4) and +5V at pin(s) 1, 2, 4 and 5 of 12P1. (7) With joystick moved from center position, check for 0.7V at base of transistor(s), and 0.1V at corresponding pins 1, 2, 4 and 5 of 12P1.

www.basementarcade.com

MORE DIAGNOSTIC MODE TESTS

TEST & PROCEDURES	VIDEO SEQUENCES	REMEDY OR ADJUSTMENT	
		REPLACE RAM 1B	REPLACE RAM 2B
COLOR RAM (Test 6) **Note that a blank sequence** or two sequences with the same shade indicate a faulty 1A flip-flop, 1B RAM or 2B RAM or a failure in the color analog circuit. Check voltages on Q1 (green transistor), Q2 (red transistor) and Q3 (blue transistor). During the eight full-screen color tests, the base voltage (center pin) on each transistor should vary between 3.8V (brightest color) and 4.4V (no color). ***Color RAM Check*** (1) CRT sequences through 8 colors, 2 seconds each. (2) Thick vertical band indicates color RAM fault.	1) light red screen 2) red screen 3) dark red screen	too-light or too-dark red or gray band	magenta band
	4) light green screen 5) green screen 6) dark green screen	yellow band	cyan band
	7) light blue screen 8) blue screen	magenta band	too-light or too -dark blue or gray band
	4) light green screen	green band	dark green band or gray band
	5) green screen	light green band	dark green band or gray band
	6) dark green screen	—	gray band
MONITOR & COLOR RAM (Test 7)	**cross hatch pattern**	**Aids you in setting up** vertical and horizontal linearity, convergence, and focus.	
	red screen **green screen** **blue screen** **color pattern**	**Aids you** in optimizing color purity.	
	color bars •double-width •half-width •transposed •missing	**If color RAM test 6 indicates** no faults, symptoms at left suggest a fault in 1A, 1B, 2B or 2C chips.	

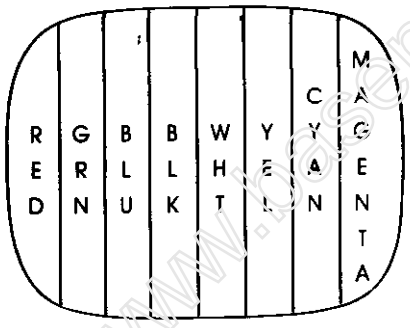

Color Bar Pattern

www.bassmantarcade.com

SOUND BOARD DIAGNOSTICS			
SYMPTOM	**TEST & PROCEDURES**		
MISSING SOUNDS; NO SOUND—STEP 1 *(ASSUMPTION: INPUT SECTION FAILURE)*	☐ **CHECK SOUND-SELECT INPUTS**		
	TEST	**TOOL**	**CONDITION & REMEDY**
	Sound Board connector 10P3/J3-2 to 7	logic probe (game on and in Test 4)	•PULSING–proceed •LOW–check jacks, foils •STILL LOW–perform ROM BOARD checkbox.
	SR1 DIP resistors R3-R9	VOM-reading ohms (game off)	•ALL 4.7K-proceed •ANY OPEN–replace SR1
	C3-C9	VOM-reading ohms (game off)	•ALL OKAY–proceed •ANY SHORTED–replace bad
	IC5-1, IC7-14 (power pins)	logic probe (game on and in Test 4)	•HIGH–proceed •LOW–replace C19 (IC5) or C21 (IC7) •STILL LOW–replace bad IC
	IC5-2, 4, 6, 10, 12, 15; IC7-4, 6	logic probe (game on and in Test 4)	•PULSING–proceed •LOW–replace chip
	IC10-18 and 19 (PIA)	logic probe (game on and in Test 4)	•PULSING–proceed •LOW–lift C20, retest •PULSING NOW–replace C20 •STILL LOW–replace IC6, retest
	IC10-10 to 17 (PIA)	logic probe (game on and in Test 4)	•PULSING–proceed •SOME LOW–replace IC •ALL LOW–lift C31, retest •PULSING NOW–replace C31 •STILL LOW–replace IC

www.basementarcade.com

MORE SOUND BOARD DIAGNOSTICS

MISSING SOUNDS; NO SOUND—STEP 2

(ASSUMPTION: OFF-BOARD FAILURE)

☐ **CHECK ROM BOARD OUTPUTS**

(1) If you hear game sounds, disconnect and then reconnect Sound Board connector 10P3/J3.

(2) You should hear one or more game sounds. If so, put game in **Diagnostic Mode** Test 4 and proceed with this checkbox. If not, go ahead to POWER SUPPLY checkbox below.

TEST	TOOL	CONDITION & REMEDY
ROM Board connector 2P4/J4-2 to 7	logic probe (game on and in Test 4)	•PULSING–repair cable to Sound Board •ANY LOW–repair jack or foil, proceed
9C DIP resistors 2 to 8	VOM-reading ohms (game off)	•ALL 4.7K–proceed •ANY OPEN–replace 9C
C40-53	VOM-reading ohms (game off)	•ALL OKAY–proceed •ANY SHORTED–replace bad
8C-10 to 15 (PIA)	logic probe (game on and in Test 4)	•PULSING–proceed •SOME LOW–replace 8C

NO SOUND

(ASSUMPTION: POWER SECTION FAILURE)

☐ **CHECK ON-BOARD POWER SUPPLY**

(1) With power off, test for fuse continuity at F1 and F2.

(2) With power on, check for +12V unregulated DC at TP1 and at pin 5 of IC1.

(3) Now check for +5V regulated DC between TP4 and TP3. If voltages are absent or low, turn off game and lift one pin of filter capacitors C25, C26 and C27.

(4) Check each with ohmmeter for possible shorts.

(5) If capacitors are good and unregulated voltages test okay but you're missing +5V, replace regulator chip (IC8).

STILL NO SOUND

(ASSUMPTION: AUDIO SECTION FAILURE)

☐ **CHECK AUDIO (ANALOG) SECTION**

(1) Turn power on; turn up volume control. Momentarily place powered-up AC soldering pencil on final amplifier's input pin (IC1, pin 1 or 10P4, pin 2). If you hear low hum, audio IC, volume pot and speaker are okay.

(2) Repeat test at Q2 emitter. If you hear hum, analog section is okay. Step (1) will also work if you simply touch amplifier's input pin. *However output level of hum will be much lower than with soldering iron.* DO NOT use a soldering pencil of over 40 watts. Cordless models will NOT work here.

MISSING SOUNDS; NO SOUND

(ASSUMPTION: DIGITAL FAILURE)

☐ **CHECK SOUND ROM (IC12) AND RELATED CIRCUITRY**

(1) Turn power on.

(2) If you have no game sounds but power supply tests show normal voltages and no ripple on +5V, check crystal clock circuit. Using DVM or logic probe, test for pulsing AC across crystal. If clock signal's absent, replace crystal and associated capacitors.

(3) Turn power off.

(4) Swap sound ROM (IC12) and then microprocessor chip (IC9) with known-good chips.

(5) Power-up and test Sound Board after each swap by pushing DIAGNOSTIC button.

www.bagmanmarcade.com

CMOS RAM Data Test Protocol

The first sub-test of the CMOS RAM data is that of the ATTRACT MODE MESSAGE checksum. If the test does not pass, the factory ATTRACT MODE MESSAGE is restored. Next, the game adjustments are checked and restored to factory settings if an error is found. If game adjustments are found intact, the high score table is checked for any bad entries. Bad entries are replaced with a score of 4,000 points and no initials. If all entries check, the game returns to the Game Over Mode.

If game adjustments are restored to factory settings, the AUDIT TOTALS are checked. If 5 or more audit digits are other than 0-9 (that is hexadecimal A through F) all audit totals are cleared. This is followed by a check of the high score table and the table is reset to factory settings if errors are found. Finally, game adjustments are rechecked and either OPEN COIN DOOR or FACTORY SETTINGS RESTORED is displayed. With the former, open the coin door and turn the game OFF and ON and then FACTORY SETTINGS RESTORED will be displayed. Return to game over by depressing the ADVANCE pushbutton or by turning the game OFF and ON a second time.

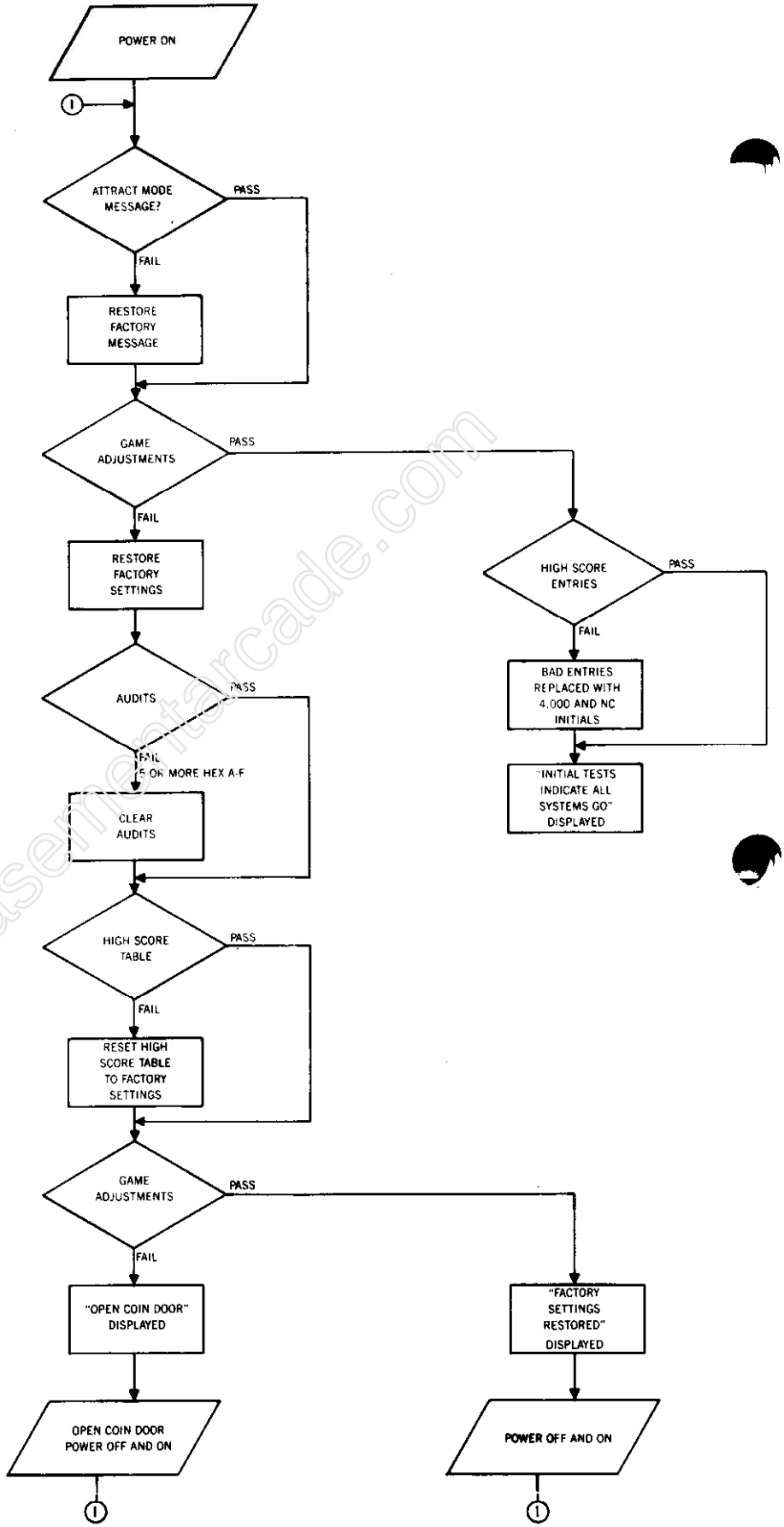

www.basementarcade.com

CHAPTER 4 Parts

www.basementarcade.com

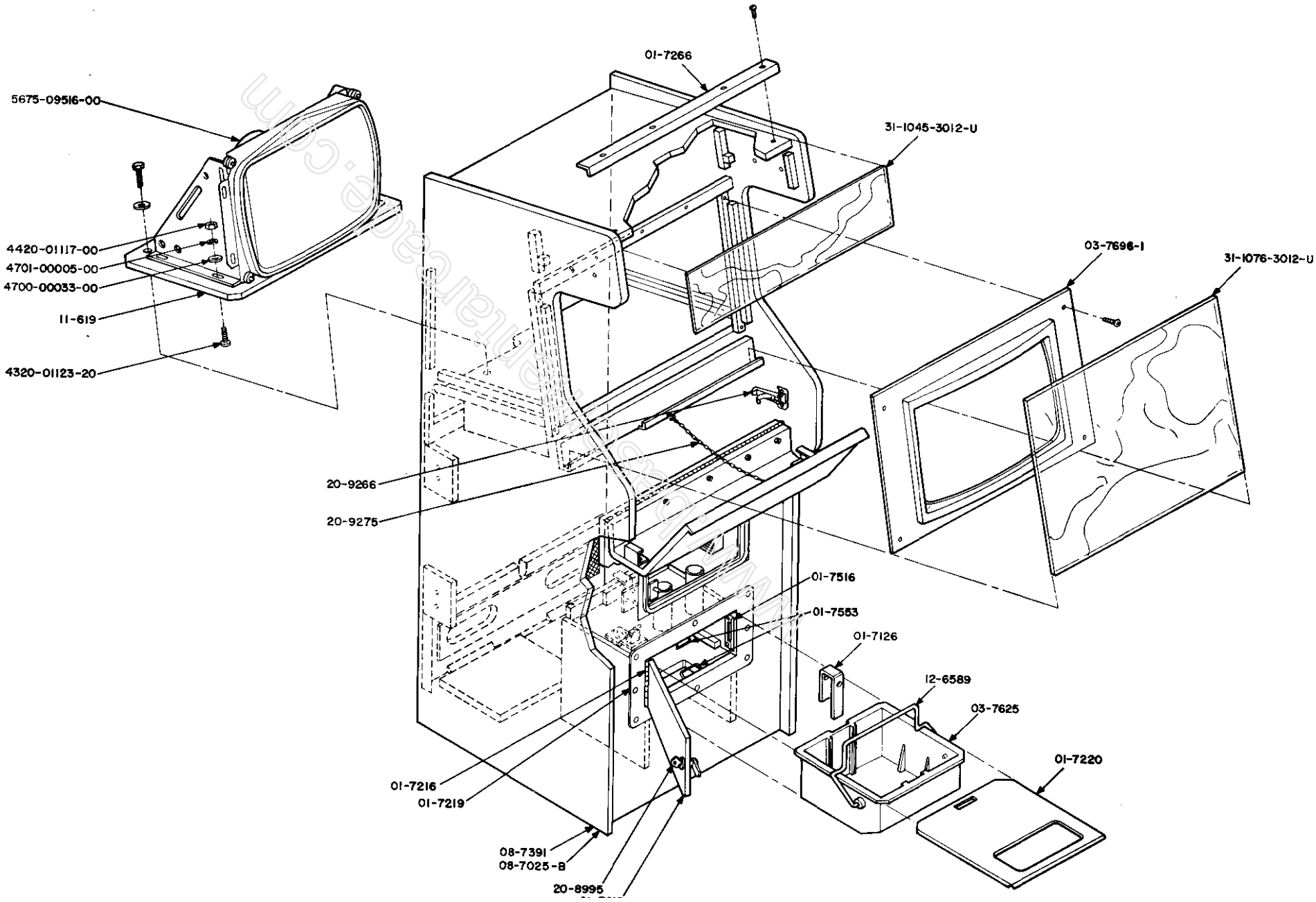
01-7266
5675-09516-00
31-1045-3012-U
4420-01117-00
4701-00005-00
4700-00033-00
11-619
4320-01123-20
03-7698-1
31-1076-3012-U
20-9266
20-9275
01-7516
01-7553
01-7126
12-6589
03-7625
01-7220
01-7216
01-7219
08-7391
08-7025-8
20-8995

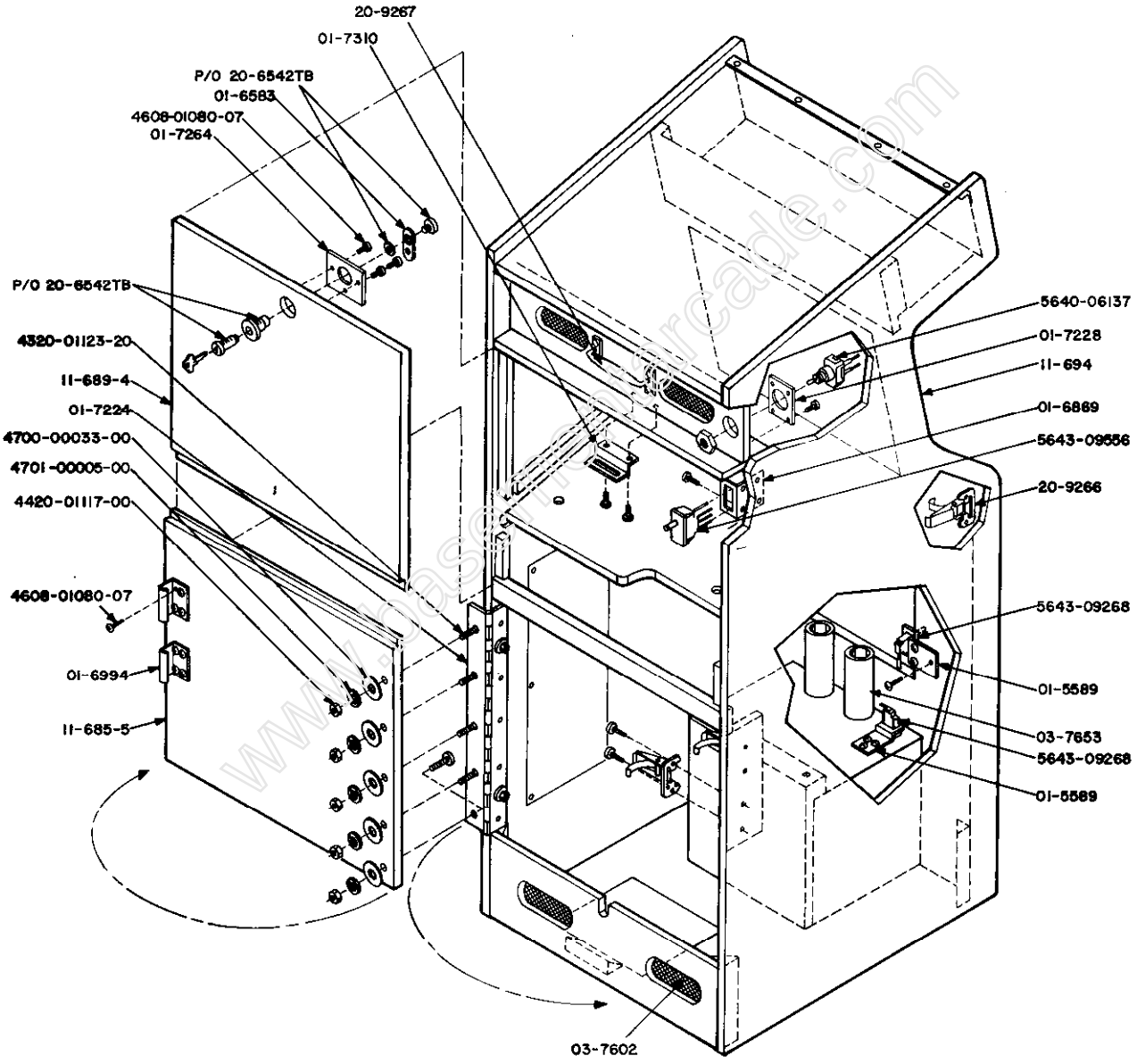
20-9267
01-7310
P/O 20-6542TB
01-6583
4608-01080-07
01-7264
P/O 20-6542TB
4320-01123-20
11-689-4
01-7224
4700-00033-00
4701-00005-00
4420-01117-00
4608-01080-07
01-6994
11-685-5
03-7602
5640-06137
01-7228
11-694
01-6869
5643-09556
20-9266
5643-09268
01-5589
03-7653
5643-09268
01-5589

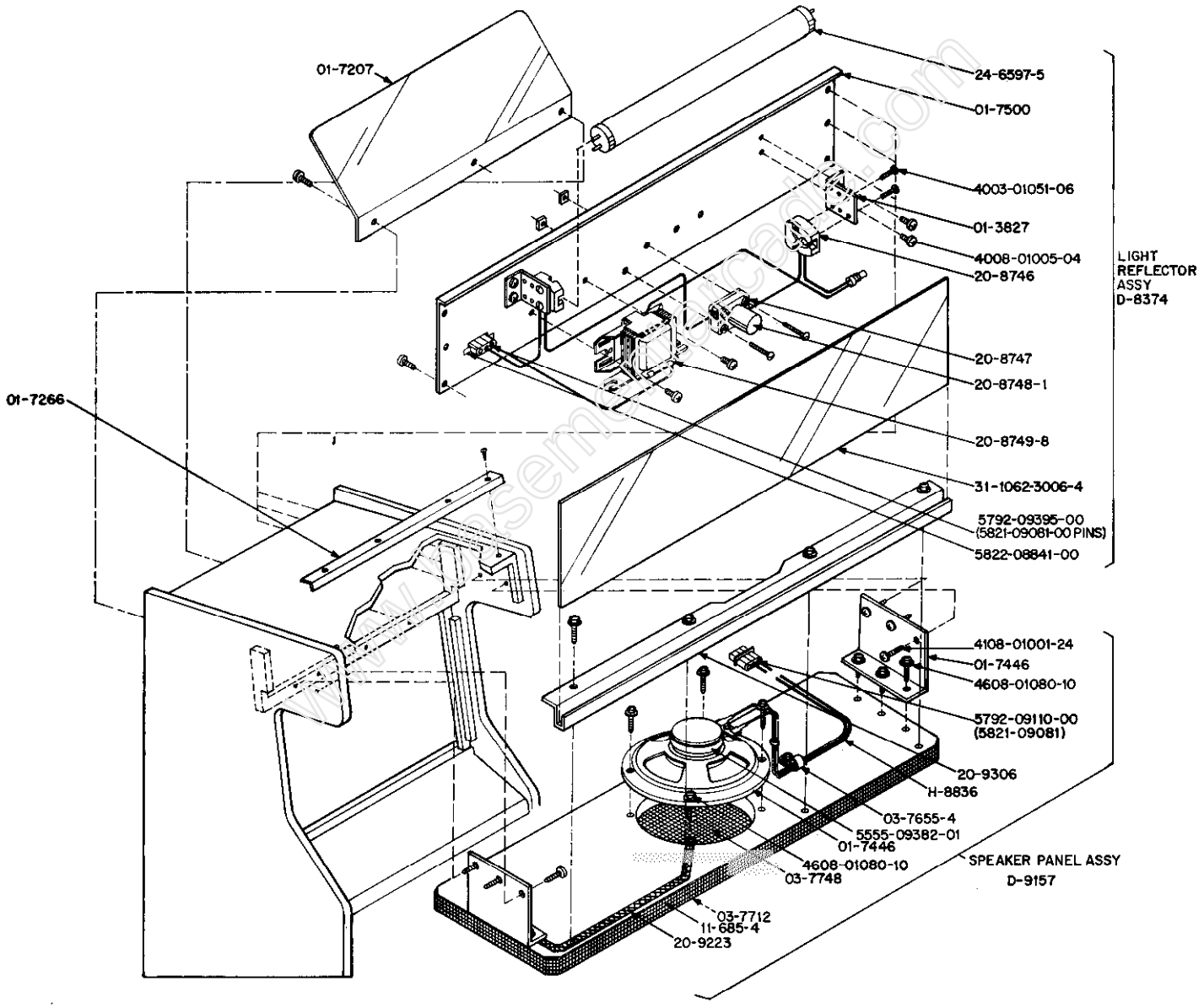
01-7207
24-6597-5
01-7500
4003-01051-06
01-3827
4008-01005-04
20-8746
LIGHT REFLECTOR ASSY D-8374
20-8747
20-8748-1
01-7266
20-8749-8
31-1062-3006-4
5792-09395-00 (5821-09081-00 PINS)
5822-08841-00
4108-01001-24
01-7446
4608-01080-10
5792-09110-00 (5821-09081)
20-9306
H-8836
03-7655-4
5555-09382-01
01-7446
4608-01080-10
03-7748
SPEAKER PANEL ASSY D-9157
03-7712
11-685-4
20-9223

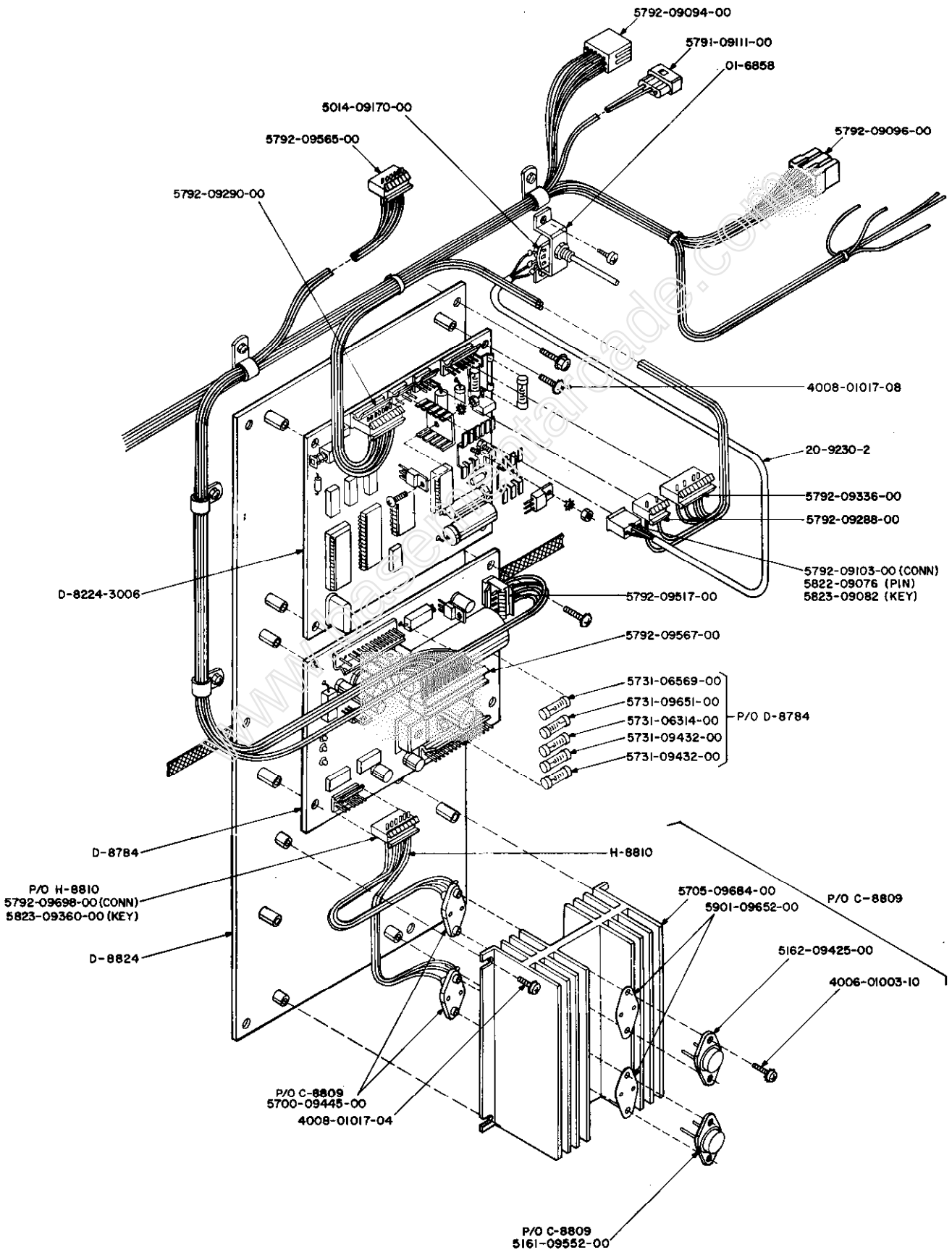
5792-09094-00
5791-09111-00
01-6858
5014-09170-00
5792-09565-00
5792-09096-00
5792-09290-00
4008-01017-08
20-9230-2
5792-09336-00
5792-09288-00
5792-09103-00 (CONN)
5822-09076 (PIN)
5823-09082 (KEY)
D-8224-3006
5792-09517-00
5792-09567-00
5731-06569-00
5731-09651-00
5731-06314-00
5731-09432-00
5731-09432-00
P/O D-8784
D-8784
H-8810
P/O H-8810
5792-09698-00 (CONN)
5823-09360-00 (KEY)
5705-09684-00
5901-09652-00
P/O C-8809
D-8824
5162-09425-00
4006-01003-10
P/O C-8809
5700-09445-00
4008-01017-04
P/O C-8809
5161-09552-00

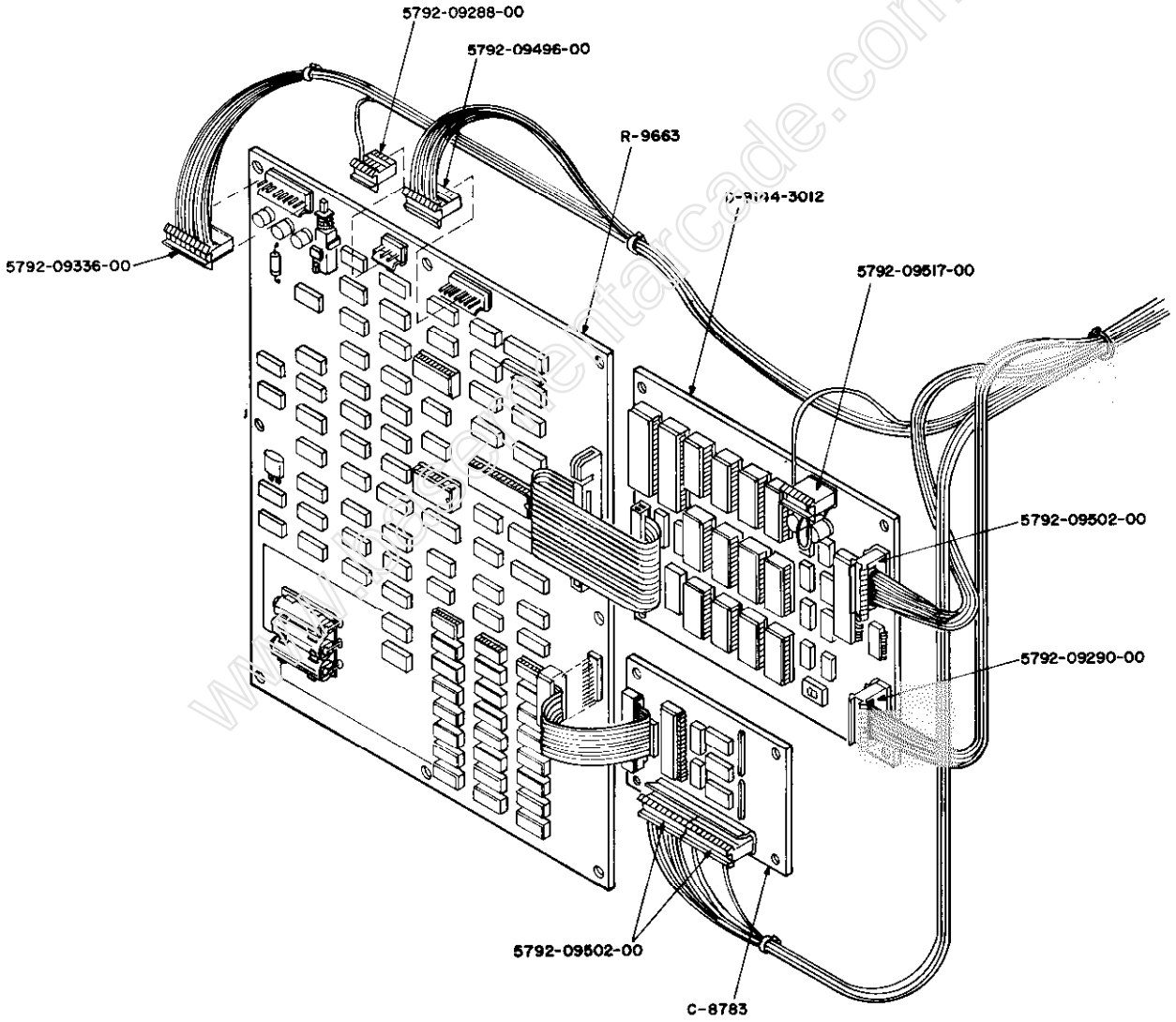
5792-09288-00
5792-09496-00
R-9663
D-9644-3012
5792-09336-00
5792-09517-00
5792-09502-00
5792-09290-00
5792-09502-00
C-8783

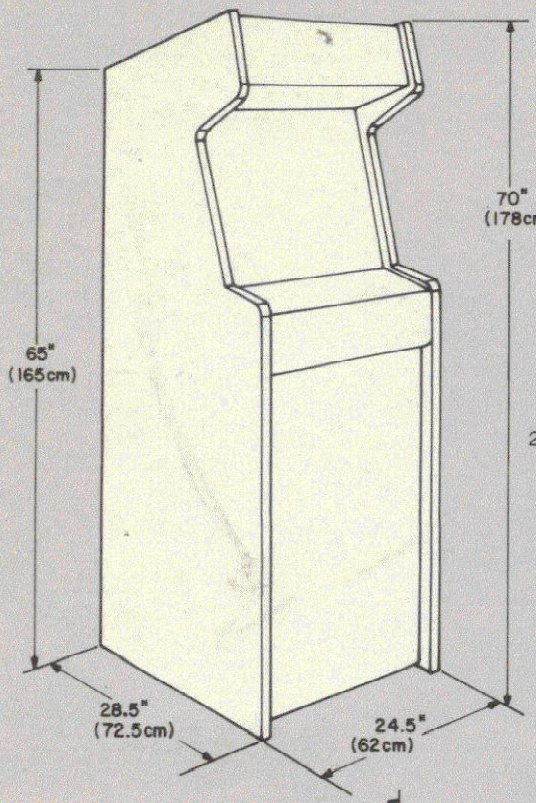

UPRIGHT
Weight
270 lbs. (122.5 kg.) uncrated
290 lbs. (131.5 kg.) crated

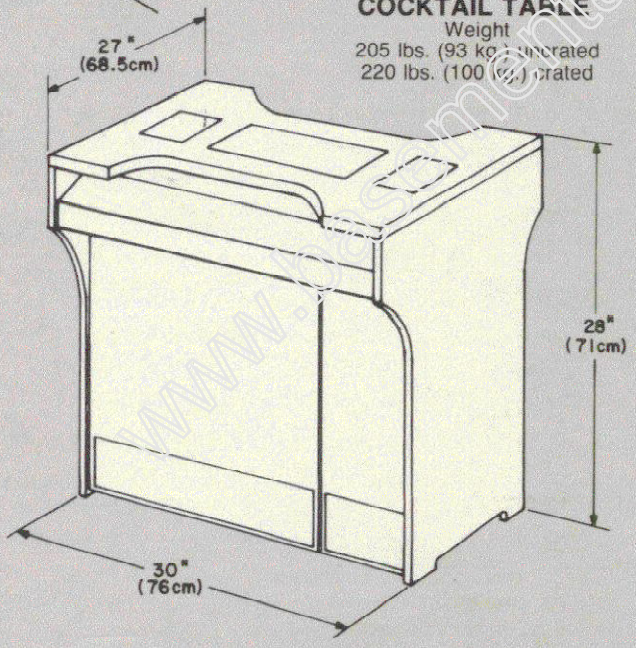

COCKTAIL TABLE
Weight
205 lbs. (93 kg.) uncrated
220 lbs. (100 kg.) crated

Mini-upright also available on special order.

POWER REQUIREMENTS
115/230VAC Nominal, 50/60Hz
@1.7/0.85A 192W
(20A surge for one cycle
at power turn on)
Normal Line=98-126VAC
196-252VAC
High Line*=113-145 VAC
226-290VAC
Low Line*=88-113VAC
176-226VAC
*Transformer jumpers required.
See service manual.

ENVIRONMENT
Operating Temperature
0° to +45°C ambient
(+32° to +113°F)

Storage Temperature
−40° to +65°C ambient
(−40° to +149°F)
90% RH at 40°C (104°F), non-condensing

MONITOR
19″ Color Raster*
non-interlaced
UL, CSA & DHHS Approved
*13″ monitor on mini-upright models

VIDEO SYSTEM**
256 Colors, 340 x 240 PIXEL Resolution
6809E Microprocessor
ROM: 48K BYTES
Video and Scratch RAM: 50K BYTES
CMOS RAM: 1Kx4

SOUND SYSTEM**
6808 Microprocessor
ROM: 4K BYTES

JOYSTICK
8-way optical-digital

**Patent pending

Specifications subject to change
without notice.

SERVICE
For the back-up that keeps you out-front,
call Williams toll-free at 800/621-1253.
In Illinois, call toll-free at 800/572-1324.

Warning—This equipment generates, uses, and can radiate radio frequency energy and if not installed and used in accordance with the instructions manual, may cause interference to radio communications. It has been certified to comply with the limits for a Class A computing device pursuant to Subpart J of Part 15 of FCC Rules, which are designed to provide reasonable protection against such interference when operated in a commercial environment. Operation of this equipment in a residential area is likely to cause interference in which case the user at his own expense will be required to correct the interference.

Williams® ELECTRONICS, INC.
3401 N. California Ave., Chicago, IL 60618
(312) 267-2240, Telex 253095

NOTICE: "BUBBLES" is a trademark of Williams Electronics, Inc.

© 1983, WILLIAMS ELECTRONICS, INC.