Thank You for downloading this manual. I hope it helps you resolve any issues you have had with your game.

This manual was purchased, and scanned by Basement Arcade Associates, www.basementarcade.com and is offered for FREE download at our site.

This PDF is NOT to be distributed on any collection CD / DVD, nor is to be linked to via any other internet site without permission from us. Likewise it is not to be distributed from any other site without our permission.

Abiding by these requests, will insure the continuing support of new manuals added to our site.

All original copyrights held by their original owners, This PDF copyrighted Basement Arcade Associates.

-=Mark=-

www.basementarcade.com

SP-315
1st printing

Pac-Mania

Schematic Package

Supplement to the Operators Manual

ATARI GAMES

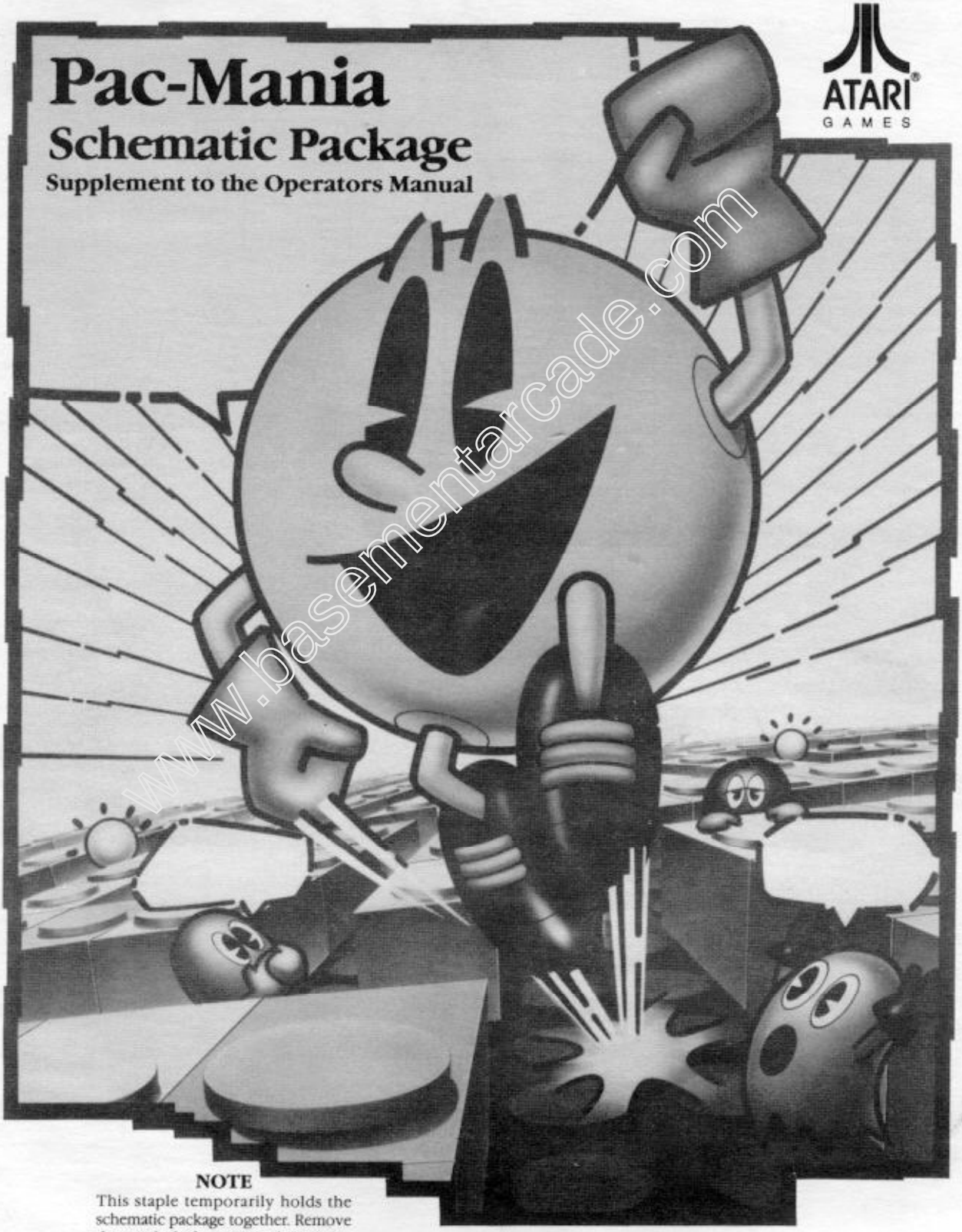

www.basementarcade.com

NOTE

This staple temporarily holds the schematic package together. Remove the staple before using these schematics.

© 1987 Atari Games Corporation. All rights reserved.

Table of Contents

Pac-Mania™ ROM PCB Assembly Schematic Diagram (8 pages) . . . . . Sheets 1B–5A

Pac-Mania CPU PCB Assembly Schematic Diagram (8 pages) . . . . . Sheets 5B–9A

End PCB Assembly Schematic Diagram . . . . . Sheet 9B

Switching/Linear (SL) Power Supply Wiring Diagram and
Astec 5V/12V Switching Power Supply Wiring Diagram . . . . . Sheet 10A

Pac-Mania Main Wiring Diagram and Coin Door Wiring Diagram . . . Sheet 10B

Pac-Mania is engineered and designed by Namco Ltd.
Manufactured by Atari Games. Trademark and © Namco 1987.

www.basementarcade.com

Atari Games Corporation • P.O. Box 361110 • Milpitas, CA 95035 • (408) 434-3950 • Telex 5101007850

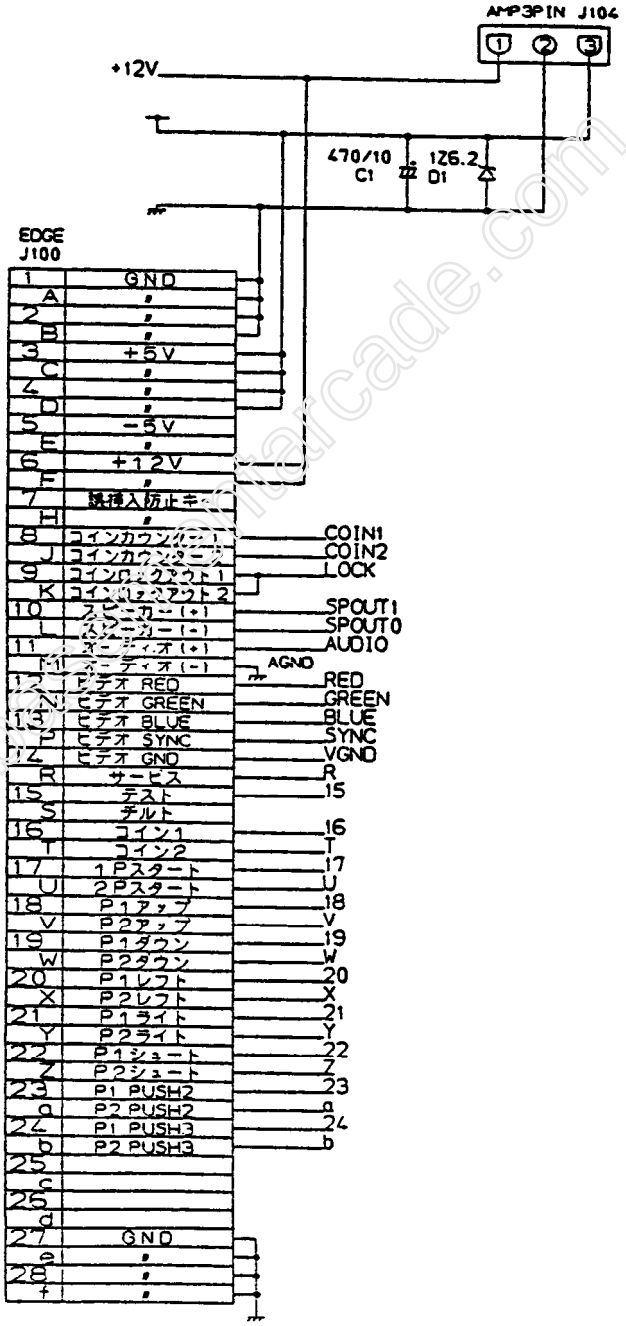
AMP3PIN J104
+12V
470/10
C1
126.2
D1
EDGE
J100
GND
+5V
-5V
+12V
COIN1
COIN2
LOCK
SPOUT1
SPOUT0
AUDIO
AGND
RED
GREEN
BLUE
SYNC
VGND
R
15
16
T
17
U
18
V
19
W
20
X
21
Y
22
Z
23
a
24
b
GND

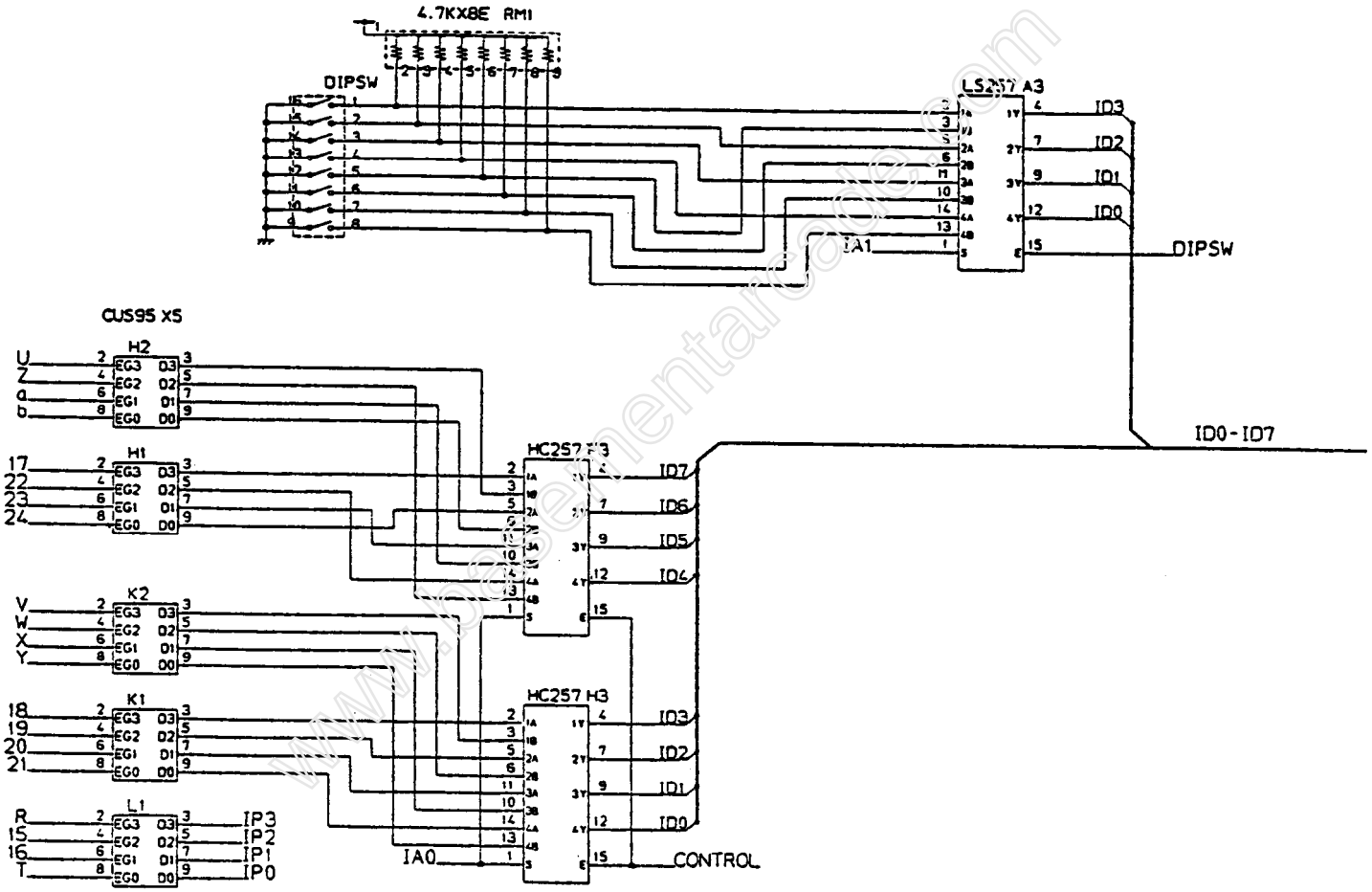

EDGE CONNECTOR & SW INPUT

NOTICE TO ALL PERSONS RECEIVING THIS DRAWING

CONFIDENTIAL: Reproduction forbidden without the specific written permission of Atari Games Corporation, Milpitas, CA. This drawing is only conditionally issued, and neither receipt nor possession thereof confers or transfers any right in, or license to use, the subject matter of the drawing or any design or technical information shown thereon, nor any right to reproduce this drawing or any part thereof. Except for manufacture by vendors of Atari Games Corporation, and for manufacture under the corporation's written license, no right is granted to reproduce this drawing or the subject matter thereof, unless by written agreement with or written permission from the corporation.

ATARI GAMES

Pac-Mania™ ROM PCB Schematic Diagram—Page 1

© 1987 Atari Games Corporation

SP-315 Sheet 1B
1st printing

99-090356

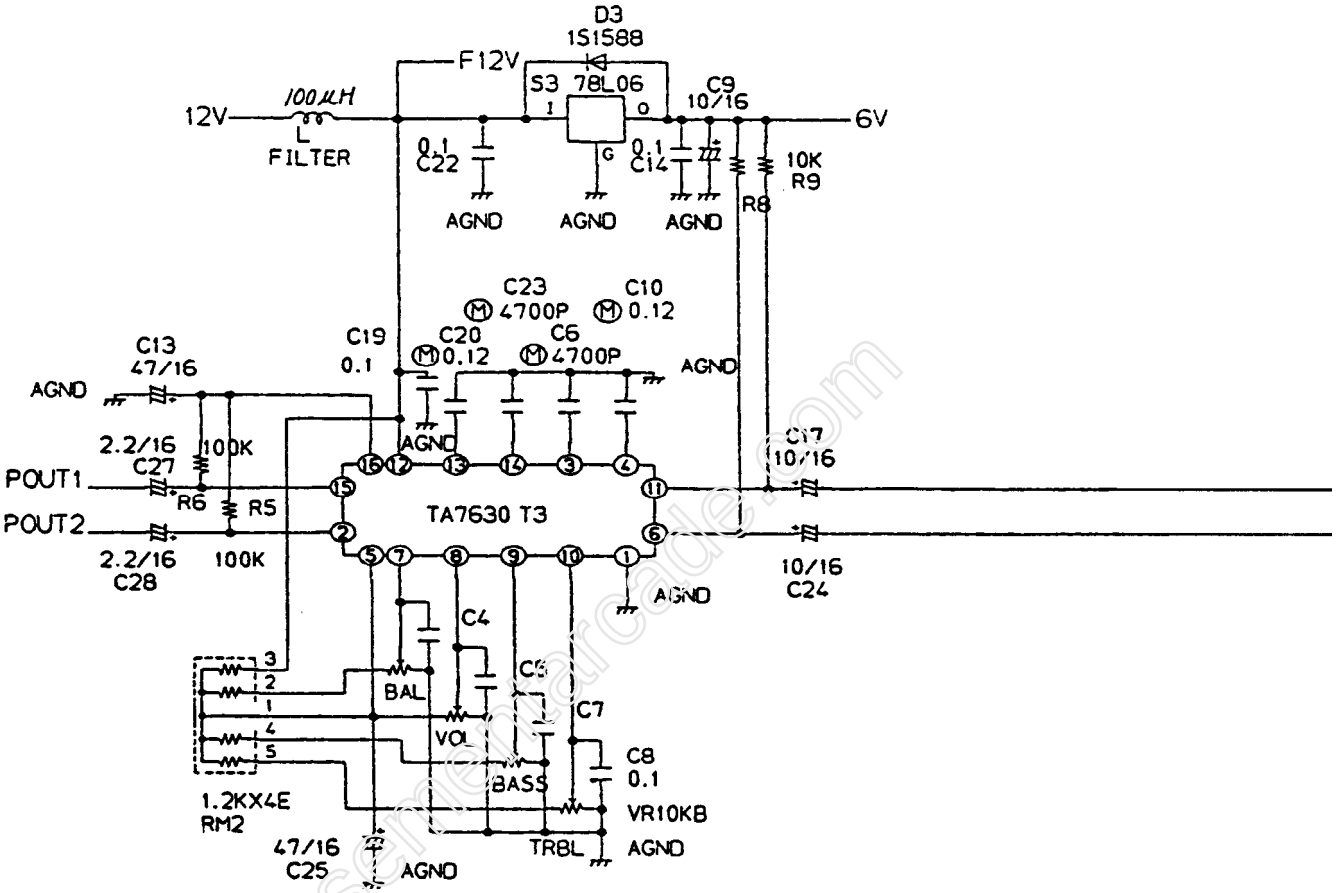

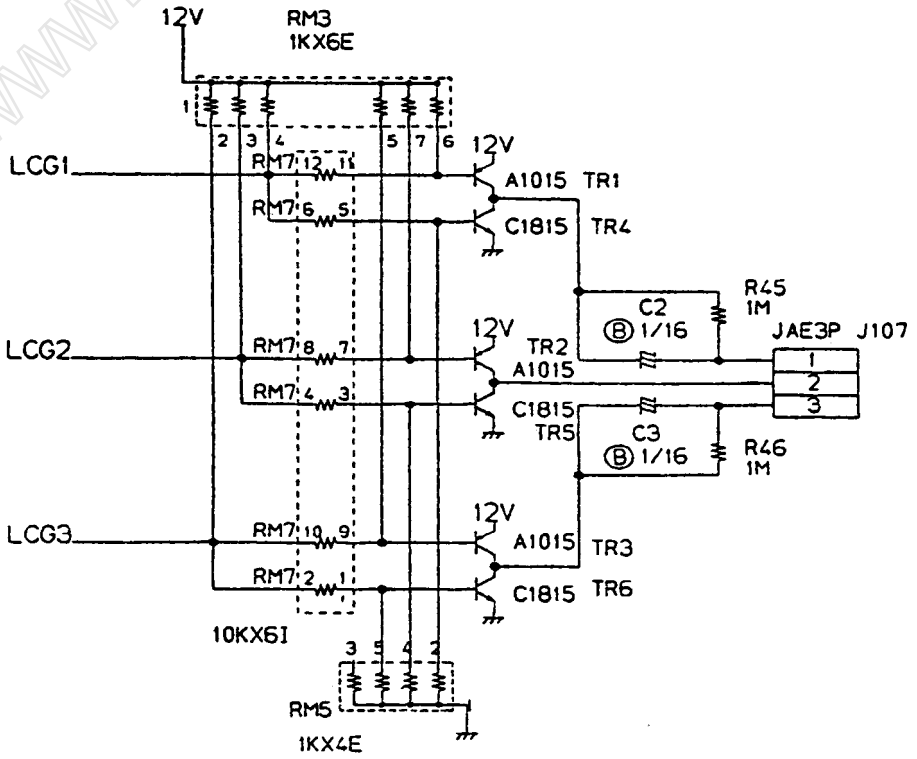

www.basementarcade.com

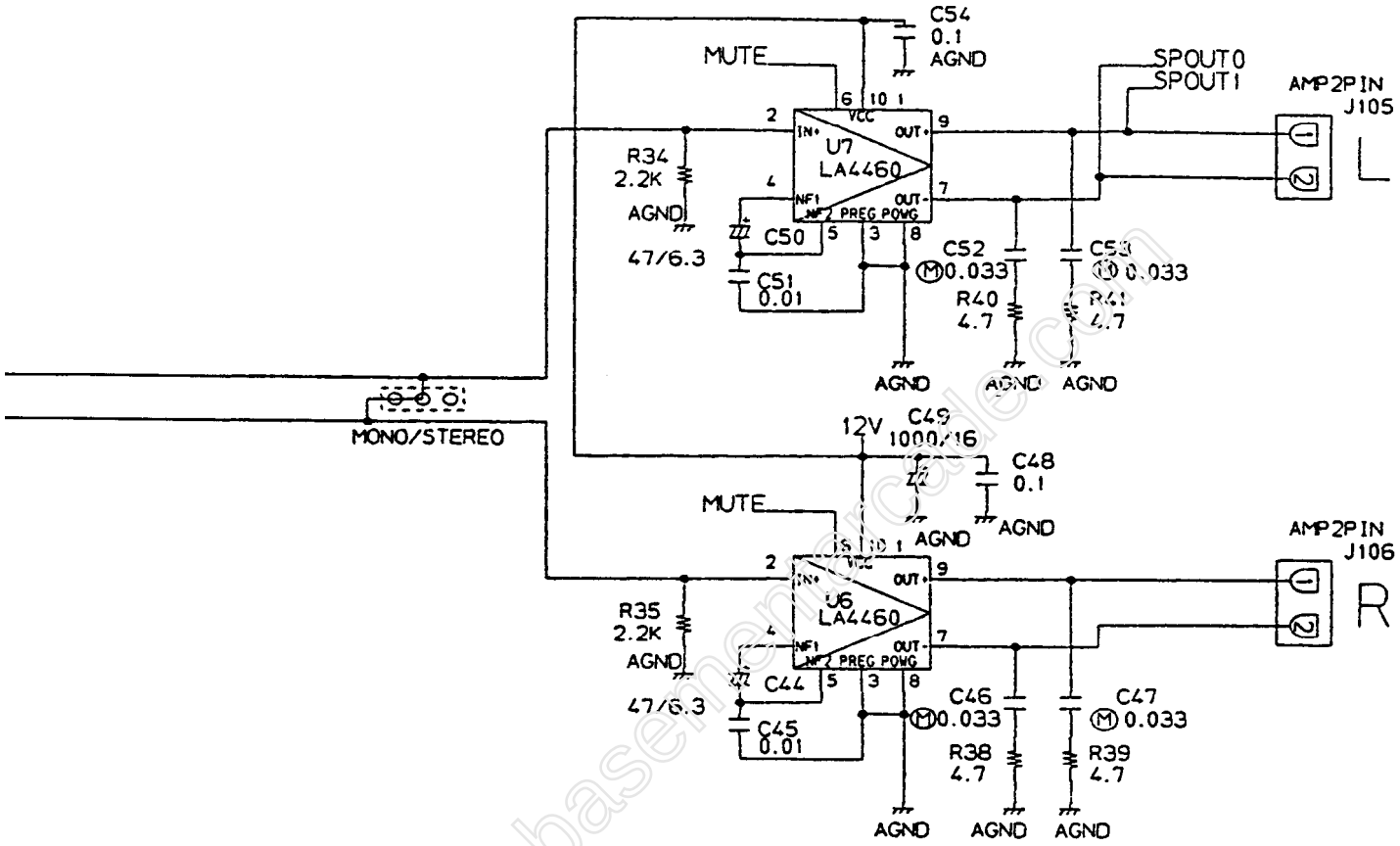

AUDIO AMP & 3D GRASS DRIVER

NOTICE TO ALL PERSONS RECEIVING THIS DRAWING

CONFIDENTIAL: Reproduction forbidden without the specific written permission of Atari Games Corporation, Milpitas, CA. This drawing is only conditionally issued, and neither receipt nor possession thereof confers or transfers any right in, or license to use, the subject matter of the drawing or any design or technical information shown thereon, nor any right to reproduce this drawing or any part thereof. Except for manufacture by vendors of Atari Games Corporation, and for manufacture under the corporation's written license, no right is granted to reproduce this drawing or the subject matter thereof, unless by written agreement with or written permission from the corporation.

ATARI® GAMES

Pac-Mania™ ROM PCB
Schematic Diagram—Page 2

© 1987 Atari Games Corporation

SP-315 Sheet 2A
1st printing

99-090356

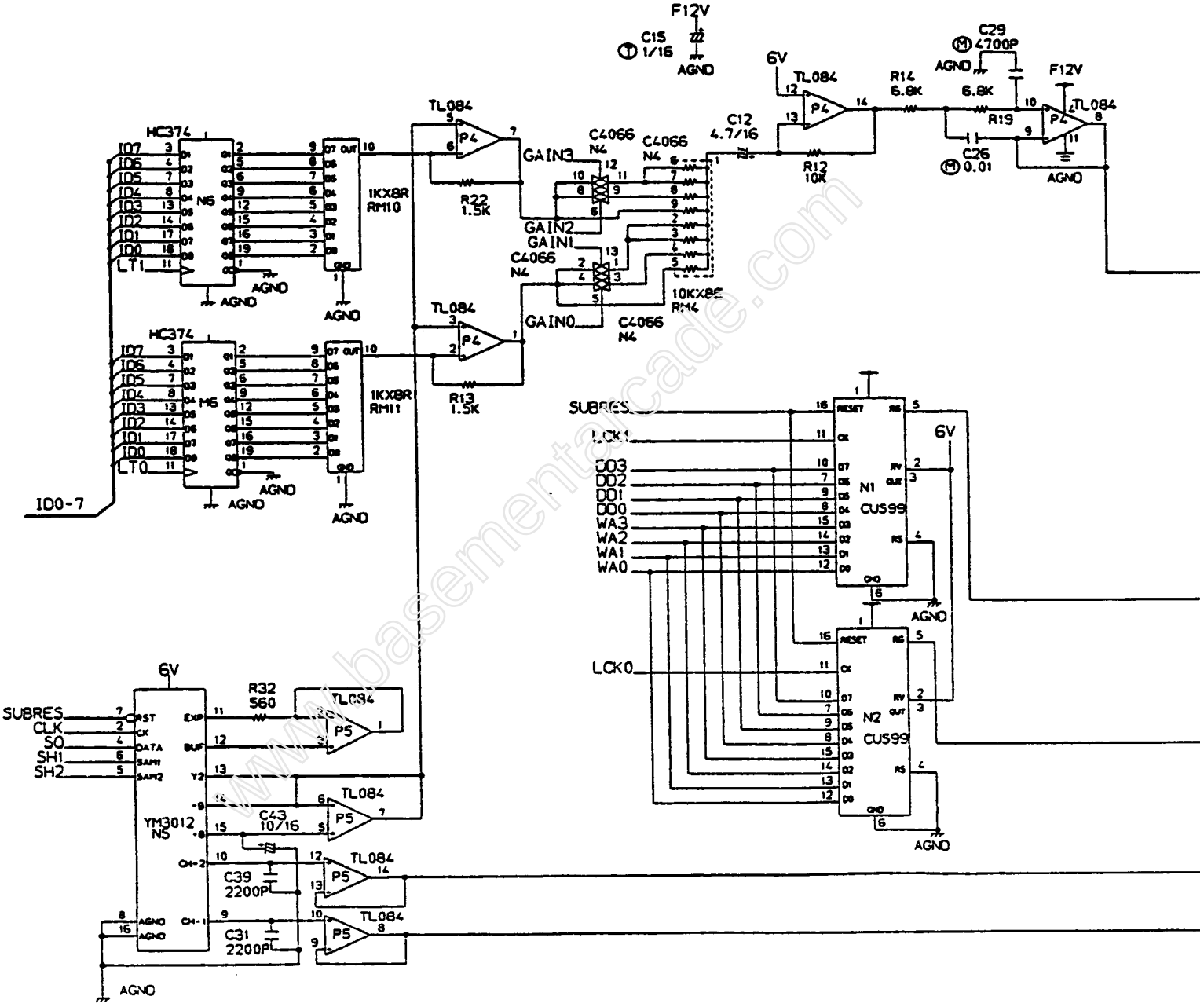

www.basementarcade.com

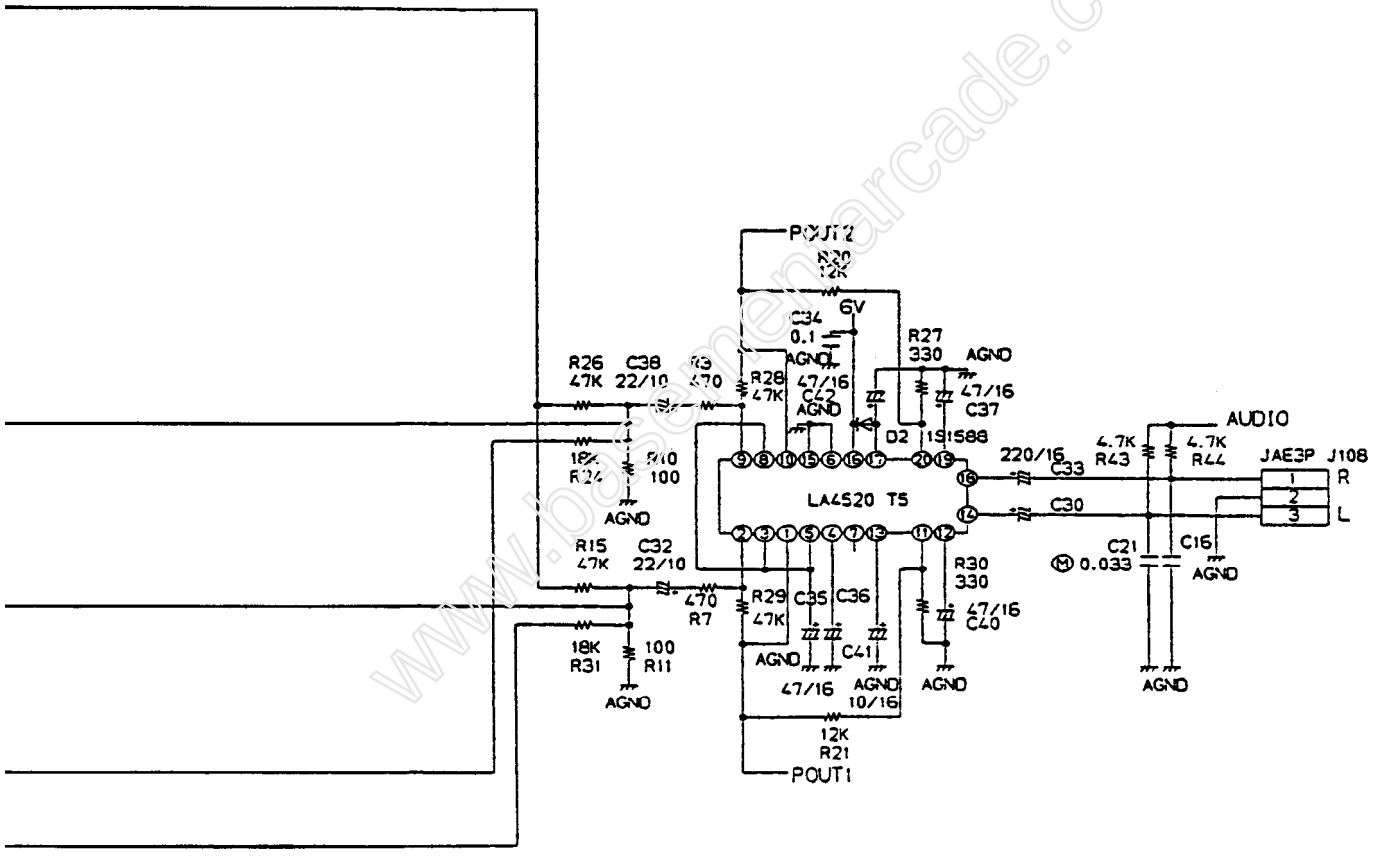

SOUND MIX & HEAD PHONE AMP

NOTICE TO ALL PERSONS RECEIVING THIS DRAWING

CONFIDENTIAL: Reproduction forbidden without the specific written permission of Atari Games Corporation, Milpitas, CA. This drawing is only conditionally issued, and neither receipt nor possession thereof confers or transfers any right in, or license to use, the subject matter of the drawing or any design or technical information shown thereon, nor any right to reproduce this drawing or any part thereof. Except for manufacture by vendors of Atari Games Corporation, and for manufacture under the corporation's written license, no right is granted to reproduce this drawing or the subject matter thereof, unless by written agreement with or written permission from the corporation.

ATARI® GAMES

Pac-Mania™ ROM PCB
Schematic Diagram—Page 3

© 1987 Atari Games Corporation

SP-315 Sheet 2B
1st printing

99-090356

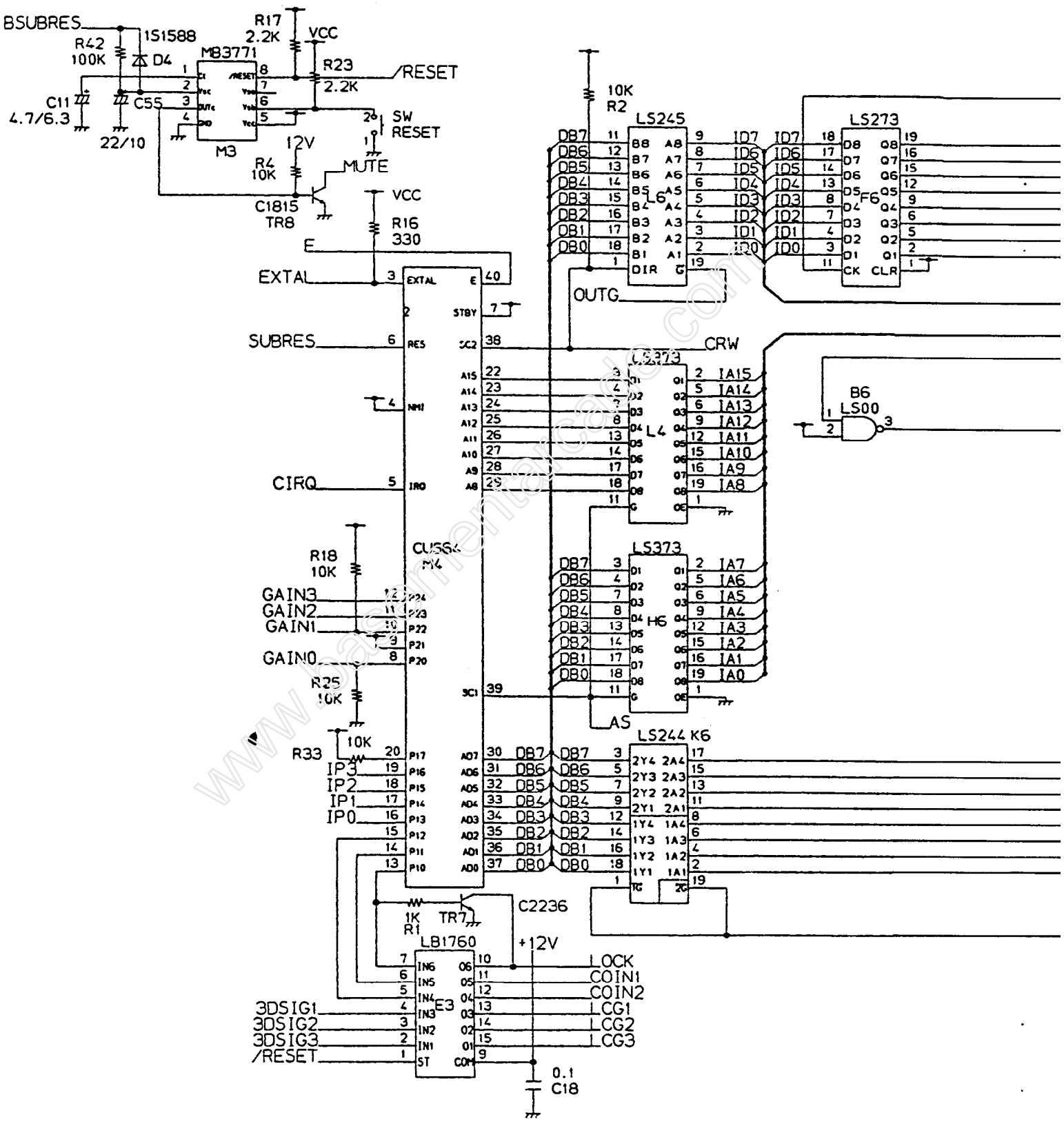
BSUBRES
1S1588
R42
100K
D4
C11
4.7/6.3
C55
22/10
M3
MB3771
R17
2.2K
VCC
R23
2.2K
/RESET
SW
RESET
12V
R4
10K
MUTE
C1815
TR8
VCC
R16
330
E
EXTAL
SUBRES
CIRQ
R18
10K
GAIN3
GAIN2
GAIN1
GAIN0
R25
10K
R33
10K
IP3
IP2
IP1
IP0
1K
R1
TR7
C2236
LB1760
E3
+12V
3DSIG1
3DSIG2
3DSIG3
/RESET
LOCK
COIN1
COIN2
LCG1
LCG2
LCG3
0.1
C18
10K
R2
LS245
L6
LS273
F6
OUTG
CRW
LS373
L4
LS373
H6
AS
B6
LS00
LS244 K6

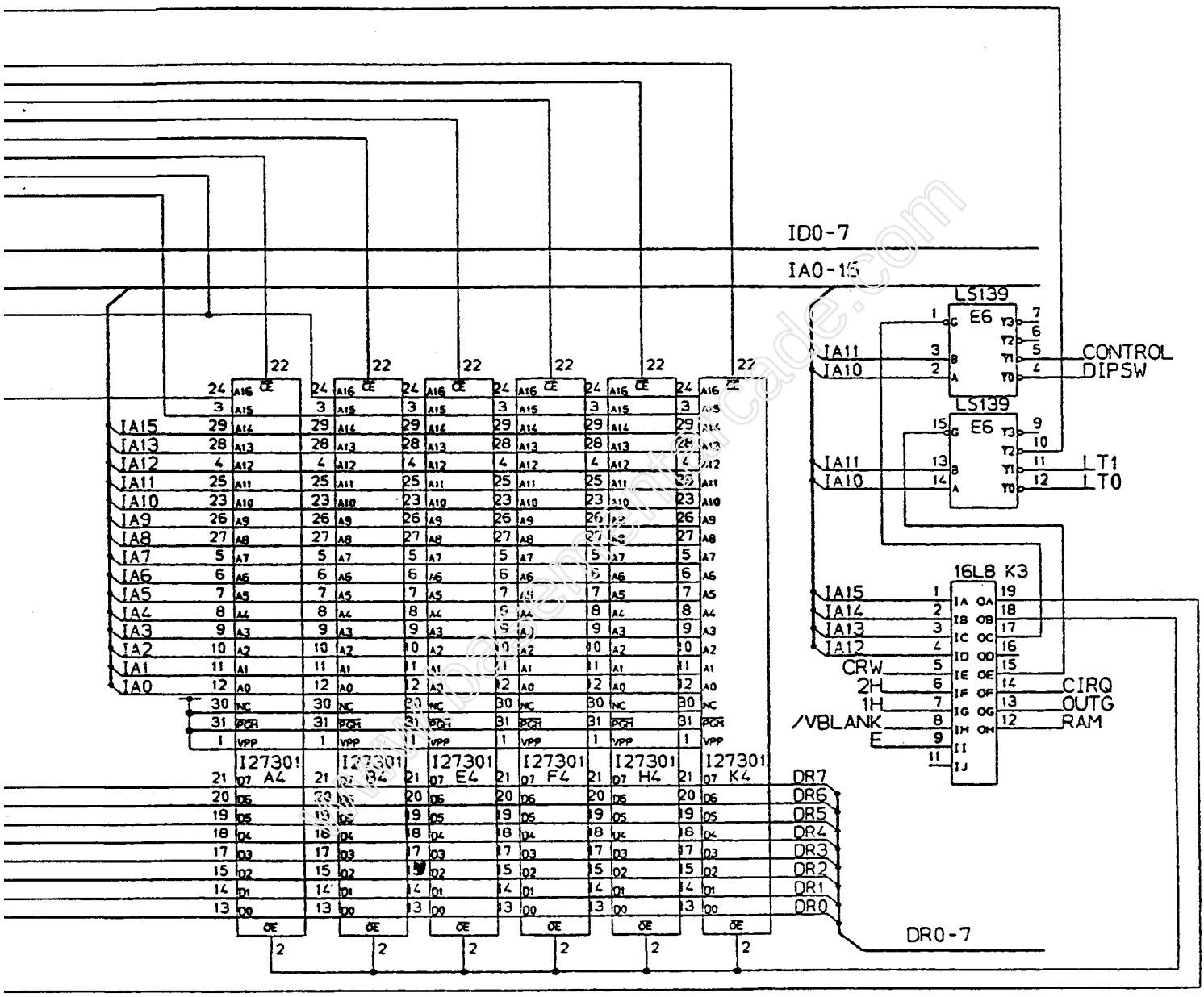

RESET, VOICE ROM

NOTICE TO ALL PERSONS RECEIVING THIS DRAWING

CONFIDENTIAL: Reproduction forbidden without the specific written permission of Atari Games Corporation, Milpitas, CA. This drawing is only conditionally issued, and neither receipt nor possession thereof confers or transfers any right in, or license to use, the subject matter of the drawing or any design or technical information shown thereon, nor any right to reproduce this drawing or any part thereof. Except for manufacture by vendors of Atari Games Corporation, and for manufacture under the corporation's written license, no right is granted to reproduce this drawing or the subject matter thereof, unless by written agreement with or written permission from the corporation.

ATARI GAMES

Pac-Mania™ ROM PCB Schematic Diagram—Page 4

© 1987 Atari Games Corporation

SP-315 Sheet 3A
1st printing

99-090356

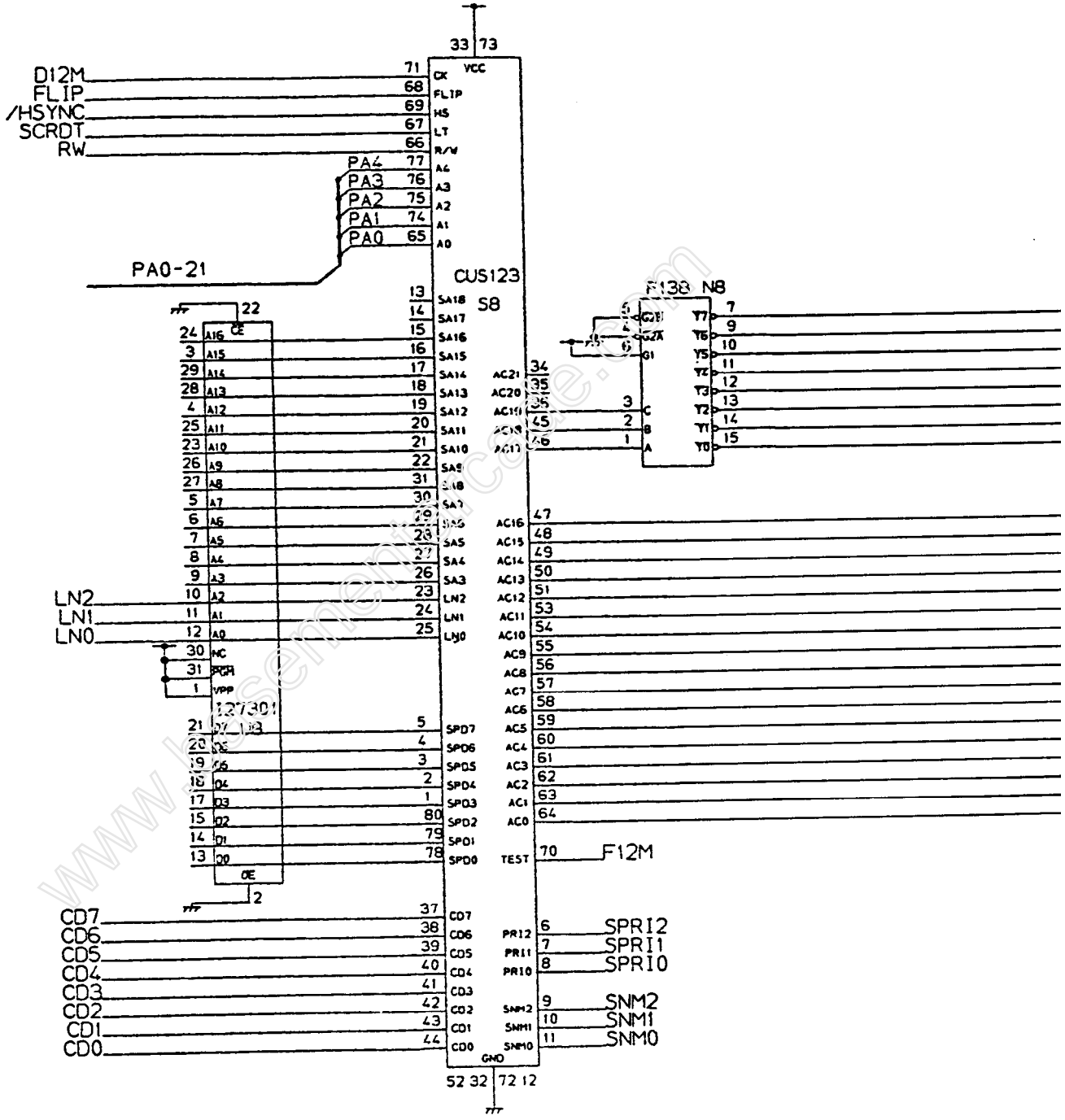

D12M
FLIP
/HSYNC
SCRDT
RW
PA4
PA3
PA2
PA1
PA0
PA0-21
CUS123
S8
F138 N8
LN2
LN1
LN0
CD7
CD6
CD5
CD4
CD3
CD2
CD1
CD0
F12M
SPRI2
SPRI1
SPRI0
SNM2
SNM1
SNM0

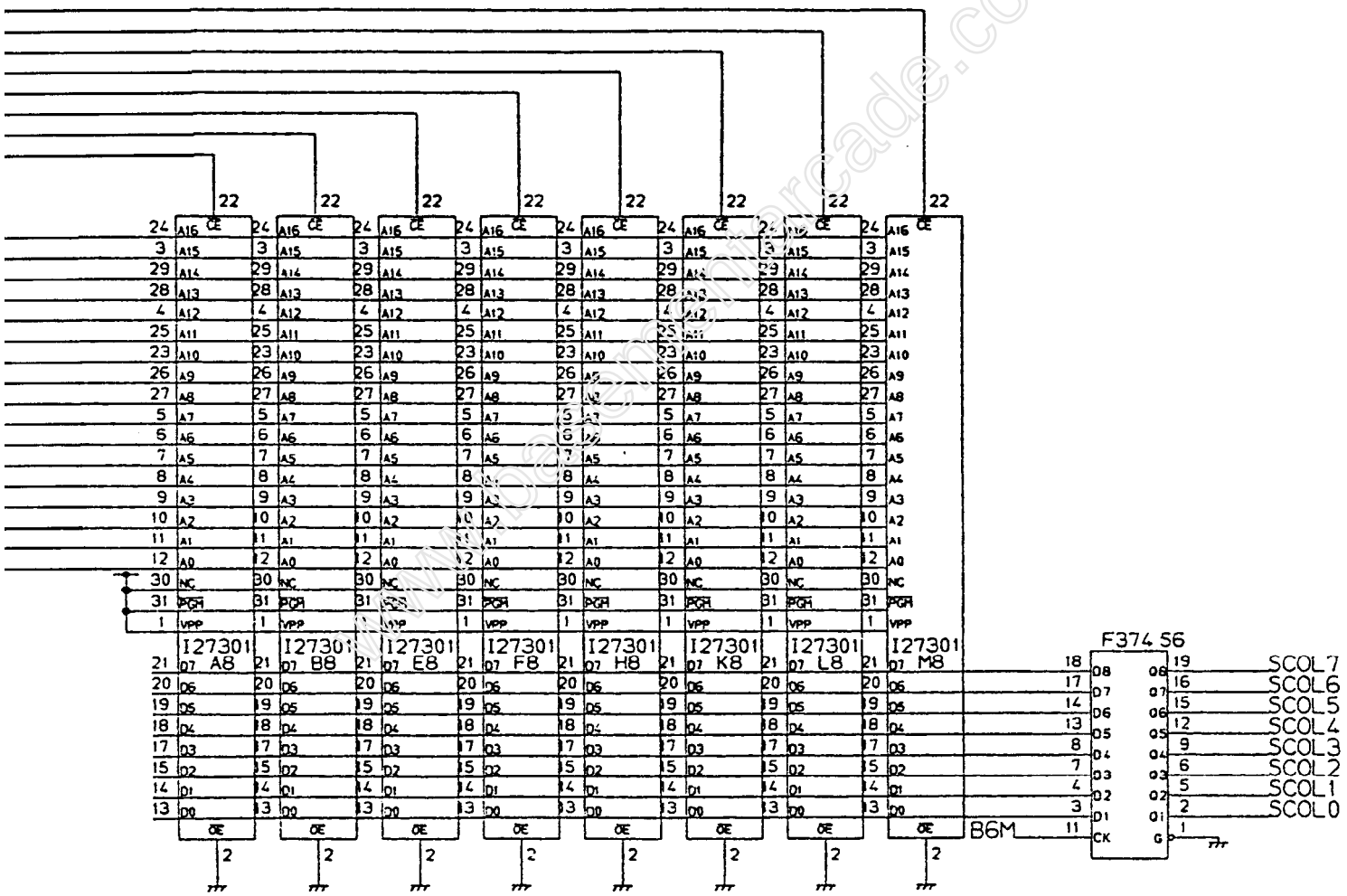

SCROLL SCREEN CHARACTER ROM

NOTICE TO ALL PERSONS RECEIVING THIS DRAWING

CONFIDENTIAL: Reproduction forbidden without the specific written permission of Atari Games Corporation, Milpitas, CA. This drawing is only conditionally issued, and neither receipt nor possession thereof confers or transfers any right in, or license to use, the subject matter of the drawing or any design or technical information shown thereon, nor any right to reproduce this drawing or any part thereof. Except for manufacture by vendors of Atari Games Corporation, and for manufacture under the corporation's written license, no right is granted to reproduce this drawing or the subject matter thereof, unless by written agreement with or written permission from the corporation.

ATARI® GAMES

Pac-Mania™ ROM PCB
Schematic Diagram—Page 5

© 1987 Atari Games Corporation

SP-315 Sheet 3B
1st printing

99-090356

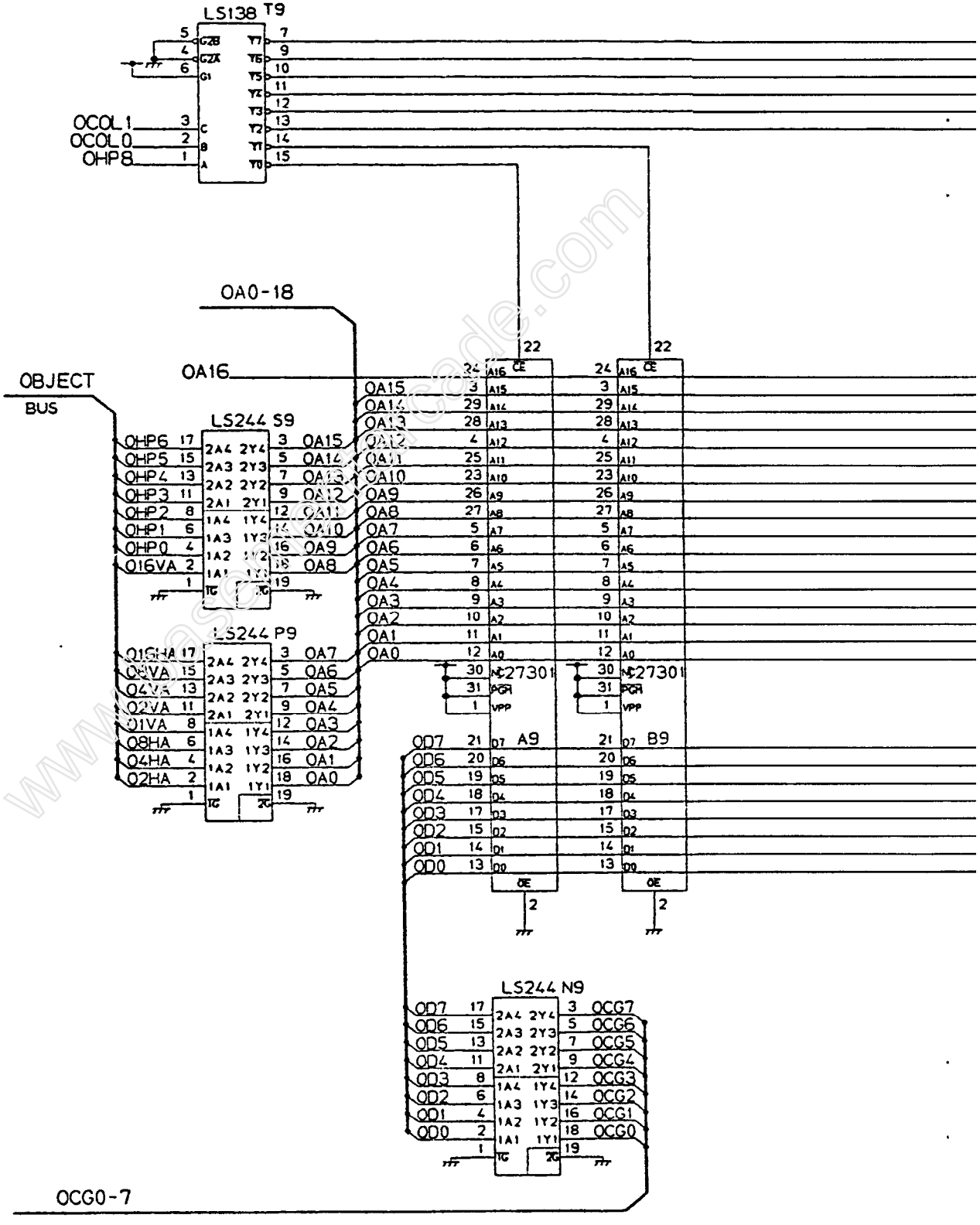
LS138 T9
OCOL1
OCOL0
OHP8
OA0-18
OA16
OBJECT
BUS
LS244 S9
LS244 P9
LS244 N9
A9
B9
OCG0-7

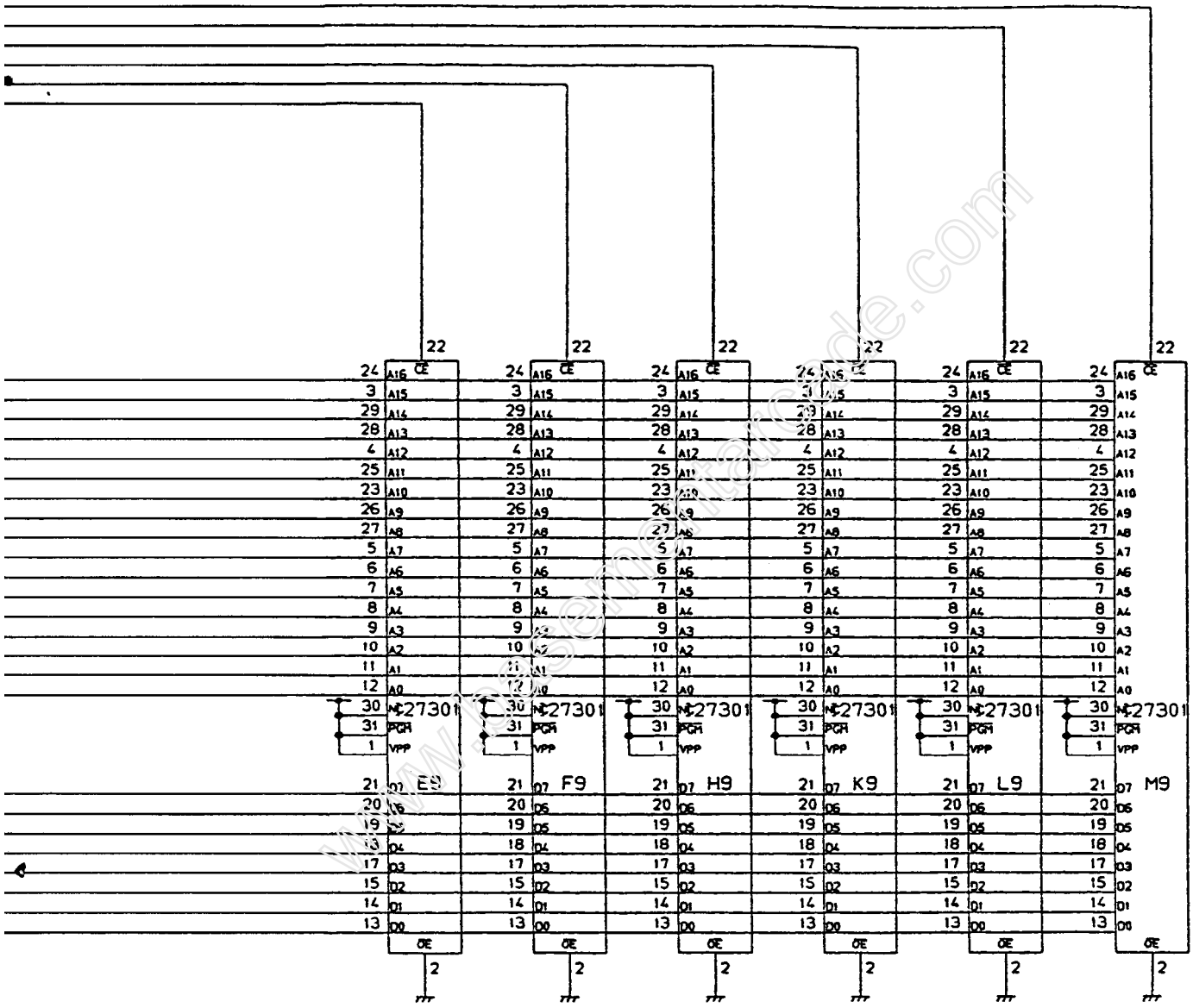

OBJECT CHARACTER ROM

NOTICE TO ALL PERSONS RECEIVING THIS DRAWING

CONFIDENTIAL: Reproduction forbidden without the specific written permission of Atari Games Corporation, Milpitas, CA. This drawing is only conditionally issued, and neither receipt nor possession thereof confers or transfers any right in, or license to use, the subject matter of the drawing or any design or technical information shown thereon, nor any right to reproduce this drawing or any part thereof. Except for manufacture by vendors of Atari Games Corporation, and for manufacture under the corporation's written license, no right is granted to reproduce this drawing or the subject matter thereof, unless by written agreement with or written permission from the corporation.

ATARI® GAMES

Pac-Mania™ ROM PCB Schematic Diagram—Page 6

© 1987 Atari Games Corporation

SP-315 Sheet 4A
1st printing

99-090356

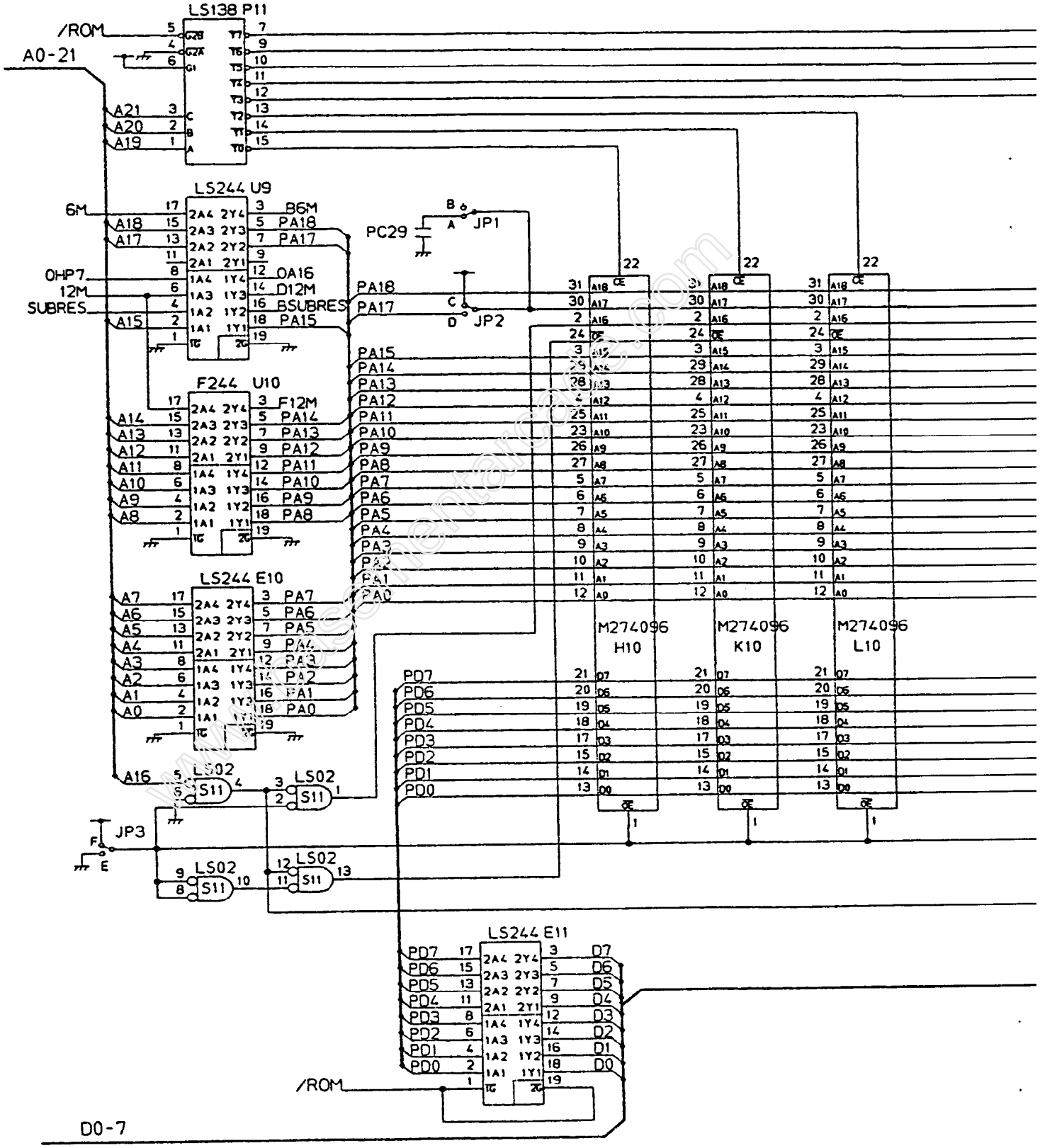
LS138 P11
/ROM
A0-21
A21
A20
A19
LS244 U9
6M
A18
A17
0HP7
12M
SUBRES
A15
B6M
PA18
PA17
OA16
D12M
BSUBRES
PA15
F244 U10
A14
A13
A12
A11
A10
A9
A8
F12M
PA14
PA13
PA12
PA11
PA10
PA9
PA8
LS244 E10
A7
A6
A5
A4
A3
A2
A1
A0
PA7
PA6
PA5
PA4
PA3
PA2
PA1
PA0
PC29
JP1
JP2
JP3
LS02
A16
PA15
PA14
PA13
PA12
PA11
PA10
PA9
PA8
PA7
PA6
PA5
PA4
PA3
PA2
PA1
PA0
M274096
H10
K10
L10
PD7
PD6
PD5
PD4
PD3
PD2
PD1
PD0
LS244 E11
D7
D6
D5
D4
D3
D2
D1
D0
/ROM
D0-7

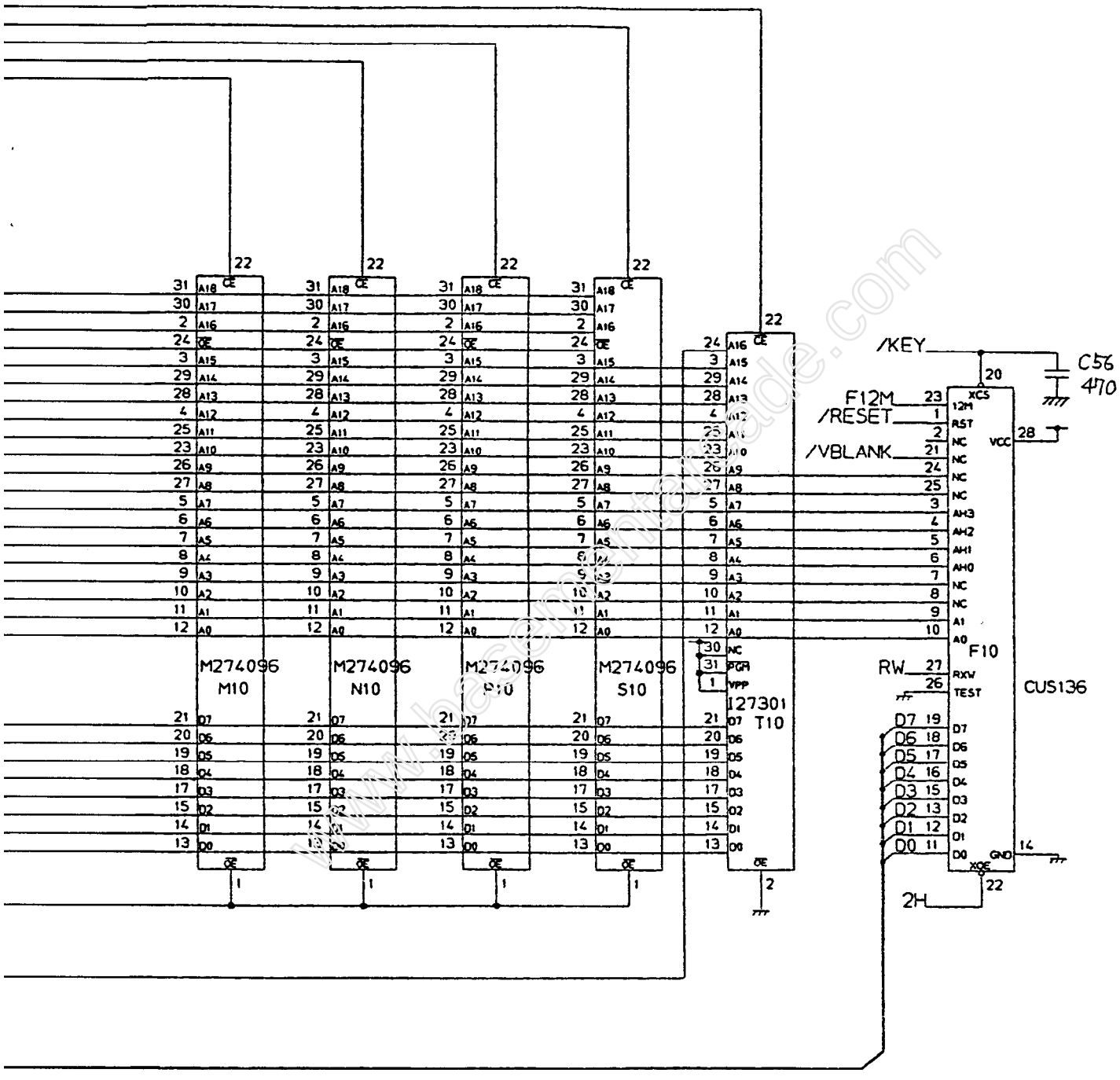

PROGRAM ROM

NOTICE TO ALL PERSONS RECEIVING THIS DRAWING

CONFIDENTIAL: Reproduction forbidden without the specific written permission of Atari Games Corporation, Milpitas, CA. This drawing is only conditionally issued, and neither receipt nor possession thereof confers or transfers any right in, or license to use, the subject matter of the drawing or any design or technical information shown thereon, nor any right to reproduce this drawing or any part thereof. Except for manufacture by vendors of Atari Games Corporation, and for manufacture under the corporation's written license, no right is granted to reproduce this drawing or the subject matter thereof, unless by written agreement with or written permission from the corporation.

ATARI® GAMES

Pac-Mania™ ROM PCB
Schematic Diagram—Page 7

© 1987 Atari Games Corporation

SP-315 Sheet 4B
1st printing

99-090356

SND0-7, SNA0-13

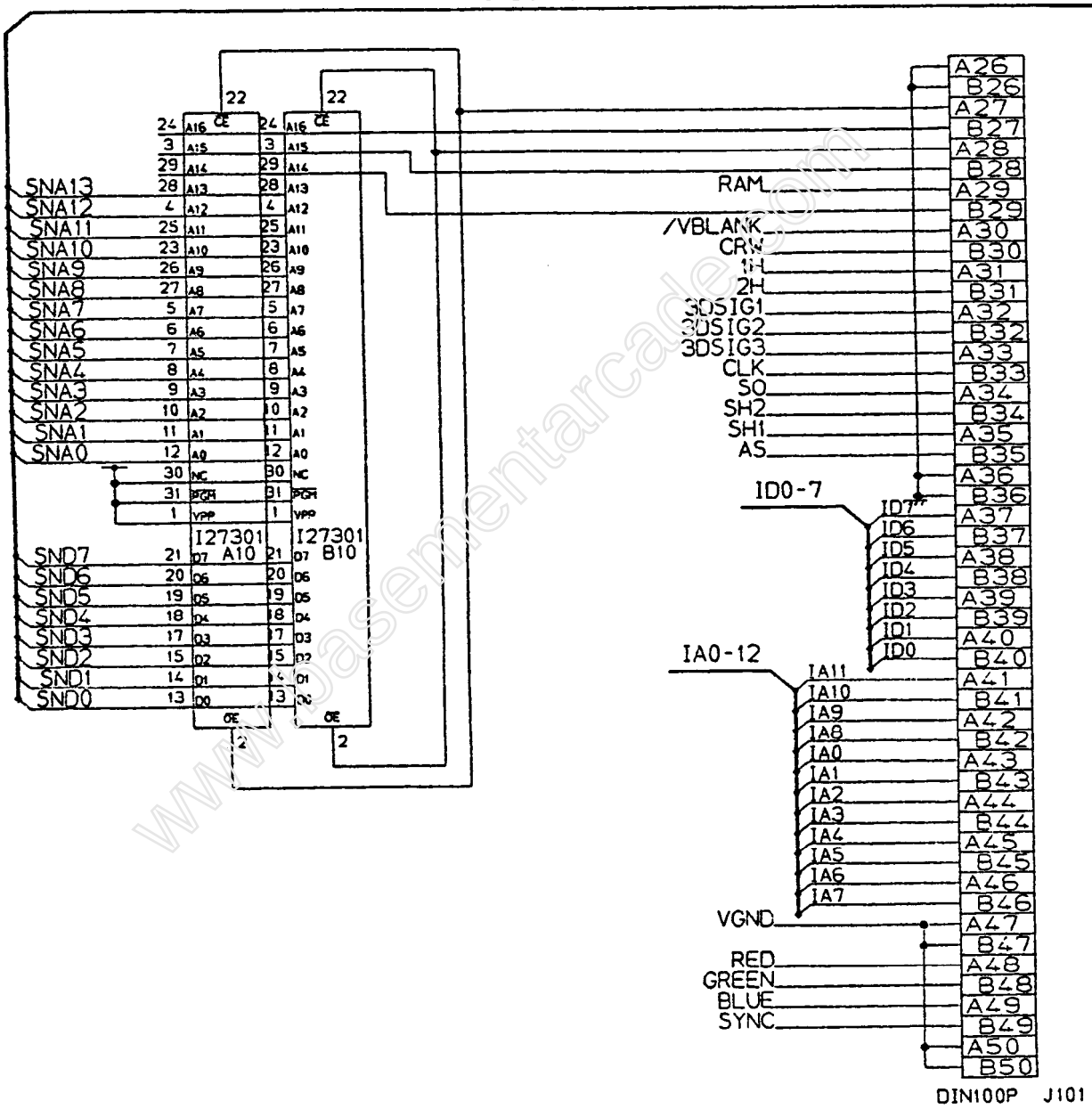

www.basementarcade.com

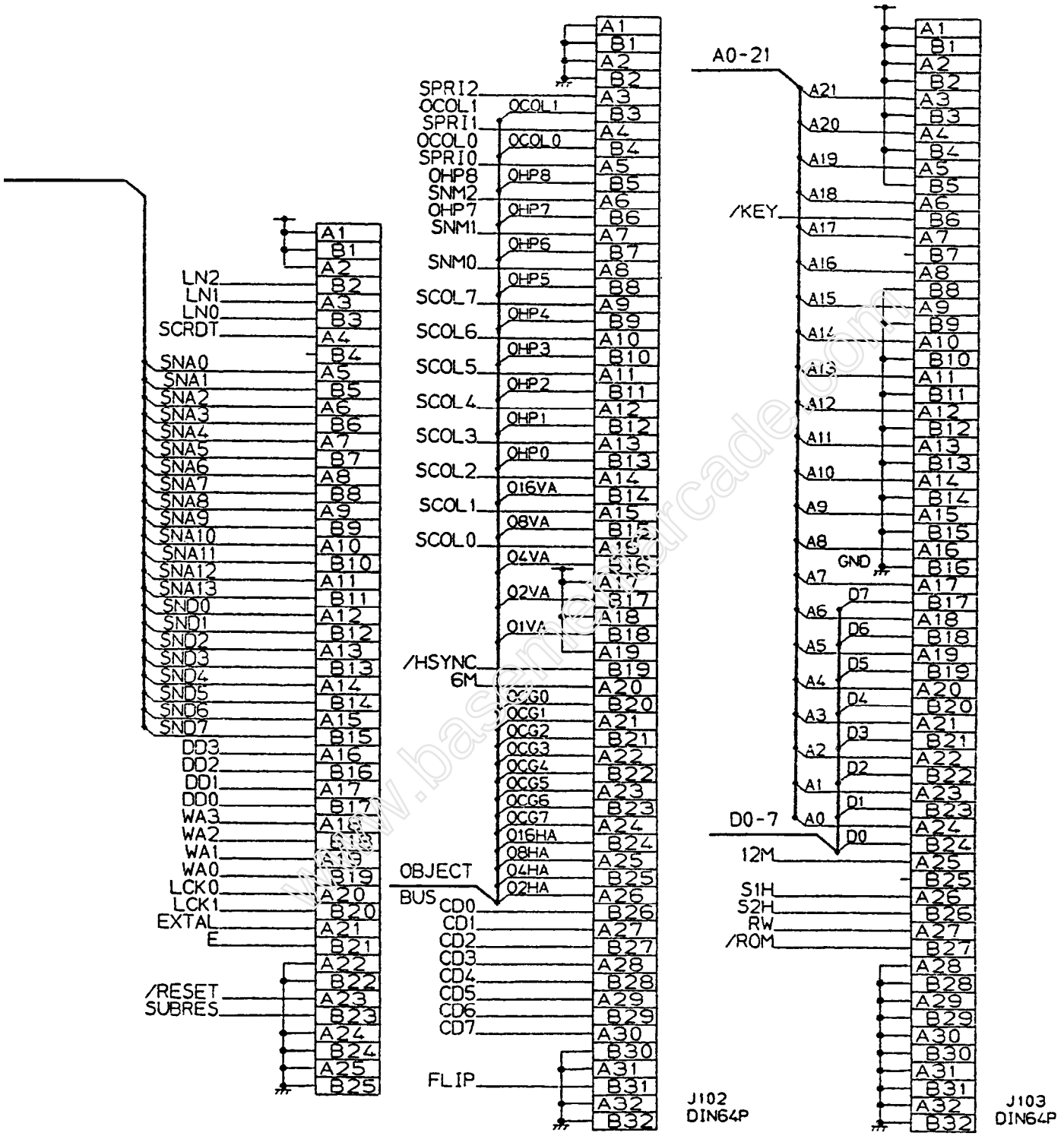

DIN CONNECTOR, SOUND RAM

NOTICE TO ALL PERSONS RECEIVING THIS DRAWING

CONFIDENTIAL: Reproduction forbidden without the specific written permission of Atari Games Corporation, Milpitas, CA. This drawing is only conditionally issued, and neither receipt nor possession thereof confers or transfers any right in, or license to use, the subject matter of the drawing or any design or technical information shown thereon, nor any right to reproduce this drawing or any part thereof. Except for manufacture by vendors of Atari Games Corporation, and for manufacture under the corporation's written license, no right is granted to reproduce this drawing or the subject matter thereof, unless by written agreement with or written permission from the corporation.

ATARI GAMES

Pac-Mania™ ROM PCB
Schematic Diagram—Page 8

© 1987 Atari Games Corporation

SP-315 Sheet 5A
1st printing

99-090356

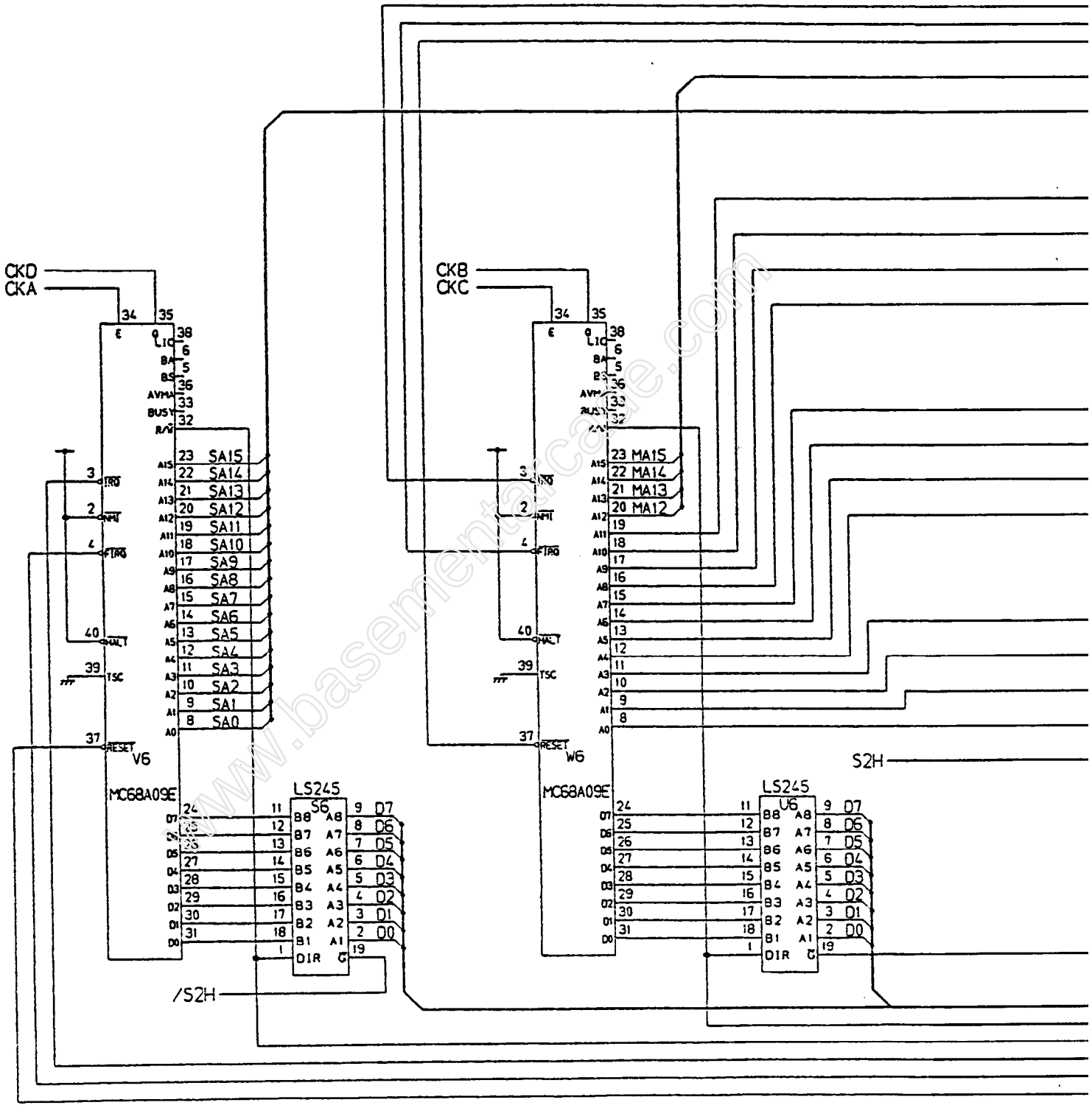
CKD
CKA
CKB
CKC
V6
W6
MC68A09E
LS245
S6
U6
SA15
SA14
SA13
SA12
SA11
SA10
SA9
SA8
SA7
SA6
SA5
SA4
SA3
SA2
SA1
SA0
MA15
MA14
MA13
MA12
D7
D6
D5
D4
D3
D2
D1
D0
/S2H
S2H
IRQ
NMI
TRG
HALT
TSC
RESET
DIR

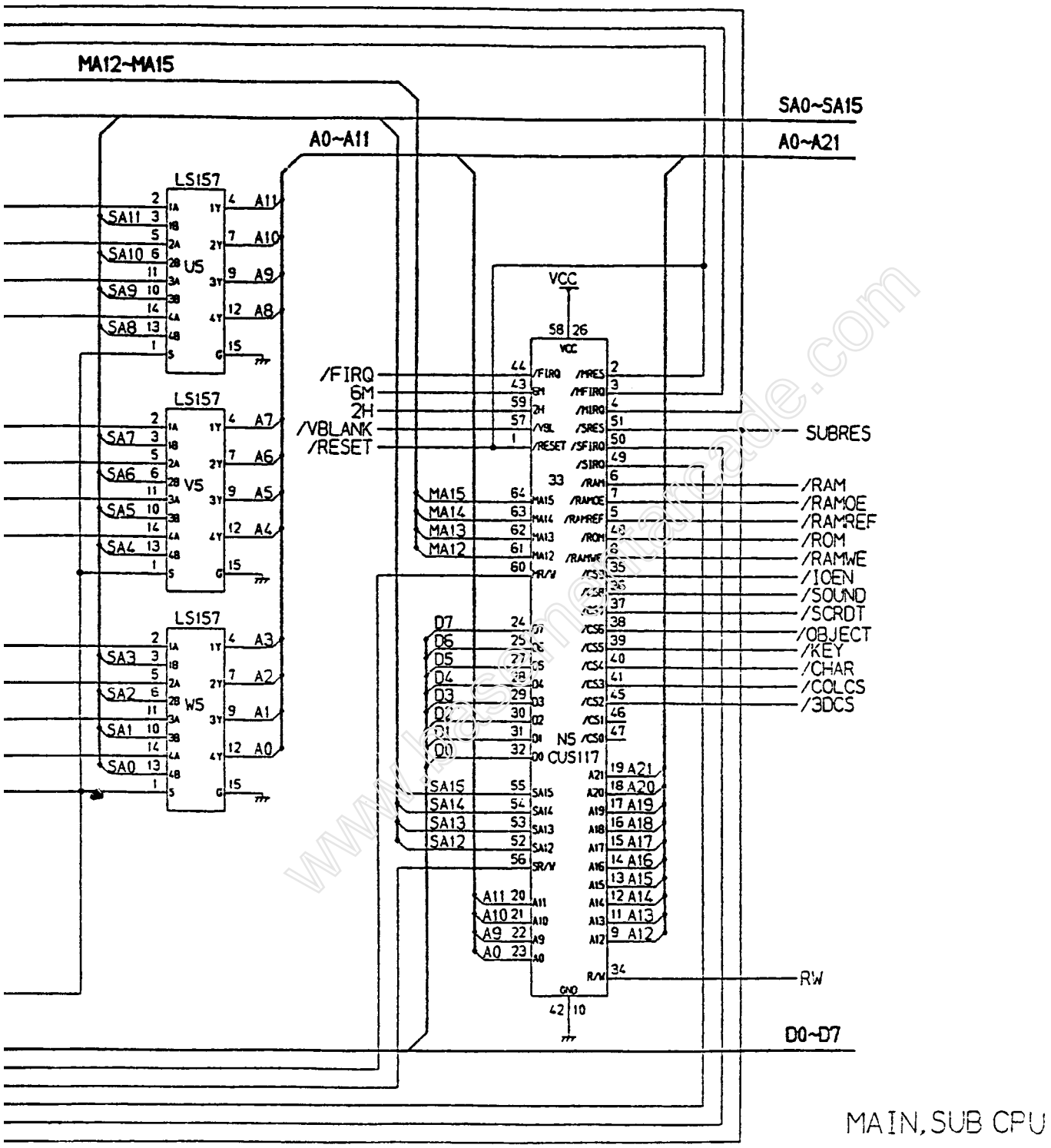

MAIN, SUB CPU

NOTICE TO ALL PERSONS RECEIVING THIS DRAWING

CONFIDENTIAL: Reproduction forbidden without the specific written permission of Atari Games Corporation, Milpitas, CA. This drawing is only conditionally issued, and neither receipt nor possession thereof confers or transfers any right in, or license to use, the subject matter of the drawing or any design or technical information shown thereon, nor any right to reproduce this drawing or any part thereof. Except for manufacture by vendors of Atari Games Corporation, and for manufacture under the corporation's written license, no right is granted to reproduce this drawing or the subject matter thereof, unless by written agreement with or written permission from the corporation.

ATARI® GAMES

Pac-Mania™ CPU PCB Schematic Diagram—Page 1

© 1987 Atari Games Corporation

SP-315 Sheet 5B
1st printing

99-090286

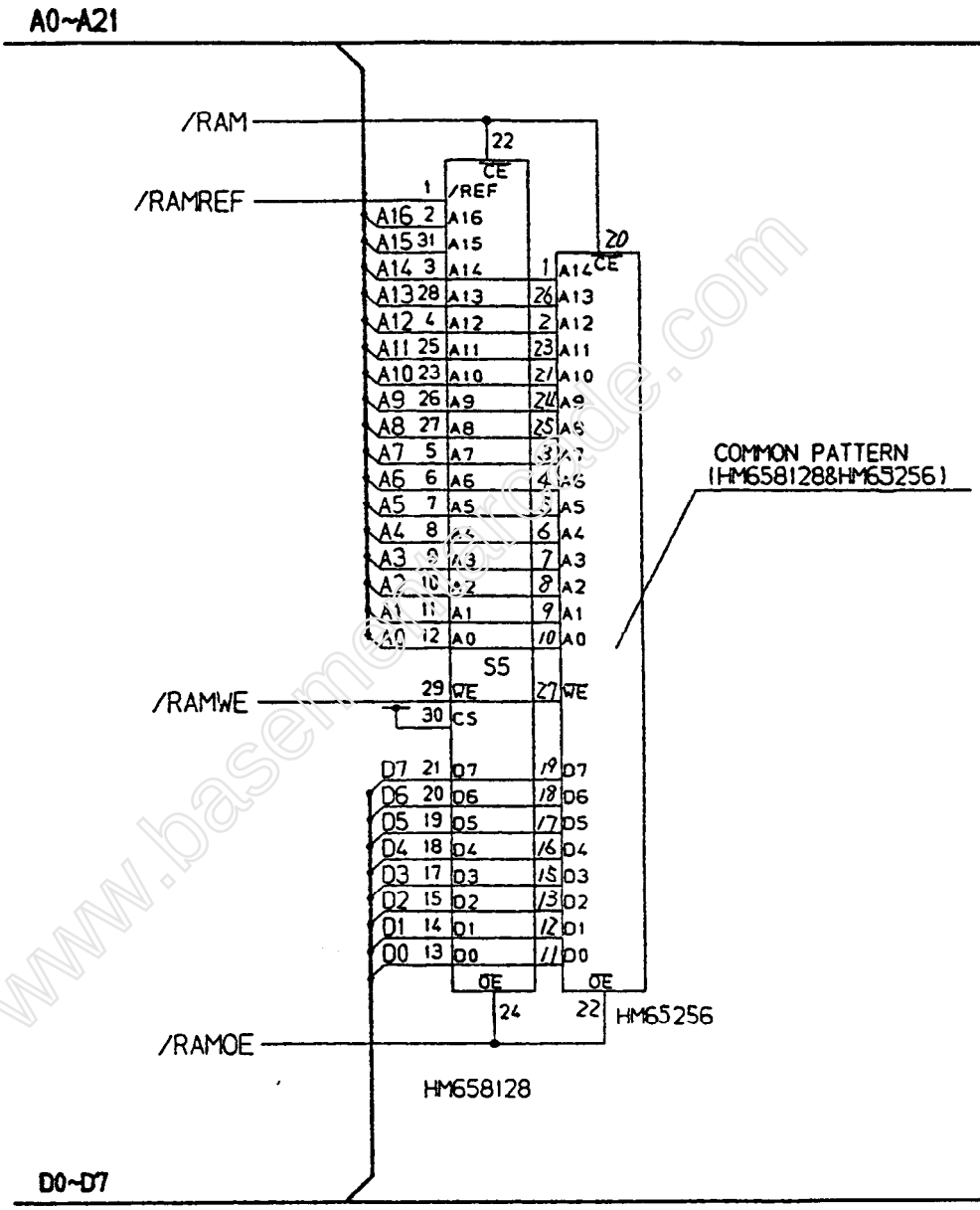
A0~A21
/RAM
/RAMREF
/RAMWE
/RAMOE
D0~D7
22
CE
/REF
A16 2 A16
A15 31 A15
A14 3 A14
A13 28 A13
A12 4 A12
A11 25 A11
A10 23 A10
A9 26 A9
A8 27 A8
A7 5 A7
A6 6 A6
A5 7 A5
A4 8 A4
A3 9 A3
A2 10 A2
A1 11 A1
A0 12 A0
S5
29 WE
30 CS
D7 21 D7
D6 20 D6
D5 19 D5
D4 18 D4
D3 17 D3
D2 15 D2
D1 14 D1
D0 13 D0
OE
24
HM658128
20
CE
1 A14
26 A13
2 A12
23 A11
21 A10
24 A9
25 A8
3 A7
4 A6
5 A5
6 A4
7 A3
8 A2
9 A1
10 A0
27 WE
19 D7
18 D6
17 D5
16 D4
15 D3
13 D2
12 D1
11 D0
OE
22
HM65256
COMMON PATTERN
(HM658128&HM65256)

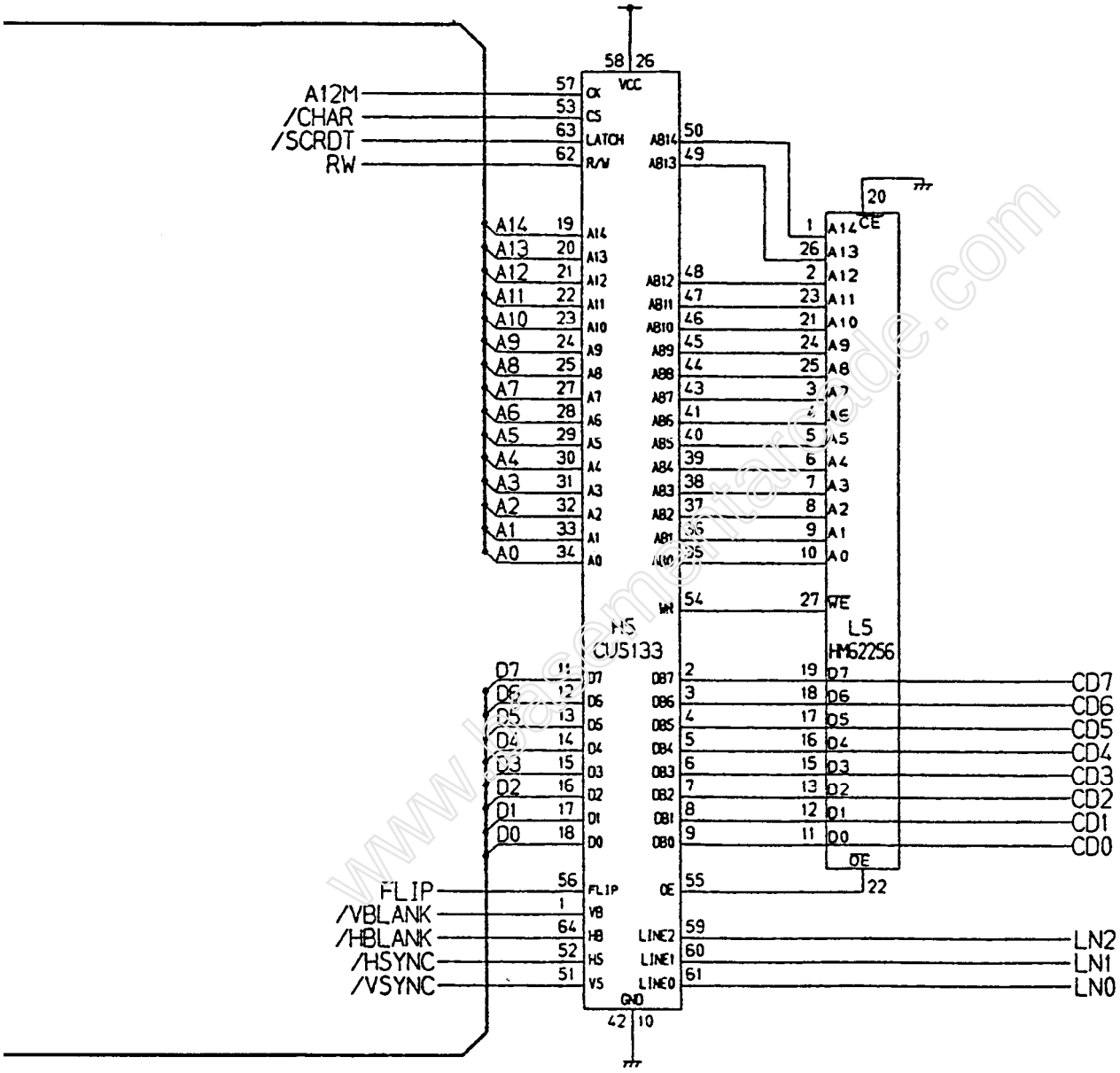

WORK RAM, SCROLL ADDRESSER

NOTICE TO ALL PERSONS RECEIVING THIS DRAWING

CONFIDENTIAL: Reproduction forbidden without the specific written permission of Atari Games Corporation, Milpitas, CA. This drawing is only conditionally issued, and neither receipt nor possession thereof confers or transfers any right in, or license to use, the subject matter of the drawing or any design or technical information shown thereon, nor any right to reproduce this drawing or any part thereof. Except for manufacture by vendors of Atari Games Corporation, and for manufacture under the corporation's written license, no right is granted to reproduce this drawing or the subject matter thereof, unless by written agreement with or written permission from the corporation.

ATARI® GAMES

Pac-Mania™ CPU PCB
Schematic Diagram—Page 2

© 1987 Atari Games Corporation

SP-315 Sheet 6A
1st printing

99-090286

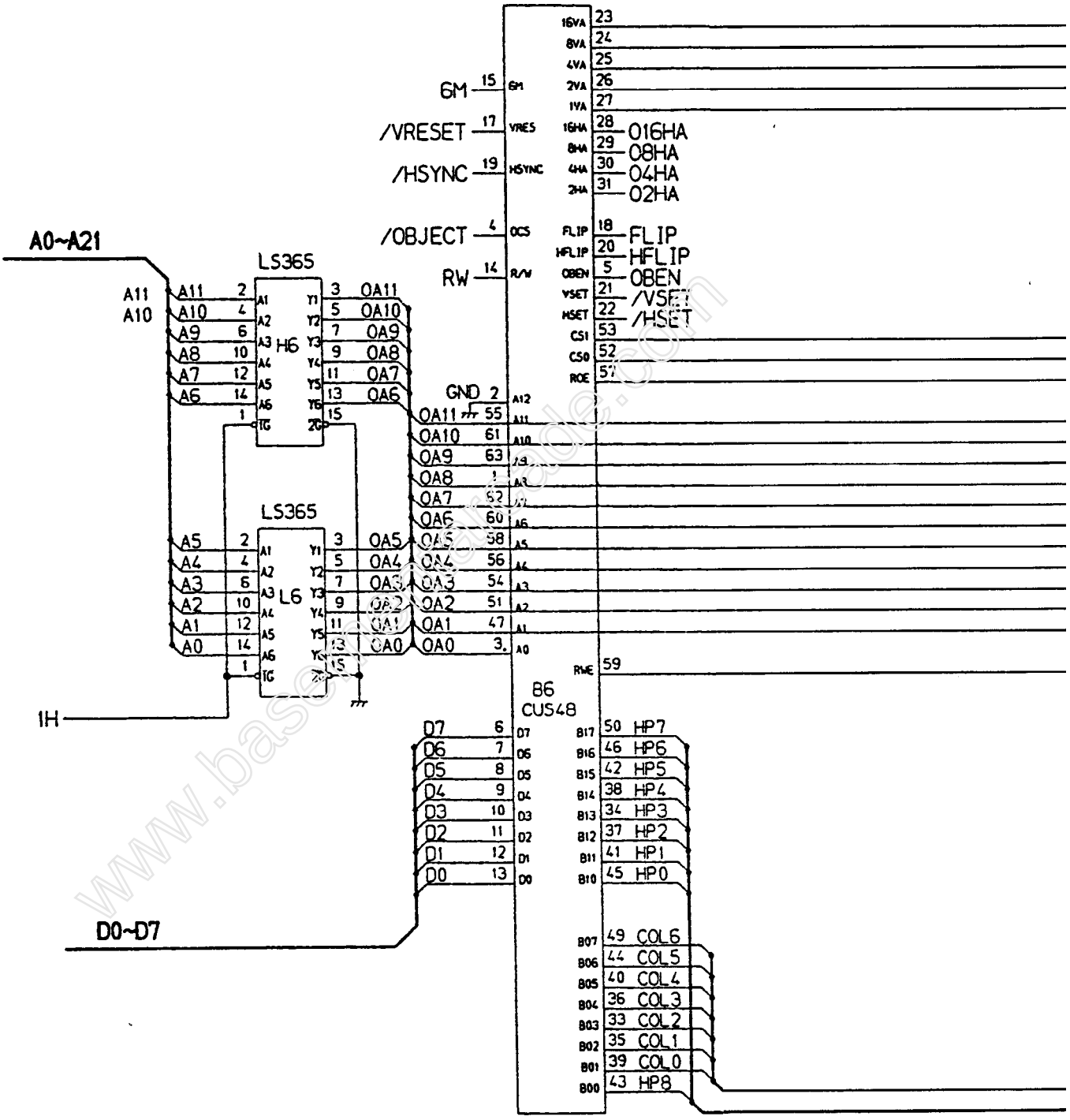
A0~A21
LS365
H6
LS365
L6
1H
D0~D7
B6
CUS48
6M
/VRESET
/HSYNC
/OBJECT
RW
GND
16VA
8VA
4VA
2VA
1VA
16HA
8HA
4HA
2HA
FLIP
HFLIP
OBEN
/VSET
/HSET
CS1
CS0
ROE
RWE
HP7
HP6
HP5
HP4
HP3
HP2
HP1
HP0
HP8
COL6
COL5
COL4
COL3
COL2
COL1
COL0

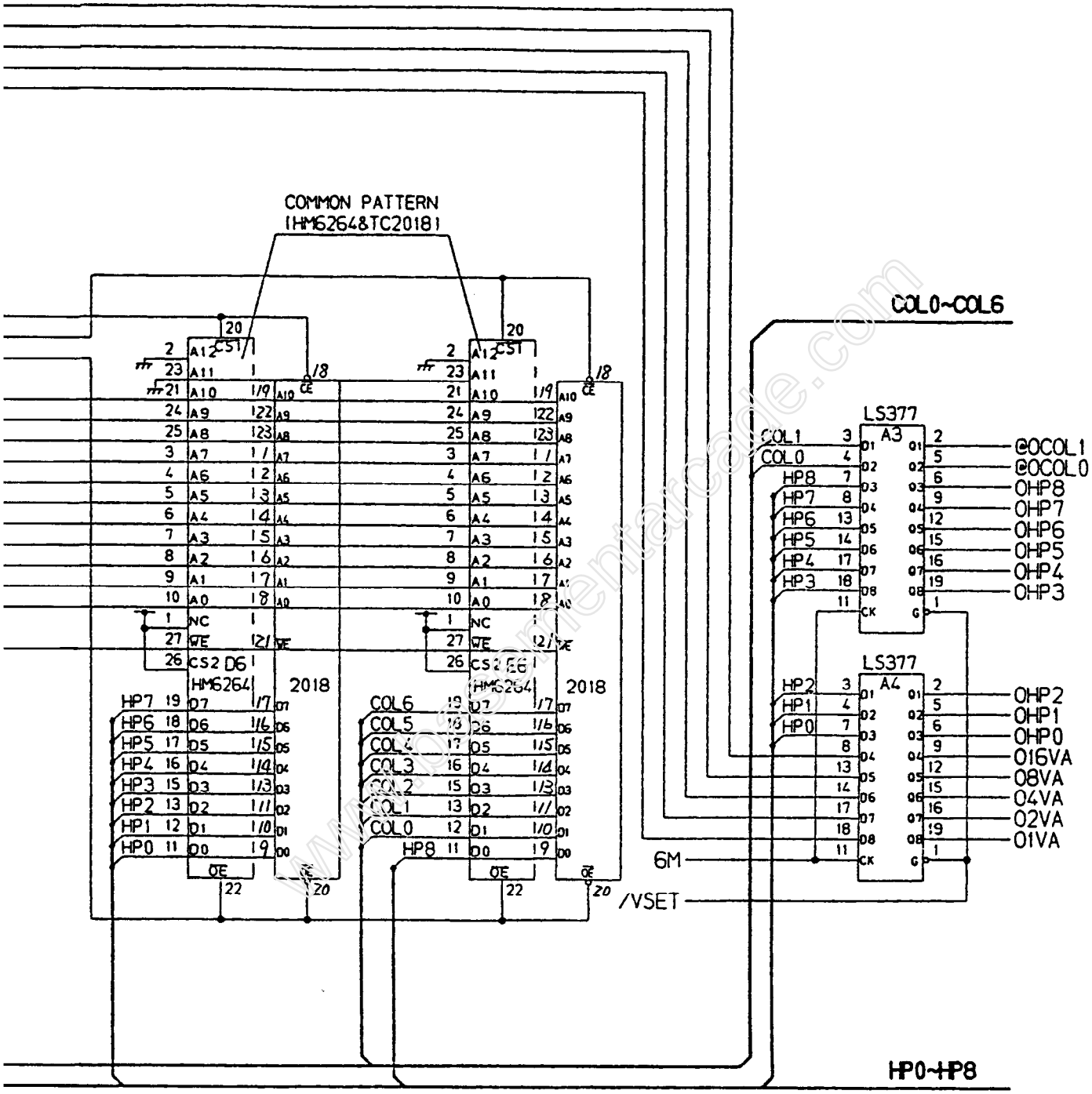

OBJECT CONTROL

NOTICE TO ALL PERSONS RECEIVING THIS DRAWING

CONFIDENTIAL: Reproduction forbidden without the specific written permission of Atari Games Corporation, Milpitas, CA. This drawing is only conditionally issued, and neither receipt nor possession thereof confers or transfers any right in, or license to use, the subject matter of the drawing or any design or technical information shown thereon, nor any right to reproduce this drawing or any part thereof. Except for manufacture by vendors of Atari Games Corporation, and for manufacture under the corporation's written license, no right is granted to reproduce this drawing or the subject matter thereof, unless by written agreement with or written permission from the corporation.

ATARI GAMES

Pac-Mania™ CPU PCB
Schematic Diagram—Page 3

© 1987 Atari Games Corporation

SP-315 Sheet 6B
1st printing

99-090286

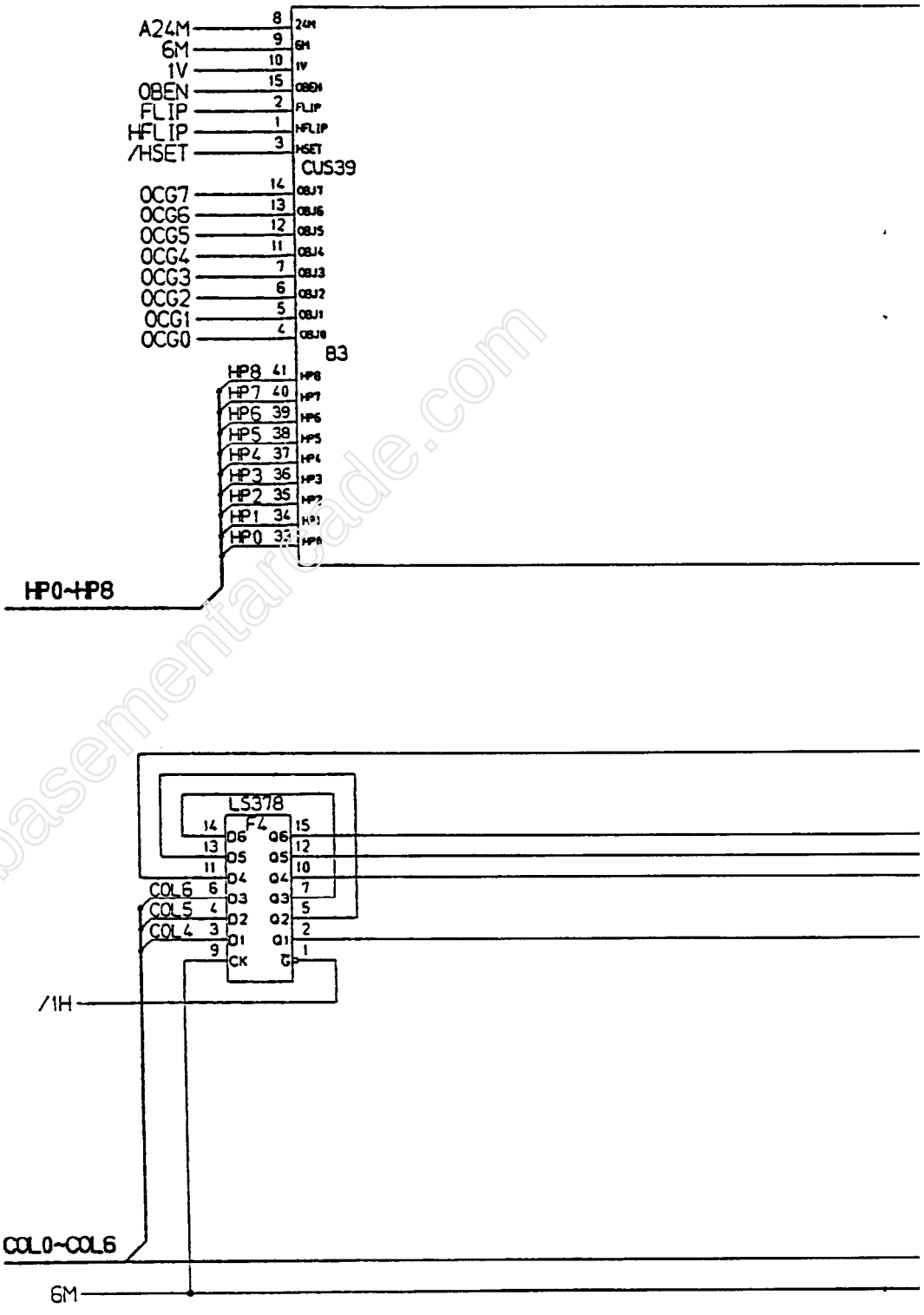

www.basementarcade.com

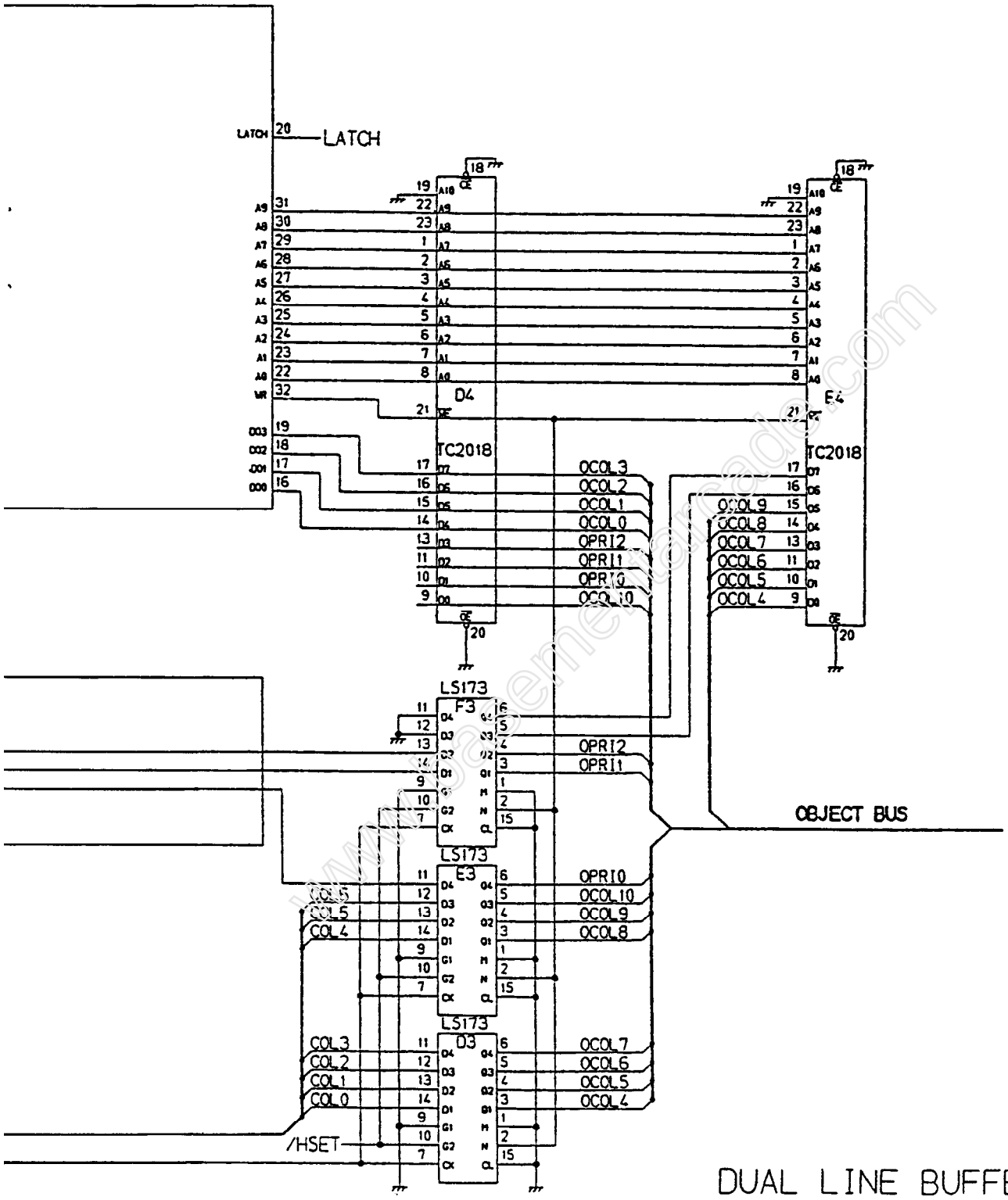

NOTICE TO ALL PERSONS RECEIVING THIS DRAWING

CONFIDENTIAL: Reproduction forbidden without the specific written permission of Atari Games Corporation, Milpitas, CA. This drawing is only conditionally issued, and neither receipt nor possession thereof confers or transfers any right in, or license to use, the subject matter of the drawing or any design or technical information shown thereon, nor any right to reproduce this drawing or any part thereof. Except for manufacture by vendors of Atari Games Corporation, and for manufacture under the corporation's written license, no right is granted to reproduce this drawing or the subject matter thereof, unless by written agreement with or written permission from the corporation.

ATARI GAMES

Pac-Mania™ CPU PCB
Schematic Diagram—Page 4

© 1987 Atari Games Corporation

SP-315 Sheet 7A
1st printing

99-090286

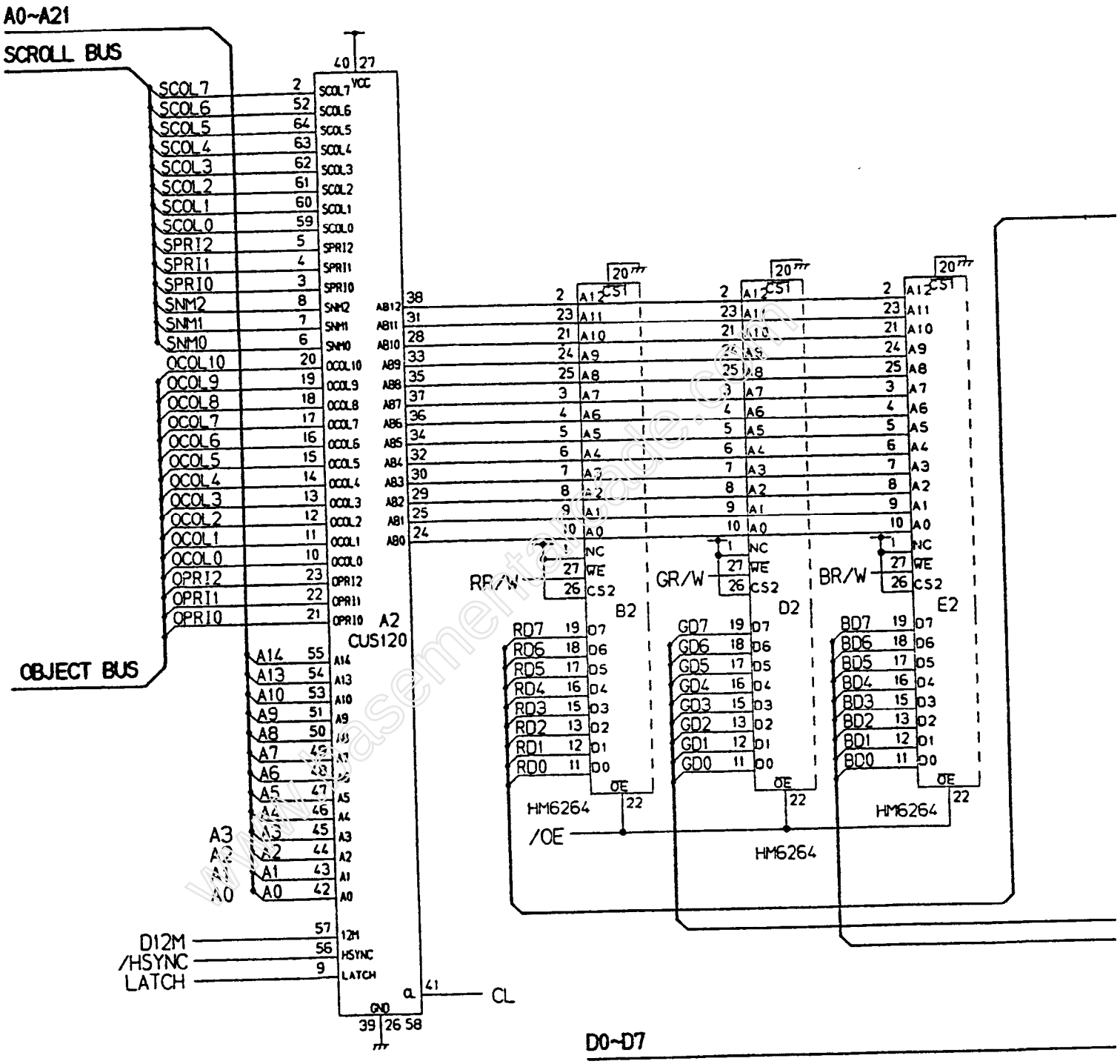
A0~A21
SCROLL BUS
SCOL7
SCOL6
SCOL5
SCOL4
SCOL3
SCOL2
SCOL1
SCOL0
SPRI2
SPRI1
SPRI0
SNM2
SNM1
SNM0
OCOL10
OCOL9
OCOL8
OCOL7
OCOL6
OCOL5
OCOL4
OCOL3
OCOL2
OCOL1
OCOL0
OPRI2
OPRI1
OPRI0
OBJECT BUS
A14
A13
A10
A9
A8
A7
A6
A5
A4
A3
A2
A1
A0
A2
CUS120
D12M
/HSYNC
LATCH
CL
VCC
GND
RR/W
GR/W
BR/W
B2
D2
E2
HM6264
/OE
RD7
RD6
RD5
RD4
RD3
RD2
RD1
RD0
GD7
GD6
GD5
GD4
GD3
GD2
GD1
GD0
BD7
BD6
BD5
BD4
BD3
BD2
BD1
BD0
D0~D7

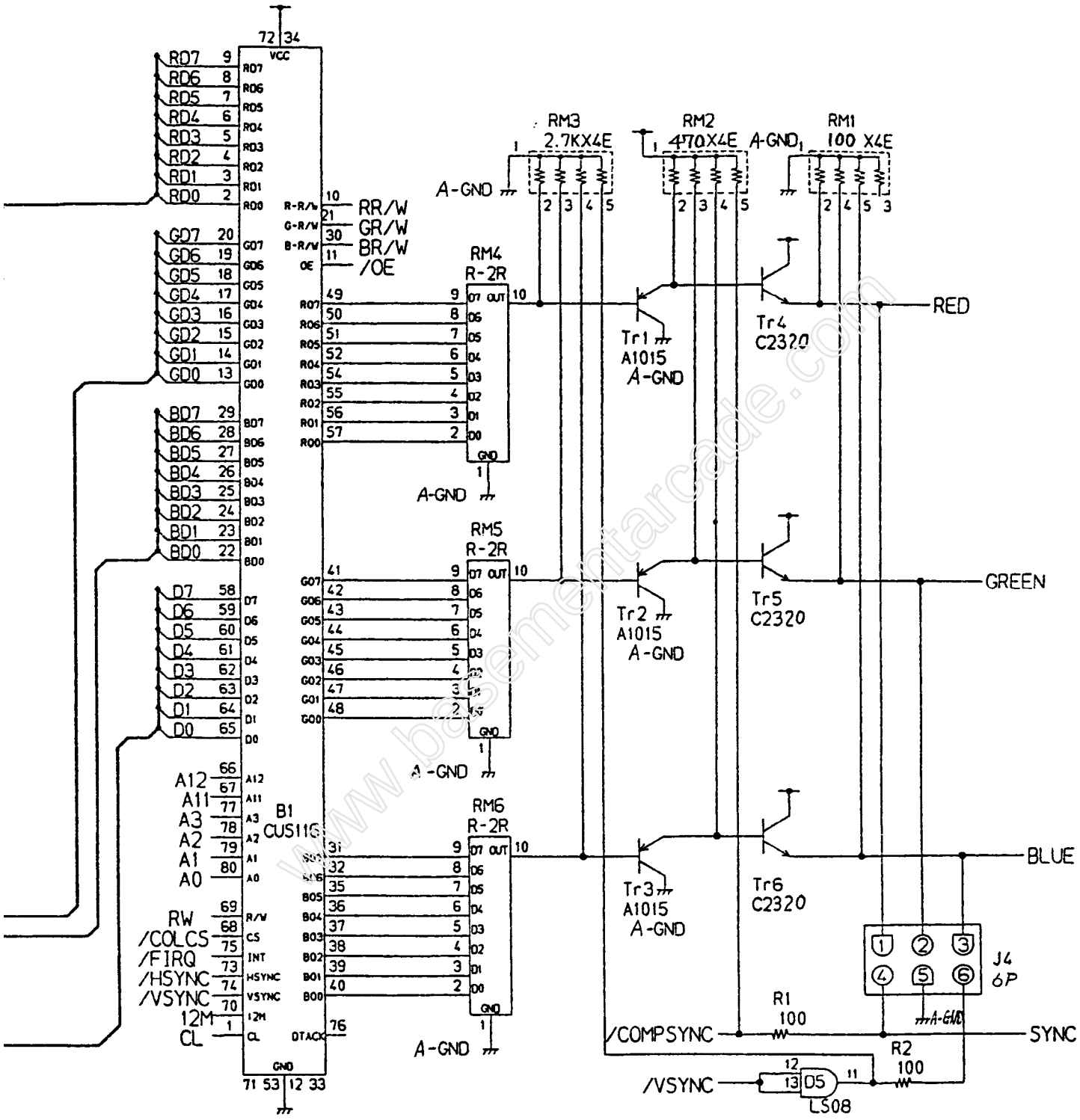

NOTICE TO ALL PERSONS RECEIVING THIS DRAWING

CONFIDENTIAL: Reproduction forbidden without the specific written permission of Atari Games Corporation, Milpitas, CA. This drawing is only conditionally issued, and neither receipt nor possession thereof confers or transfers any right in, or license to use, the subject matter of the drawing or any design or technical information shown thereon, nor any right to reproduce this drawing or any part thereof. Except for manufacture by vendors of Atari Games Corporation, and for manufacture under the corporation's written license, no right is granted to reproduce this drawing or the subject matter thereof, unless by written agreement with or written permission from the corporation.

ATARI GAMES

Pac-Mania™ CPU PCB Schematic Diagram—Page 5

© 1987 Atari Games Corporation

SP-315 Sheet 7B
1st printing

99-090286

A0~A21

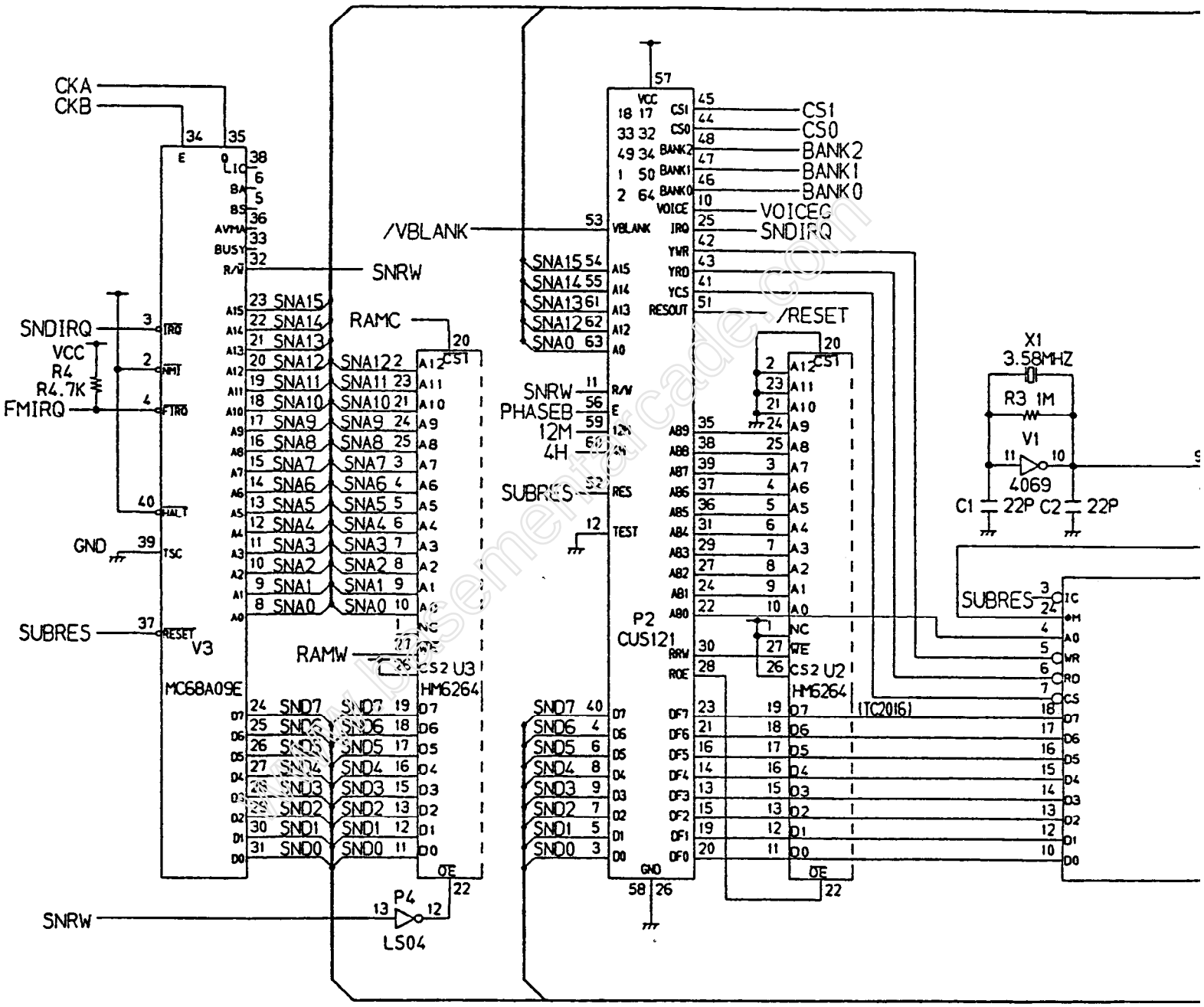
CKA
CKB
SNDIRQ
VCC
R4
R4.7K
FMIRQ
GND
SUBRES
SNRW
RAMC
RAMW
V3
MC68A09E
U3
HM6264
P4
LS04
/VBLANK
PHASEB
12M
4H
SUBRES
/RESET
P2
CUS121
CS1
CS0
BANK2
BANK1
BANK0
VOICEC
SNDIRQ
X1
3.58MHZ
R3 1M
V1
4069
C1 22P C2 22P
U2
HM6264
IC2016

D0~D7

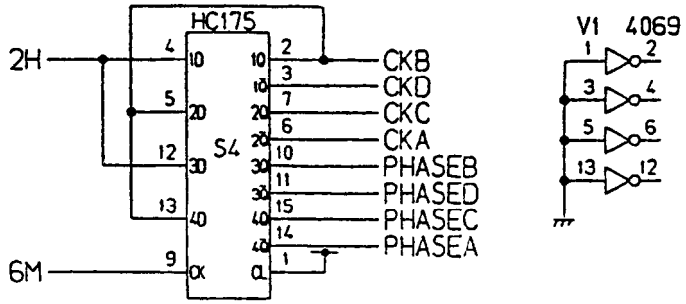
HC175
S4
2H
6M
CKB
CKD
CKC
CKA
PHASEB
PHASED
PHASEC
PHASEA
V1 4069

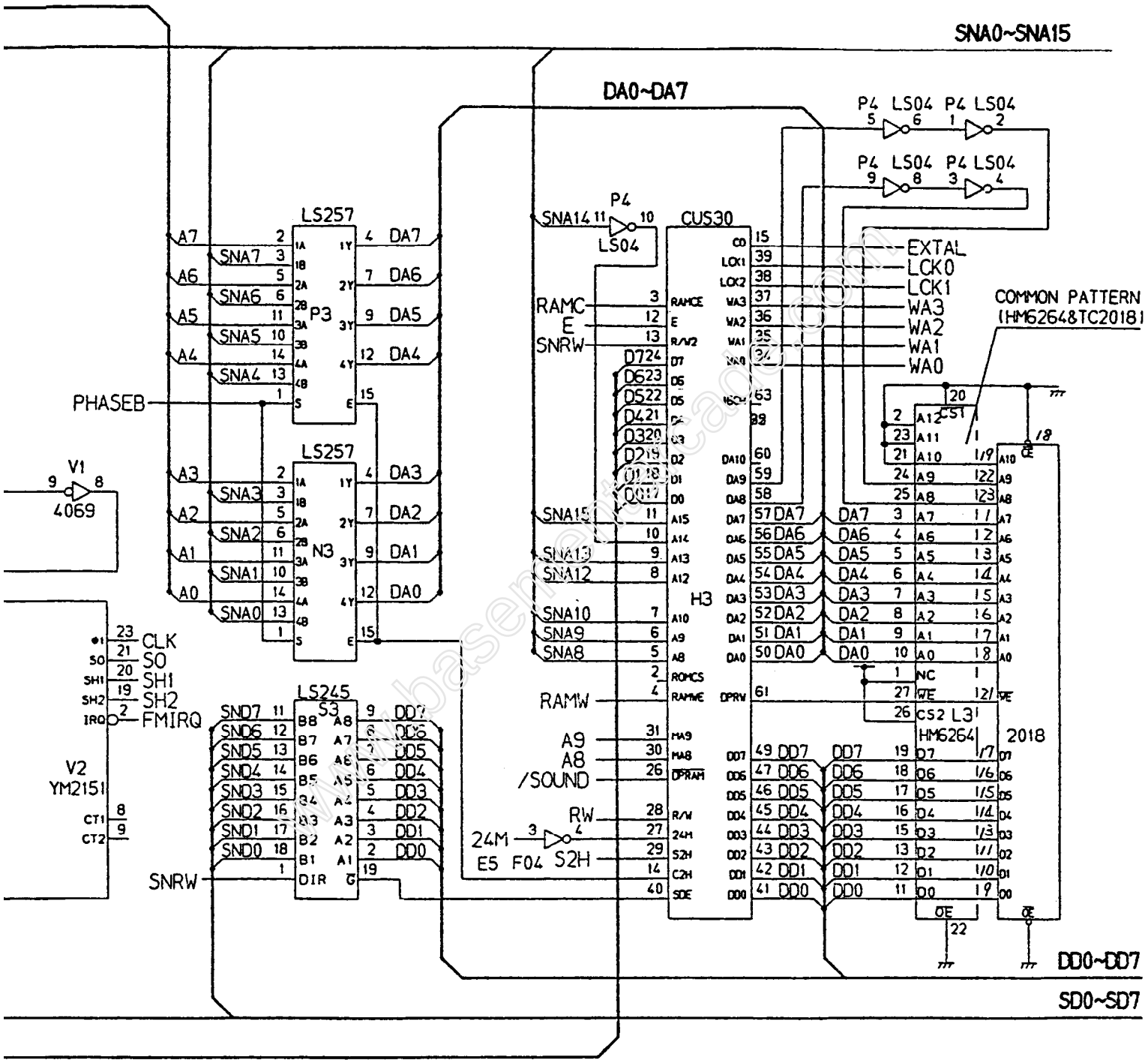

SOUND GENERATOR

NOTICE TO ALL PERSONS RECEIVING THIS DRAWING

CONFIDENTIAL: Reproduction forbidden without the specific written permission of Atari Games Corporation, Milpitas, CA. This drawing is only conditionally issued, and neither receipt nor possession thereof confers or transfers any right in, or license to use, the subject matter of the drawing or any design or technical information shown thereon, nor any right to reproduce this drawing or any part thereof. Except for manufacture by vendors of Atari Games Corporation, and for manufacture under the corporation's written license, no right is granted to reproduce this drawing or the subject matter thereof, unless by written agreement with or written permission from the corporation.

ATARI® GAMES

Pac-Mania™ CPU PCB
Schematic Diagram—Page 6

© 1987 Atari Games Corporation

SP-315 Sheet 8A
1st printing

99-090286

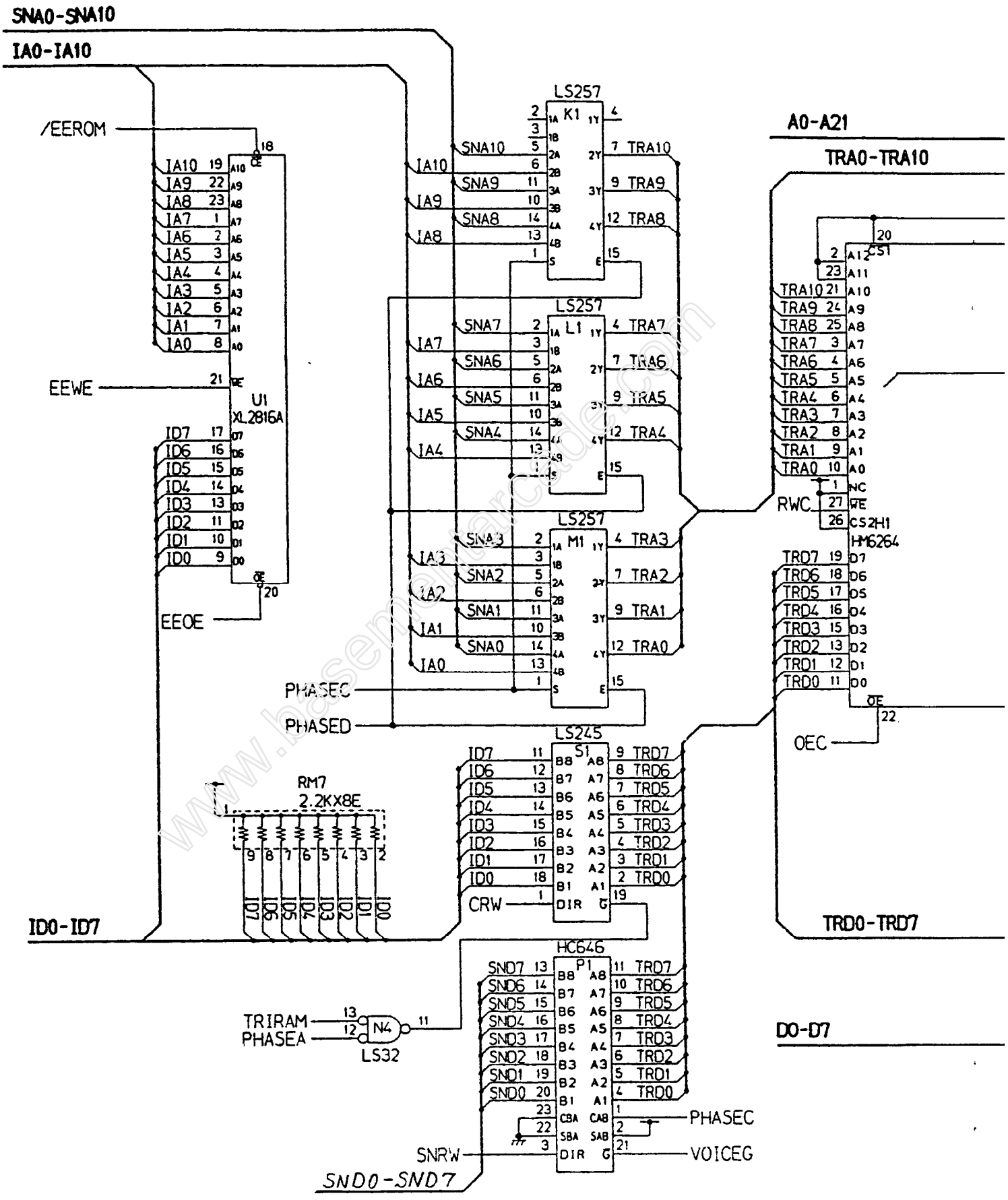
SNA0-SNA10
IA0-IA10
/EEROM
EEWE
EEOE
U1
XL2816A
IA10
IA9
IA8
IA7
IA6
IA5
IA4
IA3
IA2
IA1
IA0
ID7
ID6
ID5
ID4
ID3
ID2
ID1
ID0
LS257
K1
L1
M1
SNA10
SNA9
SNA8
SNA7
SNA6
SNA5
SNA4
SNA3
SNA2
SNA1
SNA0
TRA10
TRA9
TRA8
TRA7
TRA6
TRA5
TRA4
TRA3
TRA2
TRA1
TRA0
PHASEC
PHASED
RM7
2.2KX8E
LS245
S1
CRW
ID0-ID7
TRIRAM
PHASEA
N4
LS32
HC646
P1
SND7
SND6
SND5
SND4
SND3
SND2
SND1
SND0
SNRW
SND0-SND7
PHASEC
VOICEG
A0-A21
TRA0-TRA10
CS1
RWC
CS2H1
HM6264
TRD7
TRD6
TRD5
TRD4
TRD3
TRD2
TRD1
TRD0
OEC
TRD0-TRD7
D0-D7

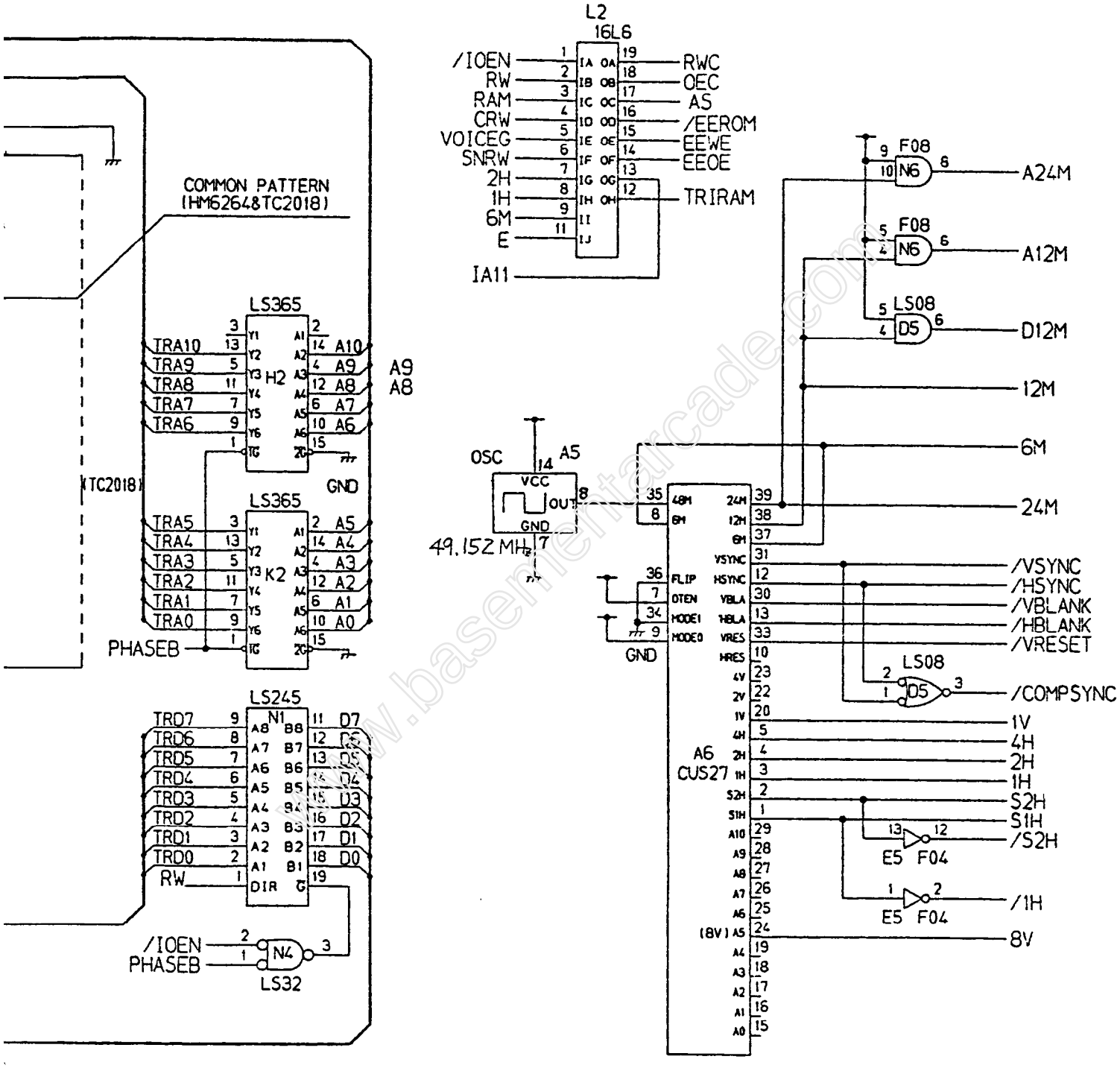

TRI PORT RAM, EEPROM, SYNC GENERATOR

NOTICE TO ALL PERSONS RECEIVING THIS DRAWING

CONFIDENTIAL: Reproduction forbidden without the specific written permission of Atari Games Corporation, Milpitas, CA. This drawing is only conditionally issued, and neither receipt nor possession thereof confers or transfers any right in, or license to use, the subject matter of the drawing or any design or technical information shown thereon, nor any right to reproduce this drawing or any part thereof. Except for manufacture by vendors of Atari Games Corporation, and for manufacture under the corporation's written license, no right is granted to reproduce this drawing or the subject matter thereof, unless by written agreement with or written permission from the corporation.

ATARI GAMES

Pac-Mania™ CPU PCB
Schematic Diagram—Page 7

© 1987 Atari Games Corporation

SP-315 Sheet 8B
1st printing

99-090286

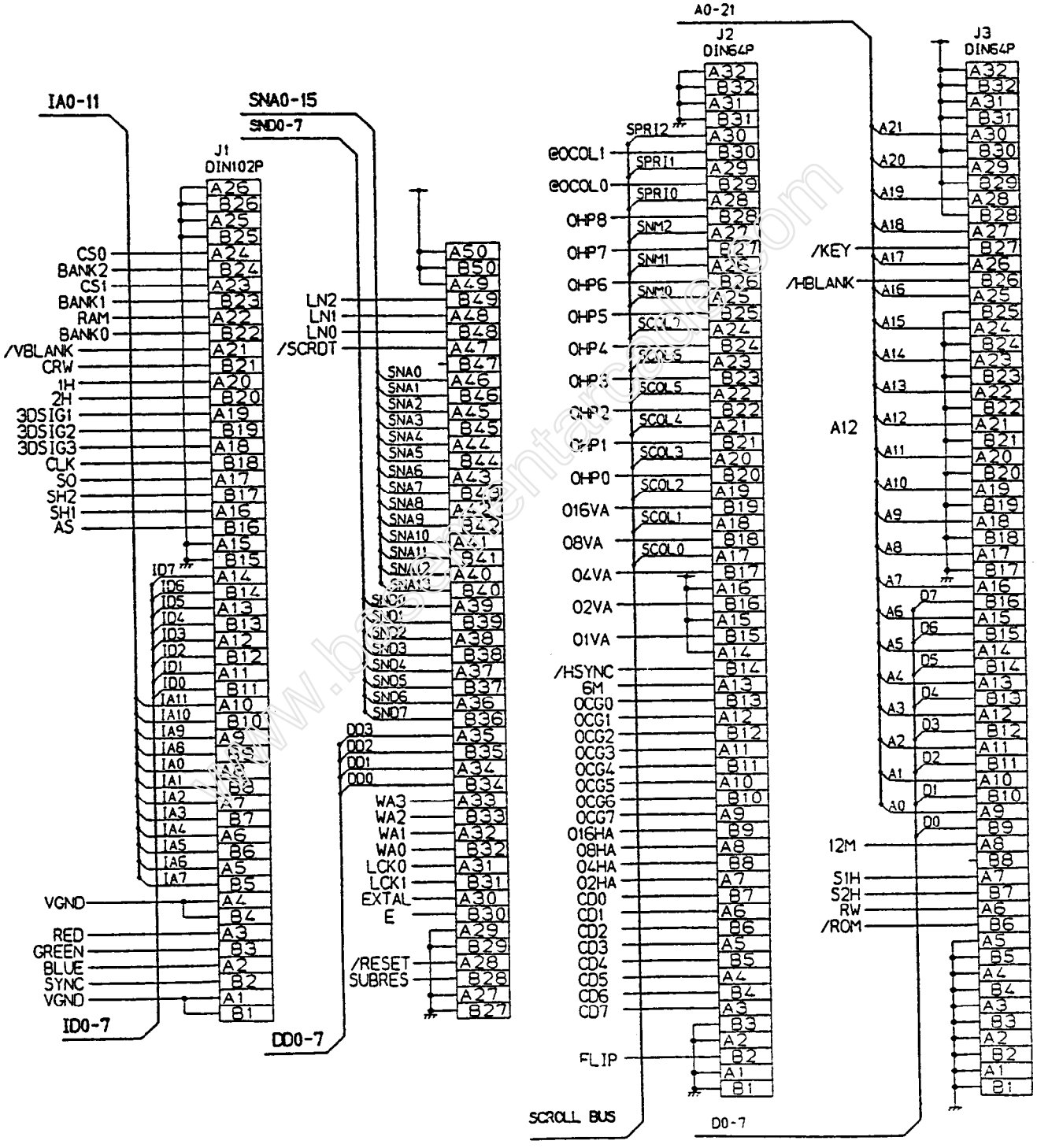
IA0-11
SNA0-15
SND0-7
J1
DIN102P
CS0
BANK2
CS1
BANK1
RAM
BANK0
/VBLANK
CRW
1H
2H
3DSIG1
3DSIG2
3DSIG3
CLK
SO
SH2
SH1
AS
ID7
ID6
ID5
ID4
ID3
ID2
ID1
ID0
IA11
IA10
IA9
IA8
IA0
IA1
IA2
IA3
IA4
IA5
IA6
IA7
VGND
RED
GREEN
BLUE
SYNC
VGND
ID0-7
LN2
LN1
LN0
/SCRDT
SNA0
SNA1
SNA2
SNA3
SNA4
SNA5
SNA6
SNA7
SNA8
SNA9
SNA10
SNA11
SNA12
SNA13
SND0
SND1
SND2
SND3
SND4
SND5
SND6
SND7
DD3
DD2
DD1
DD0
WA3
WA2
WA1
WA0
LCK0
LCK1
EXTAL
E
/RESET
SUBRES
DD0-7
A0-21
J2
DIN64P
SPRI2
@OCOL1
SPRI1
@OCOL0
SPRI0
OHP8
SNM2
OHP7
SNM1
OHP6
SNM0
OHP5
SCOL7
OHP4
SCOL6
OHP3
SCOL5
OHP2
SCOL4
OHP1
SCOL3
OHP0
SCOL2
016VA
SCOL1
08VA
SCOL0
04VA
02VA
01VA
/HSYNC
6M
OCG0
OCG1
OCG2
OCG3
OCG4
OCG5
OCG6
OCG7
016HA
08HA
04HA
02HA
CD0
CD1
CD2
CD3
CD4
CD5
CD6
CD7
FLIP
SCROLL BUS
J3
DIN64P
A21
A20
A19
A18
/KEY
A17
/HBLANK
A16
A15
A14
A13
A12
A12
A11
A10
A9
A8
A7
A6
A5
A4
A3
A2
A1
A0
D7
D6
D5
D4
D3
D2
D1
D0
12M
S1H
S2H
RW
/ROM
D0-7

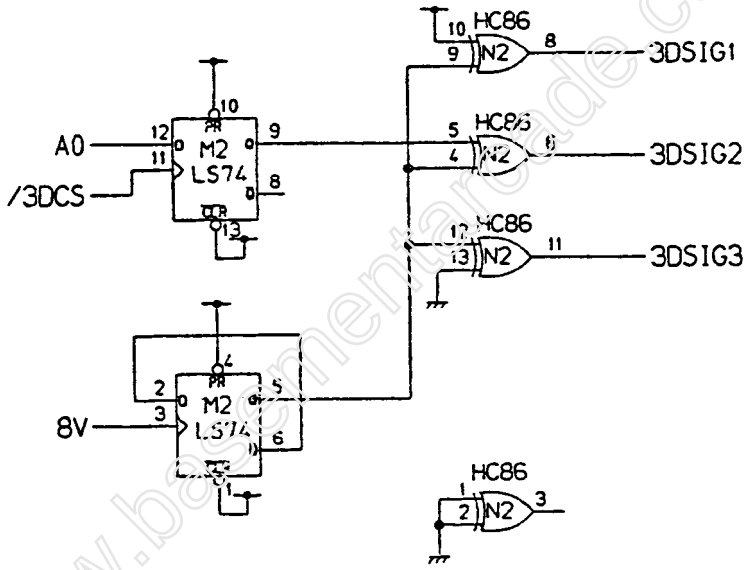

DIN CONNECTOR,3D

NOTICE TO ALL PERSONS RECEIVING THIS DRAWING

CONFIDENTIAL: Reproduction forbidden without the specific written permission of Atari Games Corporation, Milpitas, CA. This drawing is only conditionally issued, and neither receipt nor possession thereof confers or transfers any right in, or license to use, the subject matter of the drawing or any design or technical information shown thereon, nor any right to reproduce this drawing or any part thereof. Except for manufacture by vendors of Atari Games Corporation, and for manufacture under the corporation's written license, no right is granted to reproduce this drawing or the subject matter thereof, unless by written agreement with or written permission from the corporation.

ATARI® GAMES

Pac-Mania™ CPU PCB
Schematic Diagram—Page 8

© 1987 Atari Games Corporation

SP-315 Sheet 9A
1st printing

99-090286

www.basementarcade.com

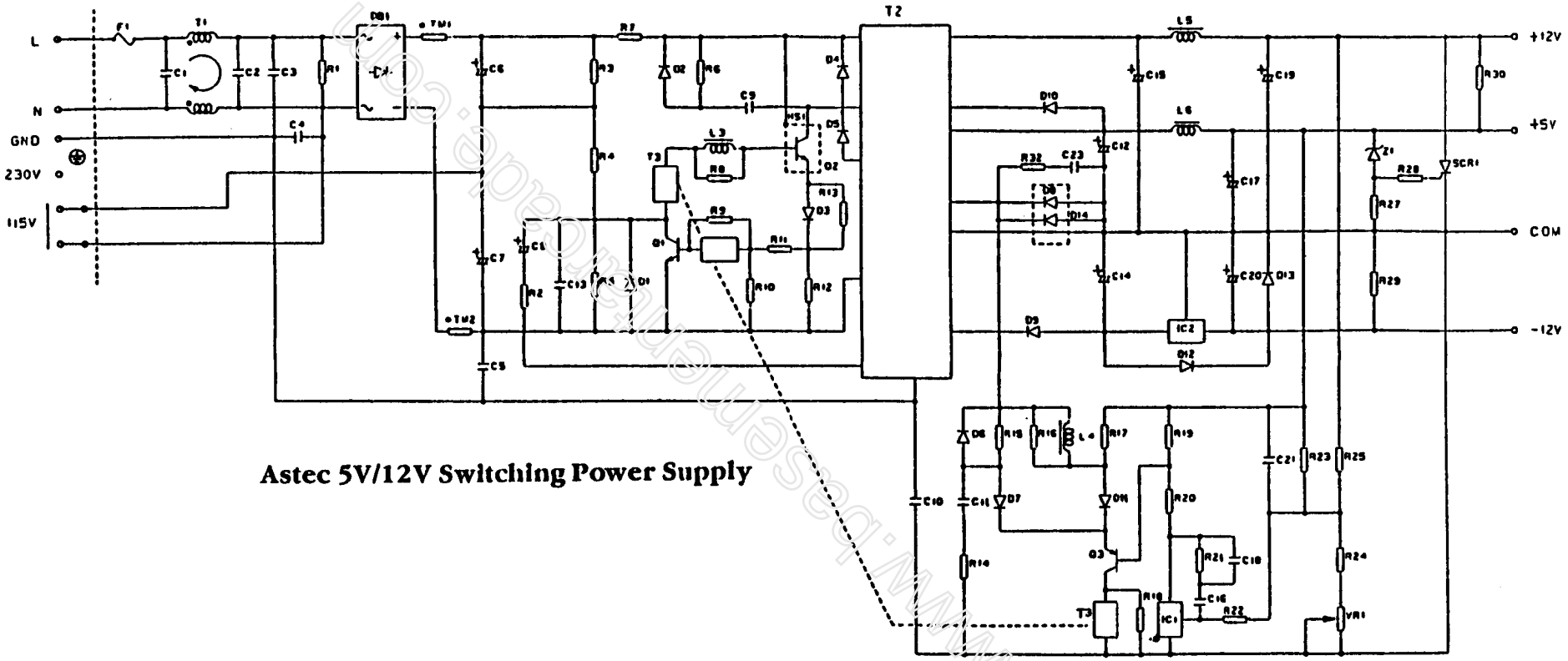

Astec 5V/12V Switching Power Supply

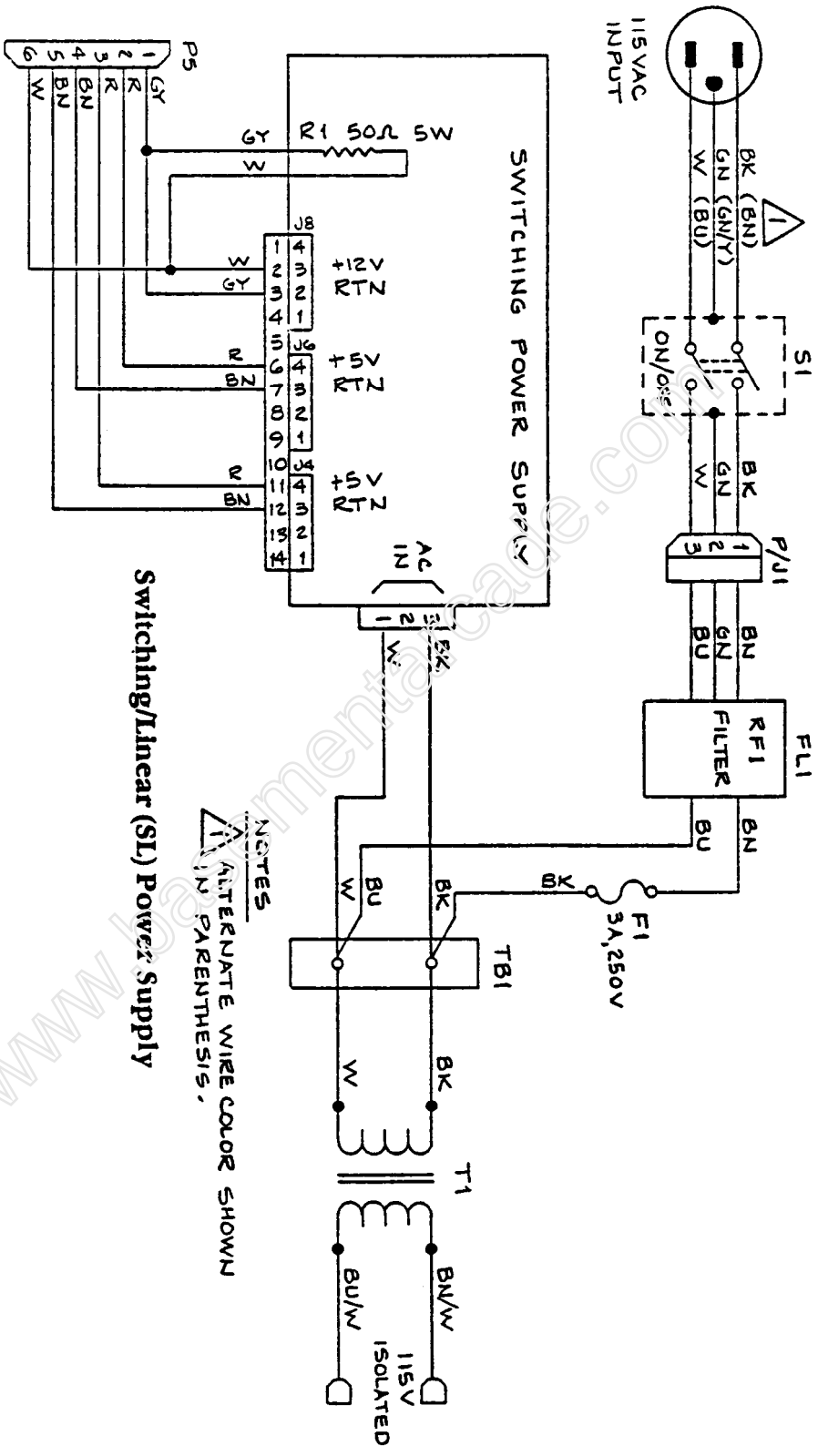

Switching/Linear (SL) Power Supply

www.basementarcade.com

NOTICE TO ALL PERSONS RECEIVING THIS DRAWING

CONFIDENTIAL: Reproduction forbidden without the specific written permission of Atari Games Corporation, Milpitas, CA. This drawing is only conditionally issued, and neither receipt nor possession thereof confers or transfers any right in, or license to use, the subject matter of the drawing or any design or technical information shown thereon, nor any right to reproduce this drawing or any part thereof. Except for manufacture by vendors of Atari Games Corporation, and for manufacture under the corporation's written license, no right is granted to reproduce this drawing or the subject matter thereof, unless by written agreement with or written permission from the corporation.

ATARI GAMES

Switching/Linear & Astec 5V/12V Switching Power Supply Wiring Diagrams

© 1987 Atari Games Corporation

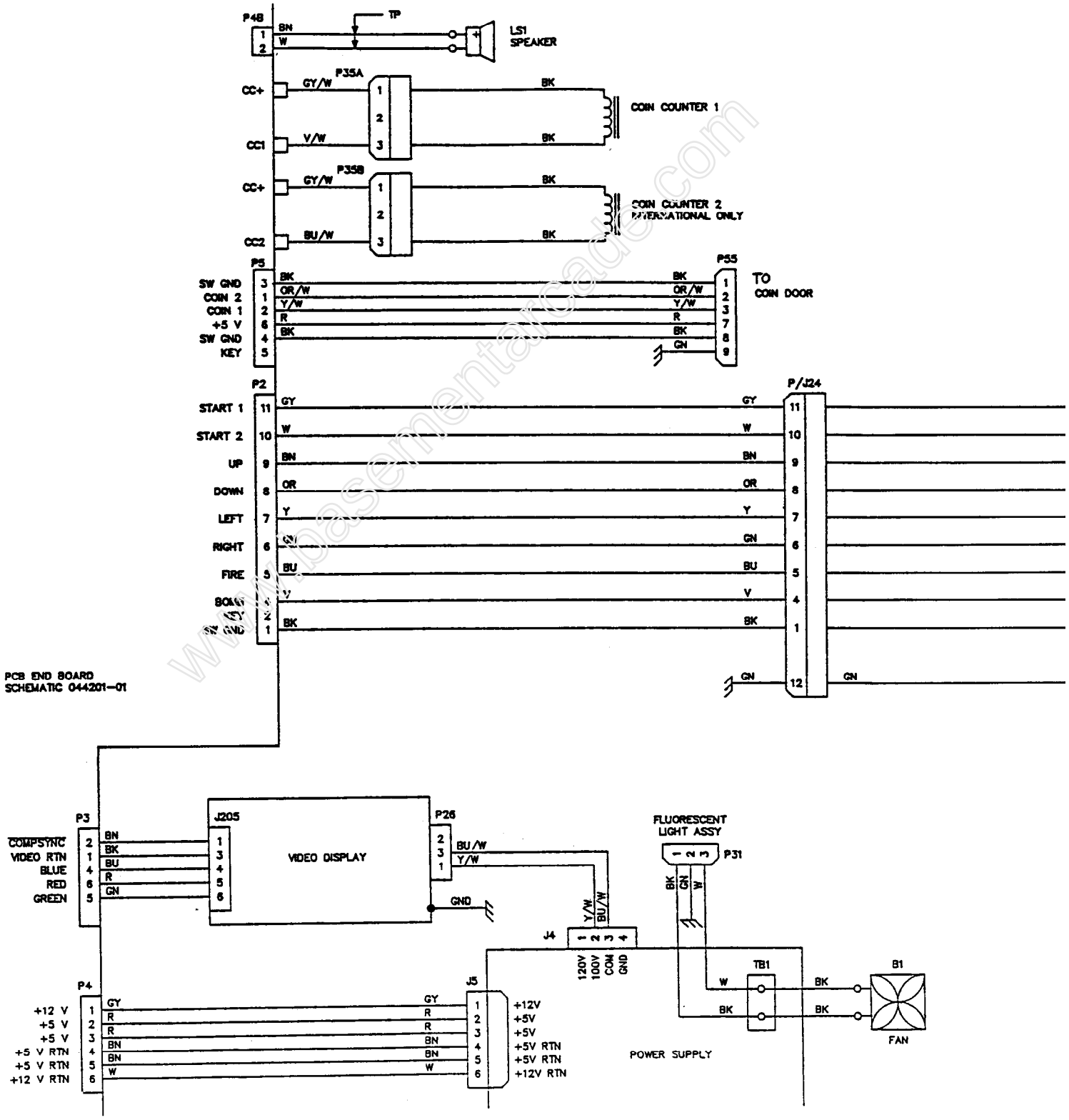
P48
TP
BN
W
LS1
SPEAKER
P35A
CC+
GY/W
BK
COIN COUNTER 1
CC1
V/W
BK
P35B
CC+
GY/W
BK
COIN COUNTER 2
INTERNATIONAL ONLY
CC2
BU/W
BK
P5
SW GND
COIN 2
COIN 1
+5 V
SW GND
KEY
P55
TO
COIN DOOR
P2
START 1
START 2
UP
DOWN
LEFT
RIGHT
FIRE
P/J24
GN
PCB END BOARD
SCHEMATIC 044201-01
P3
COMPSYNC
VIDEO RTN
BLUE
RED
GREEN
J205
VIDEO DISPLAY
P26
BU/W
Y/W
GND
FLUORESCENT
LIGHT ASSY
P31
J4
120V
100V
COM
GND
P4
+12 V
+5 V
+5 V
+5 V RTN
+5 V RTN
+12 V RTN
J5
+12V
+5V
+5V
+5V RTN
+5V RTN
+12V RTN
TB1
B1
FAN
POWER SUPPLY

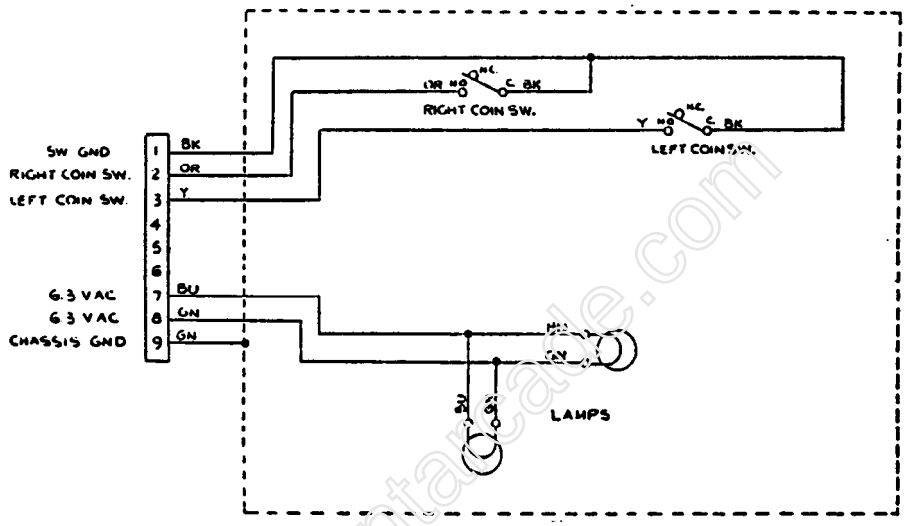

Coin Door Wiring Diagram

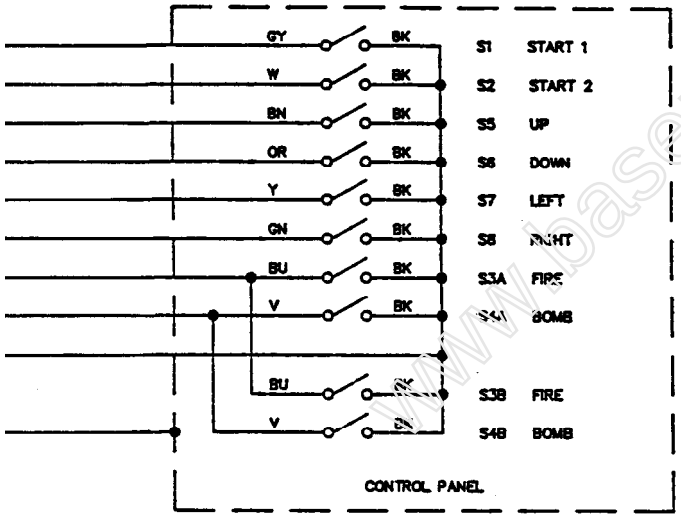

NOTICE TO ALL PERSONS RECEIVING THIS DRAWING

CONFIDENTIAL: Reproduction forbidden without the specific written permission of Atari Games Corporation, Milpitas, CA. This drawing is only conditionally issued, and neither receipt nor possession thereof confers or transfers any right in, or license to use, the subject matter of the drawing or any design or technical information shown thereon, nor any right to reproduce this drawing or any part thereof. Except for manufacture by vendors of Atari Games Corporation, and for manufacture under the corporation's written license, no right is granted to reproduce this drawing or the subject matter thereof, unless by written agreement with or written permission from the corporation.

ATARI® GAMES

Pac-Mania™ Main Wiring Diagram and Coin Door Wiring Diagram

© 1987 Atari Games Corporation

SP-315 Sheet 10B
1st printing