Thank You for downloading this manual. I hope it helps you resolve any issues you have had with your game.

This manual was purchased, and scanned by Basement Arcade Associates, www.basementarcade.com and is offered for free download at our site.

This PDF is not to be distributed on any collection CD / DVD, nor is to be linked to via any other internet site without permission from us. Likewise it is not to be distributed from any other site without our permission.

Abiding by these requests, will insure the continuing support of new manuals added to our site.

All original copyrights held by their original owners, This PDF copyrighted Basement Arcade Associates.

-=Mark=-

www.basementarcade.com

RAMPAGE U.R.

3 PLAYER

www.basementarcade.com

Bally

MIDWAY MFG CO

10601 W Belmont Avenue
Franklin Park, Illinois 60131
U S A

Phone (312) 451-9200 Cable Address MIDCO Telex No. 72-1596

0E36-00300-0000

WARNING

THIS GAME MUST BE GROUNDED. FAILURE TO DO SO MAY RESULT IN DESTRUCTION TO ELECTRONIC COMPONENTS.

WARNING: This equipment generates, uses and can radiate radio frequency energy and if not installed and used in accordance with the instruction manual, may cause interference to radio communications. It has been tested and found to comply with the limits for a CLASS A computing device pursuant to SUBPART J of PART 15 of FCC RULES, which are designed to provide reasonable protection against such interference when operated in a commercial environment. Operation of this equipment in a residential area is likely to cause interference in which case the user at his own expense will be required to take whatever measures may be required to correct the interference.

ELECTRICAL BULLETIN: FOR ALL APPARATUS COVERED BY THE CANADIAN STANDARDS ASSOCIATION (CSA) STANDARD C22.2 NO. 1, WHICH EMPLOYS A SUPPLY CORD TERMINATED WITH A POLARIZED 2-PRONG ATTACHMENT PLUG.

CAUTION: TO PREVENT ELECTRIC SHOCK DO NOT USE THIS (POLARIZED) PLUG WITH AN EXTENSION CORD, RECEPTACLE OR OTHER OUTLET UNLESS THE BLADES CAN BE FULLY INSERTED TO PREVENT BLADE EXPOSURE.

ATTENTION: POUR PREVENIR CHOCS ELECTRIQUES NE PAS UTILISER CETTE FICHE POLARISEE AVEC UN PROLONGATEUR. UNE PRISE DE COURANT OU UNE AUTRE SORTIE DE COURANT, SAUF SI LES LAMES PEUVENT ETRE INSEREES A FOND SANS EN LAISSER AUCUNE PARTIE A DECOUVERT.

Bally/MIDWAY T.M.

Invites You To Use

OUR TOLL FREE NUMBER FOR SERVICE INFORMATION CONCERNING THIS GAME, OR ANY OTHER BALLY/MIDWAY™ GAME YOU NOW HAVE ON LOCATION.

CALL US FOR PROMPT, COURTEOUS ANSWERS TO YOUR PROBLEMS.

Video or Pinball - Continental U.S. 800-323-7182

Bally/MIDWAY T.M. 10601 West Belmont Avenue Franklin Park, Illinois, 60131 phone (312) 451-9200

©COPYRIGHT MCMLXXXVI BY BALLY MIDWAY MFG. CO. ALL RIGHTS RESERVED.

NO PART OF THIS PUBLICATION MAY BE REPRODUCED BY ANY MECHANICAL, PHOTOGRAPHIC, OR ELECTRONIC PROCESS, OR IN THE FORM OF A PHONOGRAPHIC RECORDING, NOR MAY IT BE TRANSMITTED, OR OTHERWISE COPIED FOR PUBLIC OR PRIVATE USE, WITHOUT PERMISSION FROM THE PUBLISHER. THIS MANUAL IS FOR SERVICE USE ONLY, AND NOT FOR GENERAL DISTRIBUTION. FOR PERMISSION REQUESTS, WRITE: BALLY MIDWAY MFG. CO., 10601 W. BELMONT AVE., FRANKLIN PARK, IL 60131.

Printed in U.S.A.

SECTION 1

GAME DESCRIPTION, INSTALLATION AND GENERAL GAME OPERATION INSTRUCTIONS

RAMPAGE GAME DESCRIPTION

This game displays giant all-powerful creatures fighting for survival in various city environments, against a continuous onslaught of National Guard and police forces! Each player becomes one of these mighty warriors capable of collapsing skyscrapers into dust and rubble. All three of the creatures are human mutations: an ape (George), a lizard (Lizzie), and a wolf-like creature (Ralph).

The game can be played by one, two or three people. In a one player game, one creature character is controlled by the person playing the game while the National Guard and police forces are controlled by the game itself. In turn, each additional player controls an additional creature character.

Each player controls his character with a joystick, a Jump button (which is also a Game Start button), and a Punch/grab button. Using the joystick, the player character can move left, right, up, or down (4 directions only). Hitting the Jump button while using the joystick enables the character to jump in any of four directions. Hitting the Punch/grab button enables the character to punch and/or grab in any of four directions. On the control panel are three sets of these controls: left side (George), center (Lizzie), and right side (Ralph).

Game play begins for any one player when, after inserting proper coinage, he presses the Jump button of the character of his choice (only one character for each player per game). Three separate newspaper "datelines" appear on the screen, one for each creature. These "datelines" reappear after every rack. Only "datelines" for **ACTIVE** player characters will display information: 1) the day - number (may or may not appear) which indicates the rack number, 2) the name of the city environment, and 3) a message about the creature or a game play hint. Next, the city environment appears on the screen, mainly consisting of high-rise buildings, and now the battle begins. The player character appears in the city where it is attacked by the National Guard and police forces with massive firepower. It must run, jump, climb buildings, and punch its' enemies to stay alive until the end of the rack.

In this initial rack, hazards to the player character are mainly: 1) National Guard helicopters with machine guns and 2) police swat team members moving from window to window of the buildings using rifles and throwing sticks of dynamite. Everytime it is damaged, by getting punched, shot, shocked, or by falling or by being on a collapsed building, it loses "power". This is measured by a "damage" gauge for each creature at the top of the screen. When the gauge reads empty, the mutant creature shrinks back to its' human form which then creeps off of the screen. At this point, the game allows the player a time limit to "buy back in" to preserve his rack position. Provided as a game option, the game operator may also allow the player a short time limit to "buy back in" to protect his point total. If the player "buys in" in time, before the human form leaves the screen, then it will grow into being the creature again. If not, then the same creature will drop back in from a dirigible. Beyond the time limit the game is over for the player.

However, the rack itself ends ONLY when all of the buildings have been destroyed (either by the creature or by swat team members placing charges of dynamite at the base of each building). If the creature has survived to this point, then the game advances to the next rack. If the player character survives to the end of the rack, the power loss is carried over to the next rack. The player scores points by punching or eating the creature's enemies and also by destroying buildings. But due to the continuous power drain caused by damage, the player character MUST find and eat food to restore its' power level. By punching holes in the buildings, the player MAY find Food (increased power), Bonuses (points) or Hazards (decreased power).

EXAMPLE:	Food	Bonus	Hazard
	Milk	Flower Pot	Cactus
	Turkey	TV Set Off	Poison
	Hot Toast	Money Bag	Toaster

The types of Hazards and Bonuses found OUTSIDE of buildings vary and may increase in difficulty in succeeding "city environment" racks.

EXAMPLE:	Bonus	Hazard
	Auto (or Truck)	National Guard Tank
	Commuter Train	Police Car
	Person in Manhole	Storm Cloud

Another source of game points comes from the player character grabbing a fleeing "townie" from a building window. Two benefits: 1) While holding the "townie", all swat team members disappear from the building windows and 2) accumulating points are scored during the time the townie is held.

For the continuous buy-in feature, hundreds of racks "city environments" have been created.

This game incorporates Bally Midway's JOIN THE ACTION feature.

JOIN THE ACTION - Each set of game controls includes a corresponding start ("Jump") button, which is activated independently. This allows a person, after inserting the proper coinage, to begin play at any time including while the other sets of game controls are in use.

www.basementarcade.com

GENERAL INSTRUCTIONS

FOR

RAMPAGE-3 PLAYER-U.R.

INSTALLATION

1. Remove keys from the taped coin return slot and unlock to open the coin box door.
2. Remove four (4) "CABINET LEVELING LEGS" from inside the coin box.
3. Tip the cabinet to the side and remove the shipping cleats from its bottom.
   - Locate the threaded holes - one in each corner - and install the "CABINET LEVELING LEGS" in them.
   - Level the cabinet.
   - When finished, the cabinet should be stable in the upright position.
4. - Unlock and remove the rear access door to gain access to the 3-pronged line cord. Reinstall the rear access door.
5. Connect the 3-pronged line cord to a 3-slot A.C. wall outlet **to insure proper grounding.**
6. The power ON/OFF switch is located:
   UPRIGHT MODEL: On top to the right rear of the cabinet as you face the cabinet.

TO SERVICE THE CONTROL PANEL

1. UPRIGHT MODEL:

   - **Turn power to the game off.**
   - The control panel is held in place by two (2) latch clamps which provide constant pressure on the strikes.
   - They can be reached through the coin door.
   - To release the clamps, lift up and toward the center of the control panel.
   - Once they are released, unhook them from their strikes.
   - Swing out the control panel on it's hinge against the cabinet front for servicing.
   - To resecure the control panel, reverse this procedure.

   NOTE: To remove the control panel for **bench-servicing only:**

   - With the control panel in it's open position, disconnect it from it's cabling.
   - Remove the screws which secure the continuous hinge to the cabinet.
   - The control panel is now loose and may be bench serviced.
   - To reinstall the control panel, reverse this procedure.

REMOVAL OF THE VIEWING GLASS

1. UPRIGHT MODEL:

   NOTE: To accomplish this, the hinged control panel MUST swing open to rest against the cabinet front. See the "TO SERVICE THE CONTROL PANEL-UPRIGHT MODEL" procedure.

   - **Turn power to the game off** and swing open the hinged control panel. This frees the viewing glass so it can be removed.

www.basementarcade.com

- By putting your fingers in the slot in the middle of the main-display-glass support, the viewing glass can be removed as follows:
  1) Lift the glass up.
  2) Swing the bottom edge of the glass out slightly forward.
  3) Drop the glass down so that its' top edge is slightly below the bottom edge of the speaker grille.
  4) Now, holding the glass by its' top edge and bottom edge, lift up and out.
- To reinstall the viewing glass, reverse this procedure.

REMOVAL OF THE HEADER (ATTRACT) GLASS AND/OR THE FLUORESCENT LIGHT ASSEMBLY AND/OR THE SPEAKER(S)

1. UPRIGHT MODEL:

- **Turn the power to the game off.**

- Removal of the header (attract) glass:
  The glass is held in place by the speaker grille at the bottom and a retaining bracket at the top.
  The retaining bracket is secured to the cabinet top by five tamper-resistant screws. Remove these screws by using a special wrench provided in the Hardware and Bag Assembly.
  Remove the retaining bracket and slide up the header glass. This exposes the fluorescent light assembly.
  The fluorescent light tube may be replaced at this time.
  *** WARNING: If you drop a fluorescent tube and it breaks, IT WILL IMPLODE! Use care in handling.**
  To reinstall the header glass, reverse this procedure.

- Removal of the fluorescent light assembly (see picture on page 2-9):
  Be sure the power to the game has been turned off.
  Disconnect it from it's power cable.
  Remove the fluorescent light assembly's three mounting screws and then remove the assembly from the cabinet.
  To reinstall the fluorescent light assembly, reverse this procedure.

- Removal of the speaker(s):
  Be sure the power to the game has been turned off.
  Remove the header glass and disconnect cabling from the speaker(s).
  NOTE: To remove one or both speakers, it is NOT required to remove the speaker grille.
  The grille is held to the cabinet with tamper-resistant screws. Each speaker is secured to the wooden speaker panel by two carriage bolts and two nuts. Remove the speaker(s) by removing the nuts and sliding the bolts out of the grille.
  To reinstall the speaker(s), reverse this procedure.

VOLUME CONTROL POT / OPTION SWITCH LOCATIONS

The volume control pot is located, along with the credit switch and the self-test switch, just inside the cabinet on the right side of the coin door frame. The option switch is located as shown in the attached Monoboard reference drawing. For adjustment, it can be reached through the game's rear access door.

To make the sounds louder, turn the volume pot clockwise as you face it.

To make the sounds less loud, turn the volume pot counterclockwise as you face it.

SELF-TEST MODE

The Self-Test mode is a special mode for checking the game switches and computer functions. It is the most complete way of checking for proper game operation and is quite easy to use.

The Self-Test mode may be entered at any time and from any mode of operation. Simply locate the black slide switch inside the Coin Box compartment and slide it to the Self-Test position. With this switch in the Self-Test postion, activate the slam switch located on the Coin Door. The game will enter the Self-Test mode immediately and display the following test menu....

1. SELF DIAGNOSTICS
2. SWITCHES & SOUNDS
3. GRID DISPLAY

TO POSITION CURSOR, MOVE MIDDLE JOYSTICK UP OR DOWN.
TO EXECUTE TEST, PUSH MIDDLE "JUMP" BUTTON.

1. SELF DIAGNOSTICS: This test is designed to effectively locate and identify any malfunction of the on-board computer. When selected, the game enters this mode immediately and begins scanning the memory stored in rom and ram. If a defective component is found during the scan, that component and it's location will be displayed on screen. It will take about 15 seconds to perform the entire test.

2. SWITCHES & SOUNDS: The SWITCHES portion of this test is designed to confirm the operation of all player inputs and devices in the game. For example, when you wish to test the coin switches on the coin door, you would enter this test and activate the coin switches. If the switches are operating properly, the screen will display the words COIN CHUTE 1 or COIN CHUTE 2 depending on which coin switch has been activated. All inputs, pin controls, service switches, etc. may be tested in the same manner. To exit this test, activate the coin door slam switch.

   The SOUNDS portion of this test will cause a unique sound to be emitted for every switch that be manually activated in the game except for: 1) option dipswitches and 2) switches of joysticks. If the test detects that the game's sound board is defective, then No Sounds will be emitted.

3. GRID DISPLAY: This test was designed to display a crosshatch pattern used in adjusting the color monitor. This pattern may be used to adjust convergence, color balance, vertical linearity, and vertical/horizontal size. To exit this test, activate the coin door slam switch.

IMPORTANT NOTE: There is **NO** battery back up provided for this game. All logic & memory functions will be retained thru dip switch settings.

www.basementarcade.com

RAMPAGE U. R.

OPTION SWITCH SETTINGS

////////////////////// SWITCH NO. 2 - AT A13 - LOCATED ON MONOBOARD //////////////////////

DURING GAME PLAY:	SW#1	SW#2	SW#3	SW#4	SW#5	SW#6	SW#7	SW#8	SW#9 NOT USED	SW#10
DIFFICULTY LEVEL 1 FACTORY SETTING	OFF	OFF								
DIFFICULTY LEVEL 0-EASY	ON	OFF								
DIFFICULTY LEVEL 2-ADVANCED	OFF	ON								
* SCORE OPTION - ON			OFF							
SCORE OPTION - OFF			ON							
REGULAR PLAY				OFF						
FREE PLAY				ON						
1 COIN / 1 CREDIT					OFF	OFF				
2 COINS/ 1 CREDIT					ON	OFF				
1 COIN / 2 CREDITS					OFF	ON				
ATTRACT SOUNDS							OFF			
NO ATTRACT SOUNDS							ON			
GAME PLAY								OFF		
** RACK ADVANCE								ON		
NORMAL VIDEO										OFF
FREEZE VIDEO										ON

* ALLOWS PLAYER TO RETAIN POINT TOTAL WHEN HE "BUYS BACK IN" WITHIN A FIXED TIME LIMIT.

** SERVICE BUTTON ADVANCES RACK

FACTORY SETTING - ALL LOGIC SWITCHES SET IN THE "OFF" POSITION

PART NO. M051-00E36-B008

www.basementarcade.com

P.C. BOARD REFERENCE DRAWING

FOR MONOBOARD SYSTEM

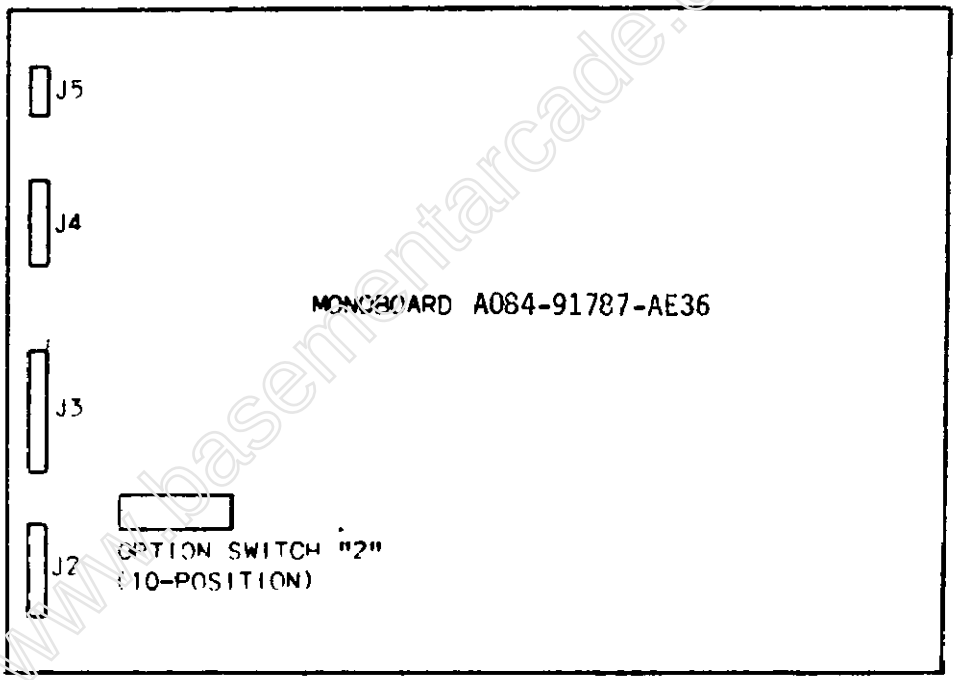

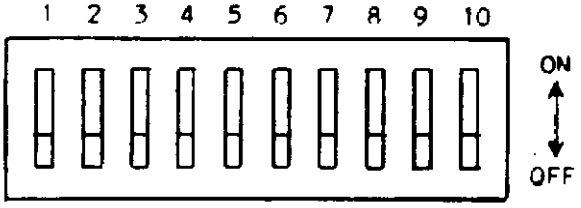

www.basementarcade.com

INTRODUCTION

This manual offers generalized troubleshooting procedures for common types of malfunctions which can be applied to most video games. We will not attempt to give you specific instructions for troubleshooting particular games because this would involve hundreds of pages of more repetitive instructions, differing only in the specific details of each game.

The most common problems occur in harness components such as the coin acceptor, player controls, interconnecting wiring, etc. These areas are covered in moderate detail.

The TV Monitor and Game Logic Printed Circuit Boards (PCB's) provide their fair share of problems too, but not to the extent of the harness and its component parts.

As you already know, the Game Logic PC Boards are complex devices. Each contains a great number of different interrelated circuits. The major changes which give each game its own particular individuality are accomplished in the EPROMS and other Integrated Circuit devices that are installed on each of these PC Boards.

GENERAL TROUBLE SHOOTING SUGGESTIONS

The first step in troubleshooting is to correctly identify the malfunctions symptoms. This includes not only the circuits or features malfunctioning, but also those still operational. A carefully trained eye will pick up other clues to what's wrong as well. For instance, a game in which the computer functions fail completely just after money was collected may have a quarter shorting the PCB traces. Often an experienced troubleshooter will be able to spot the cause of a problem even before opening the cabinet.

After all the clues are carefully considered, the possible malfunctioning areas can be narrowed down to one or two good suspects. Those areas can be examined by a process of elimination until the cause of the malfunction is discovered.

HARNESS COMPONENT TROUBLESHOOTING

Typical problems falling in this category are coin and credit problems, power problems, and failure of individual features.

NO GAME CREDIT - - For example, a prospective game player inserts a quarter or token and is not awarded a game. The first thing to check is whether or not the quarter or token is returned. If it was returned, the malfunction most certainly lies in the coin acceptor itself. First, use a set of test coins (both old and new) to ascertain that the player's coin is not undersize or underweight. If your test coins are also returned, coin acceptor servicing is indicated. Generally, the cause of this particular problem is a maladjusted magnet gate. Normally, this will mean slightly closing the magnet gate by turning the adjusting screw out a bit.

If the quarter or token is not returned and there is no game credit, the cause of the malfunction may be in one of several areas. First, try operating the coin return button; if the coin is returned, the problem is most likely in the magnet gate. Enlarge the gap according the coin acceptor manufacturers service procedures. If this does not cure the problem, remove the coin acceptor, clean it, and perform the manufacturers suggested major adjustment procedure.

If the trapped coin is not returned when the wiper lever is actuated, you may have an acceptor jammed by a slug, gummed up with beer, a jammed coin chute, or mechanical failure of the acceptor mechanism. In this case, first check for the slug that will generally be trapped against the magnet. If a slug is found, simply remove it and test the acceptor. If the chute is blocked, remove the acceptor and remove the jammed coins. If there is actual failure of the acceptor, remove the unit and repair as indicated by the acceptor manufacturers service procedures.

If the coin is making its way through the acceptor (that is, falling into the coin box), yet there is still no game credit, you either have a mechanical failure of the coin switch or electrical failure of the coin and credit circuits. The first place to begin is by checking the coin switch. Most of these switches are the make/break variety of micro switch. They are checked for continuity between the "NO", "NC", and "C" terminals. When **not** actuated, the "NC" and "C" terminals should be continuous and the "NO" terminal open. When actuated, the "NO" and "C" terminals should be continuous and the "NC" terminal open. If the coin switch checks good, inspect the solder connections to the coin switch terminals to be sure there is good contact at this point. If necessary, use a continuity tester and check from the terminal lug on the switch to the associated PCB trace. This will tell you if there is a continuous line all the way to the credit circuit.

If the coin switch wires do check good, the problem is in one of the game logic boards - - most likely in the coin and credit circuitry.

If you do get a game credit when a coin is deposited, but the game will not start when the one or two player start button is pressed, there may be a problem in the start switch, the interconnecting wiring, or the game logic boards. First, check the switch. If the switch is OK, proceed to check the wiring. Again, make sure you go from the terminal lug on the switch to the PCB trace. This way, you will check the terminal contact as well as the PCB edge connector contact. If the wiring is continuous, proceed to check the PCB credit circuit. If not, check each section of the wiring, until the discontinuity is located. If the wiring is OK, the problem must lie in the games logic boards.

TRANSFORMER AND LINE VOLTAGE PROBLEMS

Your game **MUST** have the correct line voltage to operate properly. If the line voltage drops too low, one of the games logic circuits will disable the credit acceptance circuit. The point at which the games logic circuits will fail to function is approximately 105 volts AC.

Low line voltage may have many causes. Line voltage normally fluctuates a certain amount during the day as the total usage varies. Peak usage times occur mainly at dawn and/or dusk. So if your games problem seems to be related to the time of day, this may be a factor. A large load connected to the same line as the game (such as a large air conditioner or other device with an exceptionally large electric motor) may drop the line voltage significantly when starting up. This drop can result in an intermittent credit problem. In addition, poor connections in the location wiring, plug, or line cord may also cause a significant drop in power. Cold solder joints in the games harness, especially in areas like the transformer connections, interlock switch, or fuse block, may also produce the same results, although probably on a more permanent basis.

Sometimes location owners (especially in bars) replace light switches with dimmer rheostats, and the game is sometimes on the same line. Obviously, the voltage available to the game is going to drop dramatically when the dimmer is turned down.

In any case, the way to check for proper line voltage is with your VOM. Set the VOM to the 250 VAC scale and stick the probes into the wall outlet the game was connected to. If it's OK here, check the transformer primary connections. If you do not get 117 VAC, examine the solder joints on the transformer, fuse block, and interlock switch. If you do get 117 VAC, the problem must be either in the transformer, harness connections, or in the PCB power supply.

If you suspect the transformer, check its secondaries with the VOM set to the 50 VAC scale and correlate the readings with the legend on the side of the transformer. The transformer must also be correctly grounded, so check the ground potential as well, especially if there is a hum bar rolling up or down the Monitor screen.

NO POWER, NO PICTURE - - If the Monitor screen is completely dark, first look in back of the Monitor to see if the CRT filament is glowing. If it is, try adjusting the brightness control. If no luck here, put your ear near the Monitor and listen for the high-pitched B+ hum produced by the flyback transformer. If you get the hum but no picture, and you have tried adjusting the brightness, major Monitor servicing is indicated.

If the monitor seems completely dead, check the rest of the game to see if it has power. If it doesn't, go directly to the wall outlet and check there. If OK there, check the game fuse(s), interlock switch, and interconnecting wire lengths.

Sometimes it is difficult to tell if a slow-blow fuse has blown. If in doubt, check it using any of the VOM "R" scales.

HARNESS PROBLEMS - - Other harness problems include blowing fuses and malfunctioning controls. The repeating blown-fuse problem can sometimes be quite exasperating to solve. Short circuits have the tendency to occur in areas almost impossible to find. First, try inserting a new fuse as old fuses age and sometimes blow without cause. If the new fuse also blows, you definitely have a short.

The best way to approach this problem is by disconnecting devices that may be causing the problem, such as the TV Monitor, the various PCB's one at a time, and the isolation transformer. Disconnect the devices by **FIRST** turning the game off, disconnecting it from its wall outlet. Remove the blown fuse and connect your VOM across the terminals of the fuse block (this will save blowing a fuse each time you want to check the circuit). Set your VOM to one of its resistance scales. You should be reading a short. If not you probubly have a part that only shorts out after it is heated up - we'll cover this in a minute. So, assuming you are reading a short on your VOM, disconnect the components from their cabling one at a time, checking the VOM after each one is disconnected. When the short disappears, you have just disconnected the bad component. If all components are disconnected and the short still remains, the problem is in the harness and only patient exploration will reveal its location. Carefully examine all the wiring, looking for terminals that may be touching, metal objects such as coins shorting the connections, or burned insulation. If necessary, use the VOM to check each suspected wire.

OK, now lets assume that you connected your VOM across the fuse block terminals as stated above and you did not read a short. This most likely means that you have a component somewhere in that game that **ONLY** goes bad **AFTER** it heats up. It checks good when its cold. In this case, turn the game off and disconnect **ALL** of its components. Install a known good fuse in the fuse block. And turn the game on. If the fuse does not blow after a few minutes, you know that it is not anything to do with the wire harness. (In this instance, it shouldn't be, actually. But it never hurts to check.) Next, turn the game off again and reconnect **ONE** component. Turn the game back on and wait a few minutes to see if the fuse blows. If it does not, turn the game off again and reconnect another single component.

Turn the game back on and wait a few minutes to see if the fuse blows. Repeat this procedure until the fuse blows. When it does blow, the last component you connected has the part on it that is going bad after it warms up and is shorting out.

MALFUNCTIONING CONTROLS - - The most common problem here is the bad potentiometer (pot). Typically, a bad pot will cause the image on the screen to jump when it reaches a certain point. The only cure for this one is to install a new pot.

If a feature that is operated by a switch (for example, joysticks, foot pedals, control panel buttons) does not operate at all, check the switch with a VOM or continuity tester to verify its operation. If the switch does not check good, replace it. If the switch is OK, you should suspect the input to the switch from the PCB. In this case, get out the harness and logic schematics and check to see what kind of input is supposed to be at this switch. In many cases, the input will be +5 volts DC. If so, use the VOM to check its presence with the game turned on. Normally, the switch is used to pull a +5 volt DC line LOW to GROUND or to pull a LOW line HIGH. If the PCB output is missing, check the wire length from the PCB. If you find the signal at the PCB trace, the wire length or connection is at fault. If there is no signal at the PCB trace, begin exploring the PCB using the logic schematics and game manual.

www.basementarcade.com

SECTION 2

ILLUSTRATED PARTS BREAKDOWN

www.basementarcade.com

RAMPAGE U.R. – 3 PLAYER – FRONT

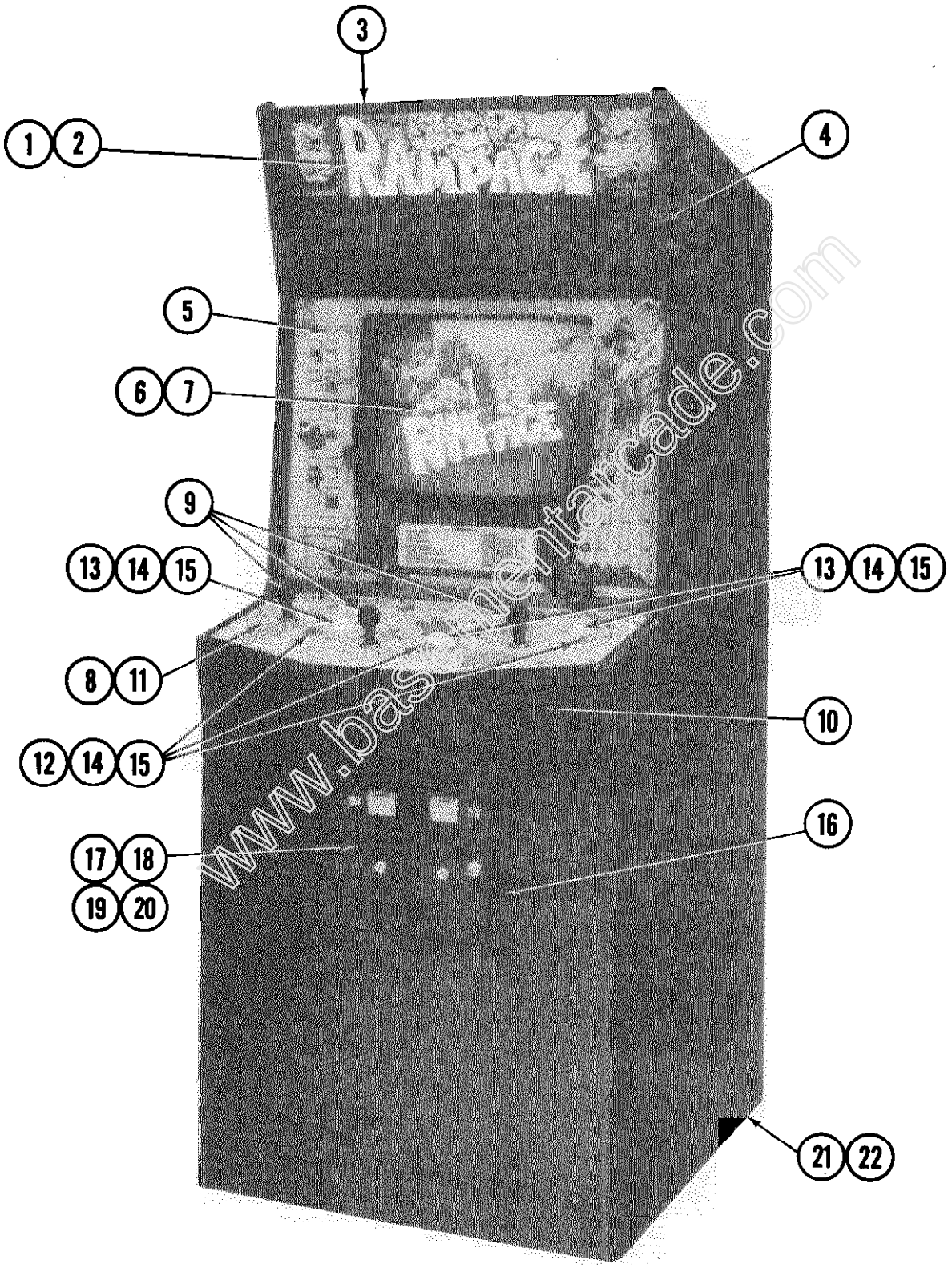

www.bassnetarcade.com

RAMPAGE U.R. - 3 PLAYER - FRONT PARTS LIST

ORDER BY PART NUMBER **ONLY**

ITEM	PART NO.	DESCRIPTION
1	0E36-00900-00XF	HEADER GLASS: SCREENED
2	A595-00011-0000	HEADER FLUORESCENT LIGHT ASSY.
3	0574-00903-0700	HEADER RETAINING BRKT.
*	0017-00101-0138	#8 X 5/8 TORX TAMPER PROOF SCREW (10 REQ'D.)
*	0017-00009-0522	LONG RAM KEY T-20 (FOR ABOVE SCREW)
4	0E36-00102-00XF	BLACK SPEAKER GRILLE
*	0017-00003-0576	5-1/4" SPEAKER - 8 OHM, 15W (2 REQ'D.) (NOT SHOWN)
5	0017-00042-0314	BEZEL: 19" INJECTION MOLDED
6	0E36-00901-00XF	MAIN VIEWING GLASS
7	0017-00003-0465	WELLS-GARDNER - 19" COLOR DUAL SYNCH HORIZONTAL MTG. MONITOR
	AE36-00501-0000	CONTROL SHELF
8	0E36-00501-0000	CONTROL SHELF
9	0017-00009-0645	JOYSTICK - ASSY. 4/8 - WAY (3 REQ'D.)
10	AE36-00010-00XF	CONTROL - APRON WELD ASSY.
11	0E36-00903-00XF	OVERLAY
12	0017-00042-0304	BUTTON: PUSH: ROUND: RED (3 REQ'D.)
13	0017-00042-0300	BUTTON: PUSH: ROUND: WHITE (3 REQ'D.)
14	0017-00032-0093	PUSHBUTTON SWITCH W/HOLDER, WHITE (6 REQ'D) (NOT SHOWN)
15	0017-00103-0054	5/8 X 11 PAL NUT (6 REQ'D.) (NOT SHOWN)
*	0017-00009-0534	BASSICK CLAMP (2 REQ'D.) (NOT SHOWN)
*	0555-00901-0000	PIN: LOCATING (MOLDED) (8 REQ'D.) (NOT SHOWN)
16	0090-00002-04BK	COIN DOOR FRAME: LARGE BLACK DOUBLE
17	A982-00014-0000	U.S.A. 25¢ COIN DOOR & CABLE ASSY.
*		**NOT PART OF ABOVE ASSEMBLY & MUST BE ORDERED SEPARATELY**

www.bestarcadegames.com

RAMPAGE U.R. - 3 PLAYER - FRONT PARTS LIST (CONT'D.)

ORDER BY PART NUMBER **ONLY**

ITEM	PART NO.	DESCRIPTION
18	0017-00009-0477	CASH BOX: MOLDED (NOT SHOWN)
19	0950-00009-0477	COVER: COIN BOX (NOT SHOWN)
20	0950-00901-0000	BASKET: COIN BOX - WIRE (NOT SHOWN)
21	0017-00102-0048	LEG LEVELERS (4 REQ'D.)
22	0017-00103-0026	NUT 3/8 -16 HEX (FOR LEG LEVELERS) (4 REQ'D.)

www.basementarcade.com

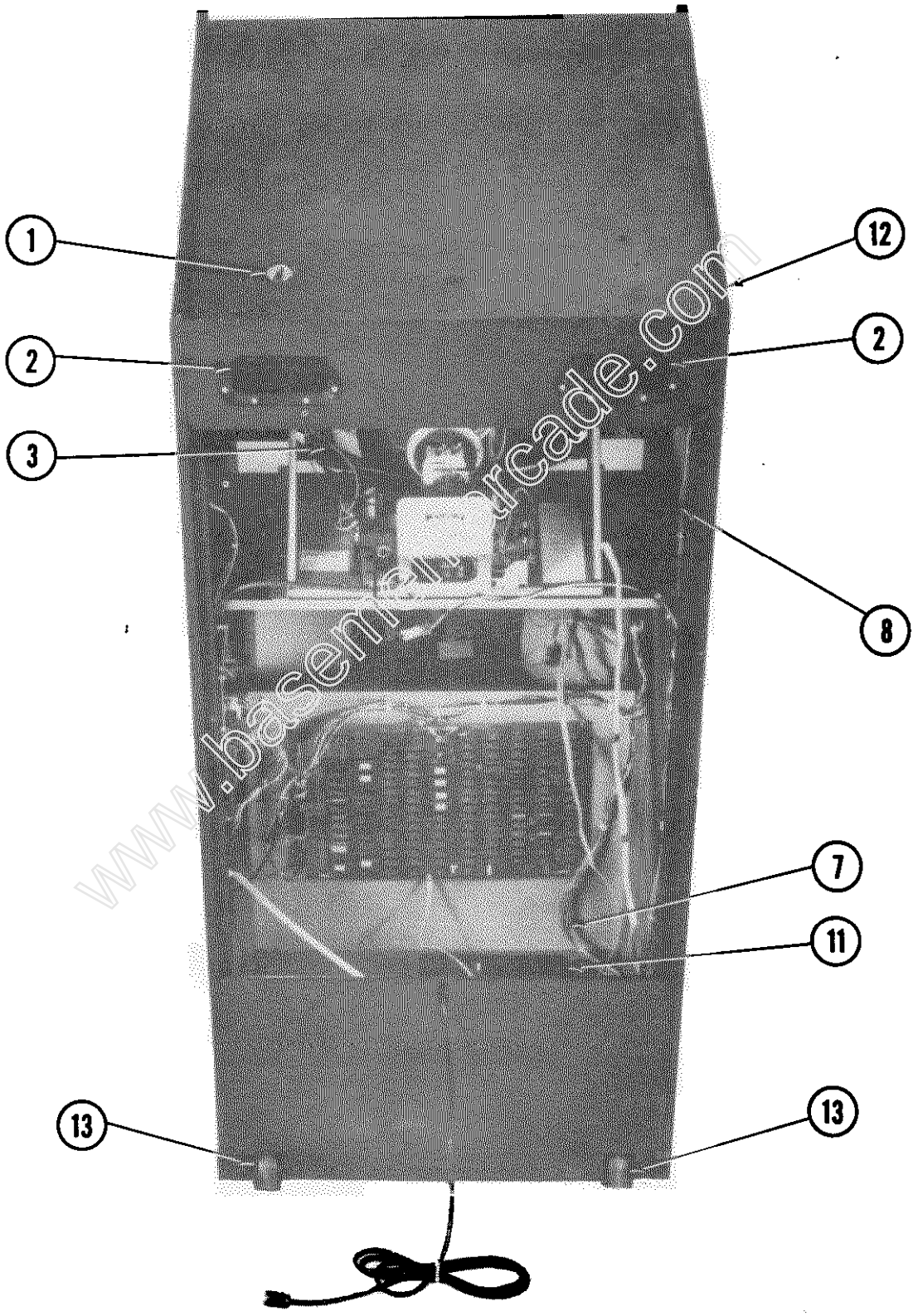

www.basementarcade.com

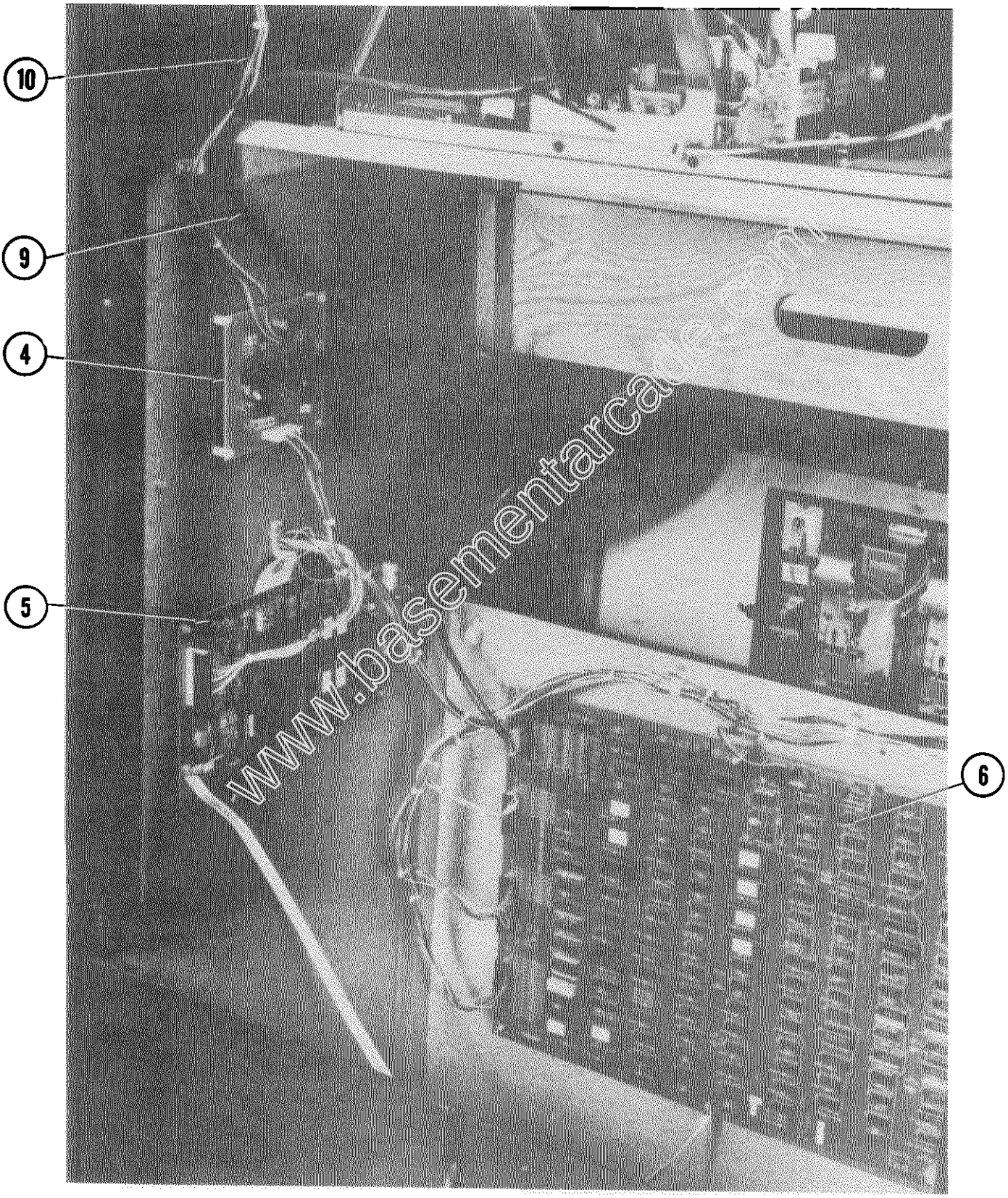

www.basementarcade

RAMPAGE U.R. - 3 PLAYER - REAR ACCESS PARTS LIST

ORDER BY PART NUMBER **ONLY**

ITEM	PART NO.	DESCRIPTION
1	A945-00062-0000	ON-OFF SWITCH & PLATE ASSY.
	0017-00032-0105	SWITCH: 2PST 6 AMP
	0567-00106-0500	PLATE: MTG. - SWITCH
2	0894-00916-0000	PLASTIC PULL & VENT (2 REQ'D.)
3	0017-00003-0462	WELLS-GARDNER - 19" COLOR DUAL SYNCH HORIZONTAL MTG. MONITOR
4	AA11-00017-0000	DUAL POWER AMP P.C.B. W/SPACERS
	B084-90910-F000	DUAL POWER AMP P.C.B. ASSY.
	0017-00042-0320	SPACER: SELF RETAINING FOR #8 SCREW (4 REQ'D.)
5	AE36-00012-0000	SOUNDS GOOD P.C.B. ASSY.
	B084-91863-AE36	PROGRAMMED SOUNDS GOOD P.C.B.
	0017-00042-0320	SPACER: SELF RETAINING FOR #8 SCREW (4 REQ'D.)
6	AE36-00011-0000	MONOBOARD W/SPACERS ASSY.
	B084-91787-AE36	PROGRAMMED MONOBOARD ASSY.
	0017-00042-0320	SPACER: SELF RETAINING FOR #8 SCREW (6 REQ'D.)
7	AE36-00006-0000	MASTER CABLE W/BRKT. ASSY. (INCLUDES FOLLOWING 4 ITEMS)
	0017-00032-0007	SWITCH: SPDT SLIDE 4 AMP
	0515-00107-0000	BRKT: CREDIT: TEST-SWITCH: VOLUME
	0017-00032-0051	BUTTON: SWITCH, RED
	105E-00001-0017	POT.: 0-1K CBN 1/2W
8	AE36-00008-0000	HIGH VOLTAGE CABLE ASSY.
9	AE36-00002-0000	VIDEO CABLE ASSY.
10	AE36-00003-0000	AUDIO CABLE ASSY.
11	A945-00059-0200	POWER CHASSIS: 130VA - SWITCHING W/O SWITCH
	AE36-00500-0000	CABINET ASSY. (INCLUDES ITEMS 12 & 13)

www.basementarcade.com

RAMPAGE U.R. - 3 PLAYER - REAR ACCESS PARTS LIST (CONT'D.)

ORDER BY PART NUMBER **ONLY**

ITEM	PART NO.	DESCRIPTION
12	0E36-00500-0000	CABINET
13	A961-00007-0000	CASTER-WHEEL ASSY. (2 REQ'D.)
		ADDITIONAL PARTS LIST
	0E36-00300-0000	CATALOG: RAMPAGE U.R. - 3 PLAYER
	M051-00E36-A007	TAG: OPTION SWITCH SETTINGS
	AE36-00009-0000	REAR DOOR ASSY. (INCLUDES FOLLOWING 5 ITEMS)
	0E36-00502-0000	REAR DOOR (WOOD)
	0017-00005-0050	DOOR LOCK W/2 INDIVIDUAL KEYS
	0017-00005-0209	LOCK PLATE
	0017-00009-0490	VENT GRILLE - 5-5/8 SQ. IN. (4 REQ'D.)
	0639-00116-00XF	CAM: OFFSET 30 DEGREES

www.basementarcade.com

HEADER FLUORESCENT LIGHT ASSEMBLY
PART NO. A595-00011-0000

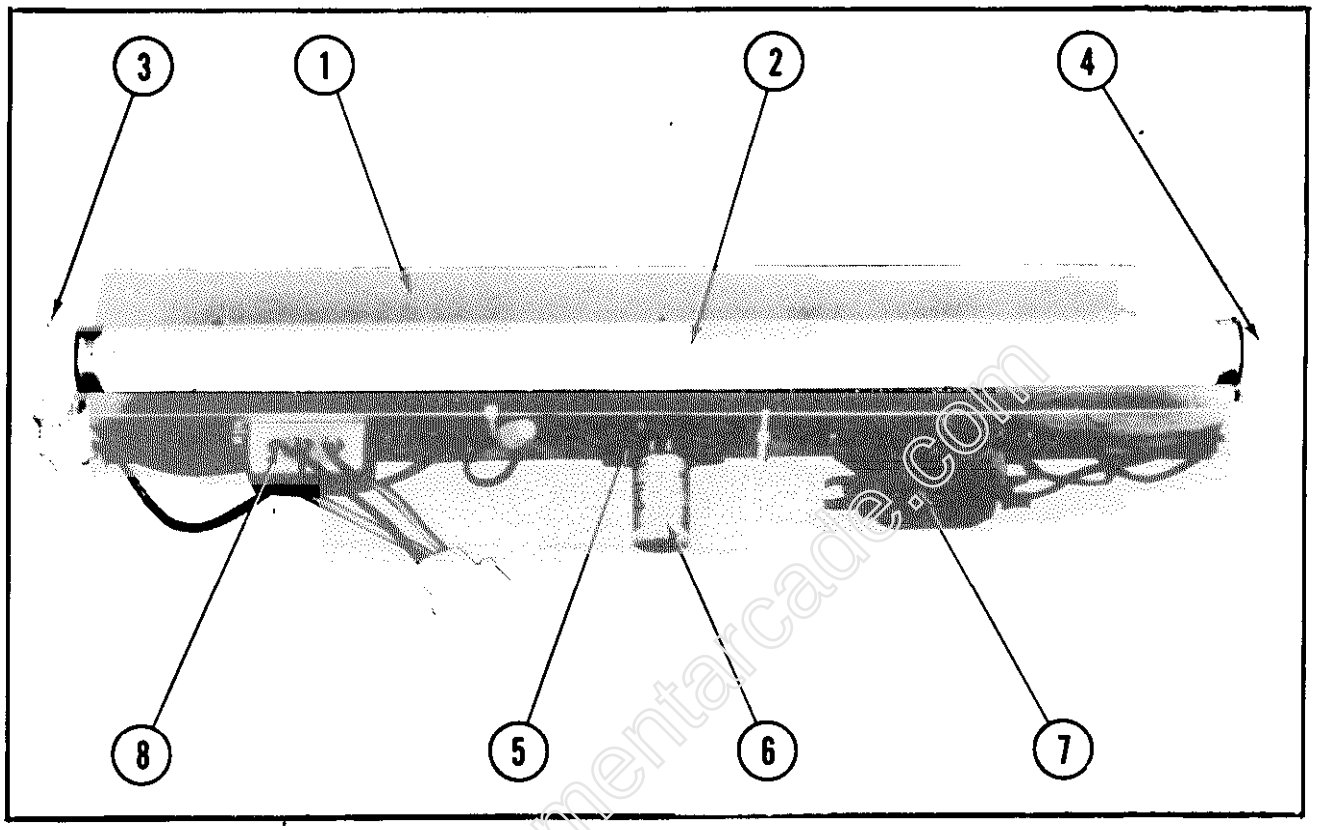

HEADER FLUORESCENT LIGHT ASSY.-PARTS LIST
PART NO. A595-00011-0000

ORDER BY PART NUMBER **ONLY**

ITEM	PART NO.	DESCRIPTION
1	0595-00105-0000	FLUORESCENT BRKT.
2	0017-00003-0043	18" COOL WHITE FLUORESCENT LAMP
3	0017-00003-0445	LAMP LOCKS (2 REQ'D.)
4	0017-00031-0036	FLUORESCENT SOCKET (2 REQ'D.)
5	0017-00003-0412	FLUORESCENT STARTER HOLDER W/LEADS
	0017-00101-0347	#6-32 X 1/2 PHIL. RND. HD. M.S. (4 REQ'D.)
6	0017-00003-0019	FLUORESCENT STARTER
7	0017-00003-0026	BALLAST
	0017-00101-0598	#8-32 X 5/16 SLT. HEX HD. SCR. (3 REQ'D.)
8	A961-00042-0000	LINE FILTER ASSY. (NO LONGER USED)

www.basementarcade.com

Monroe Electronics 4/8-Way Joystick Assembly
Part No. 0017-00009-0645

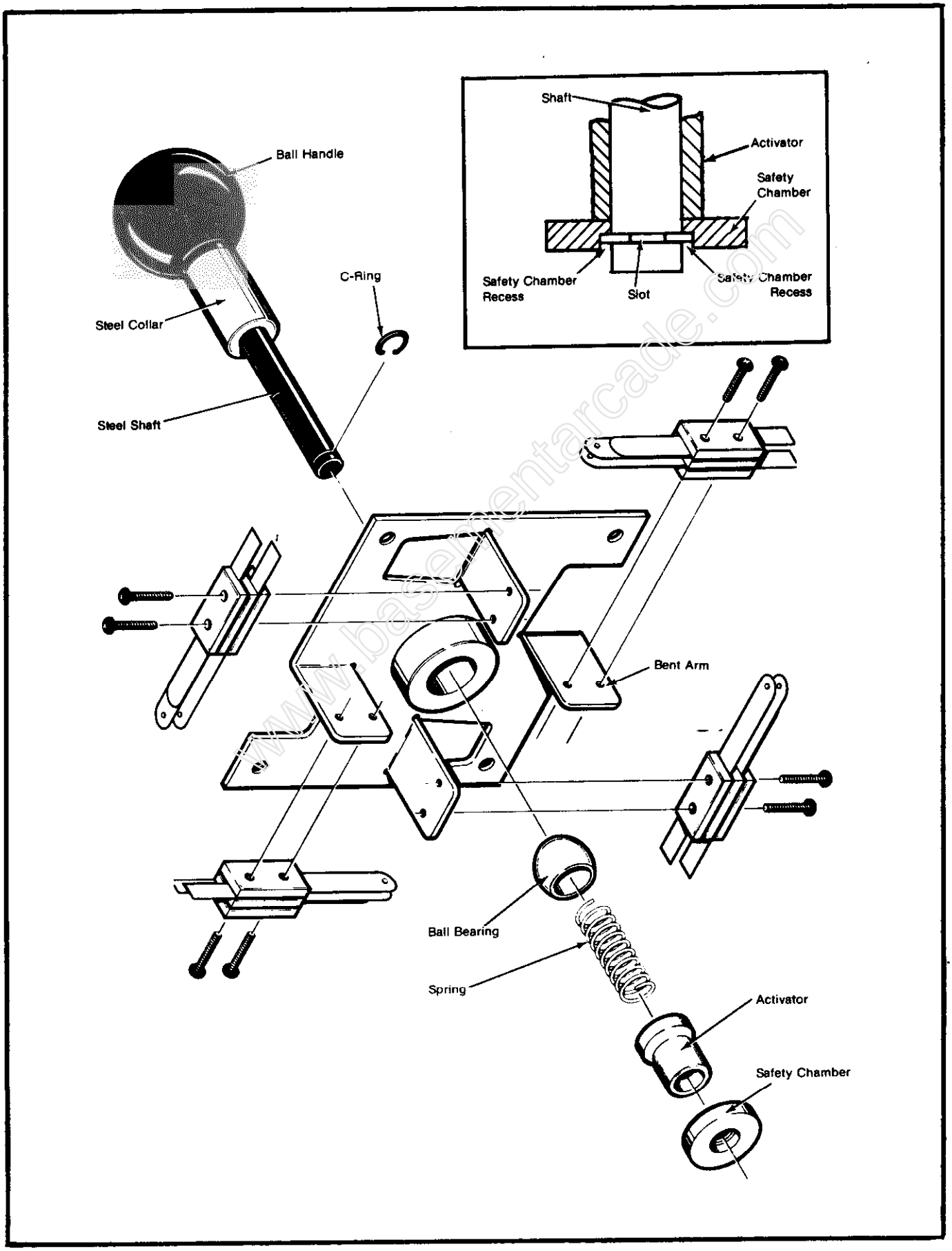

www.basementarcade.com

FRONT DOOR ASSEMBLY – U.S.A. 25¢
PART NO. A982–00014–0000

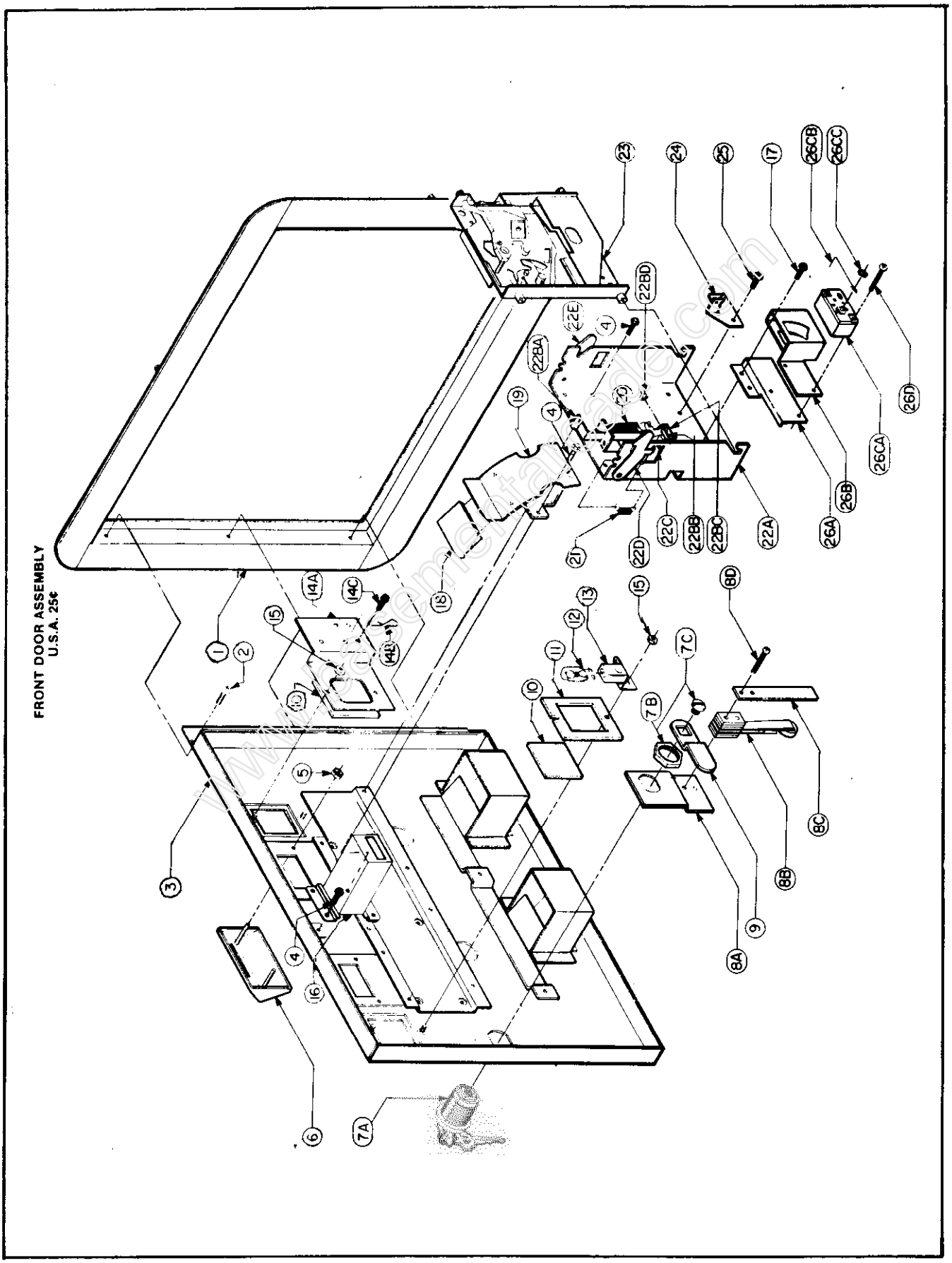

FRONT DOOR ASSEMBLY - U.S.A. 25¢ - PARTS LIST
PART NO. A982-00014-0000

ORDER BY PART NUMBER **ONLY**

ITEM	PART NO.	DESCRIPTION
1	0090-00002-04BK	DOUBLE ENTRY COIN DOOR FRAME
2	0017-00101-0121	#6-32 X 5/16 PHIL. TRS. HD. SCR. (3 REQ'D.)
3	A090-00072-06BK	DOUBLE ENTRY COIN DOOR
4	0017-00101-0123	#8 X 1/4 UNSLOT. HEX HD. SCREW (12 REQ'D.)
5	0017-00103-0059	PUSH NUT (4 REQ'D.)
6	0090-00912-0000	COIN ENTRY PLATE - 25¢ (2 REQ'D.)
7A	0017-00005-0200	LOCK - INDIV. KEYED W/2 KEYS
7B	0017-00103-0079	3/4 HEX NUT
7C	0017-00101-0125	#10 X 1/4 SLOT. PAN HD. SCREW
8	A090-00096-0000	ANTI-SLAM SWITCH & BRKT. ASSY.
8A	0090-00185-00XF	DOOR TILT SWITCH BRKT.
8B	A090-00095-0000	DOOR ANTI-SLAM SWITCH
8C	0090-00126-01XF	SWITCH BACK-UP PLATE
8D	0017-00101-0155	#4-40 X 9/16 PHIL. PAN HD. (2 REQ'D.)
9	0017-00005-0238	DOOR CAM
10	0090-00903-9500	25¢ WINDOW (2 REQ'D.)
11	0090-00143-0000	COIN PLEX RETAINER
12	0017-00003-0219	12 VOLT LAMP - G.E. #194 (2 REQ'D.)
13	0017-00031-0048	WEDGE SOCKET W/BRKT. (2 REQ'D.)
14	A090-00100-0000	CABLE & KEY HOOK BRKT. ASSY.
14A	0090-00179-0000	CABLE & SWITCH MTG. BRKT.
14B	0017-00007-0019	KEY HOOK
14C	0017-00101-0123	#8 X 1/4 UNSLOT. HD. SCR. (2 REQ'D.)

www.basementarcade.com

FRONT DOOR ASSEMBLY - U.S.A. 25¢ - PARTS LIST, CONT.
PART NO. A982-00014-0000

ORDER BY PART NUMBER **ONLY**

ITEM	PART NO.	DESCRIPTION
15	0017-00103-0084	#6-32 HEX NUT W/SEMS (4 REQ'D.)
16	A090-00089-0000	COIN METER W/DIODE
17	0017-00101-0124	#6 X 1/4 UNSLOT HEX HD. SCR. (4 REQ'D.)
18	0090-00911-0000	INSULATOR (2 REQ'D.)
19	A090-00087-0000	COIN CHUTE & TOP ASSY. (2 REQ'D.)
	A090-00081-00XF	COIN CHUTE & BRKT. ASSY.
	0090-00172-00XF	COIN CHUTE TOP
	0017-00101-0140	#4-40 X 5/16 PHIL. PAN HD. (3 REQ'D.)
	0017-00007-0162	COTTER PIN (4 REQ'D.)
20	0010-00134-0000	SPRING (2 REQ'D.)
21	0010-00181-0100	SPRING (4 REQ'D.)
22	A090-00115-0000	COIN ACCEPTOR FRAME SUB-ASSY. (2 REQ'D.)
22A	A090-00118-0000	COIN ACCEPTOR & BUSH. ASSY.
22B	A090-00116-0000	REJECT LEVER ASSY. (2 REQ'D.)
22BA	0090-00182-00XF	REJECT LEVER
22BB	0090-00129-00XF	PIVOT POST
22BC	0090-00167-00XF	PIVOT LEVER
22BD	0017-00100-0012	E-RING
22C	0017-00007-0083	1/8 X 1-5/8 ROLL PIN
22D	0093-00145-01XF	LATCH - LEFT
22E	0093-00145-00XF	LATCH - RIGHT
	0017-00072-0036	120 X .218 X 7/32 RIVET (2 REQ'D.)
	0090-00910-00XF	REJECT BUTTON

www.basementarcade.com

FRONT DOOR ASSEMBLY - U.S.A 25¢ - PARTS LIST, CONT.
PART NO. A982-00014-0000

ORDER BY PART NUMBER **ONLY**

ITEM	PART NO.	DESCRIPTION
	0090-00183-0000	BUTTON STOP
	0017-00101-0140	#4-40 X 5/16 PHIL. PAN HD.
23	0017-00005-0003	COIN ACCEPTOR W/STRING CUTTER (2 REQ'D.) (OR)
23	0017-00005-0214	COIN ACCEPTOR W/STRING CUTTER (2 REQ'D.)
24	A090-00064-0100	ANTI-PENNY DEVICE (2 REQ'D.)
25	0017-00101-0099	#6 X 1/4 SLT. HEX HD. M.S. (2 REQ'D.)
26	A090-00077-0000	COIN GUIDE & SWITCH ASSY. (2 REQ'D.)
26A	0090-00162-00XF	COIN SWITCH MTG. BRKT.
26B	0017-00005-0203	COIN SWITCH CHUTE
26C	A090-00059-0400	COIN SWITCH & WIRE ASSY.
26CA	0017-00005-0195	COIN SWITCH
26CB	0010-00599-0000	COIN SWITCH WIRE
26CC	0017-00007-0015	PUSH-ON RING
26D	0017-00101-0147	#4-40 X 3/4 PHIL. PAN. HD. (2 REQ'D.)
		ADDITIONAL PARTS LIST
	0090-00184-0000	COIN SWITCH COVER (2 REQ'D.)

www.basementarcade.com

POWER CHASSIS: 130VA (SWITCHING)
PART NO. A945-00059-0200

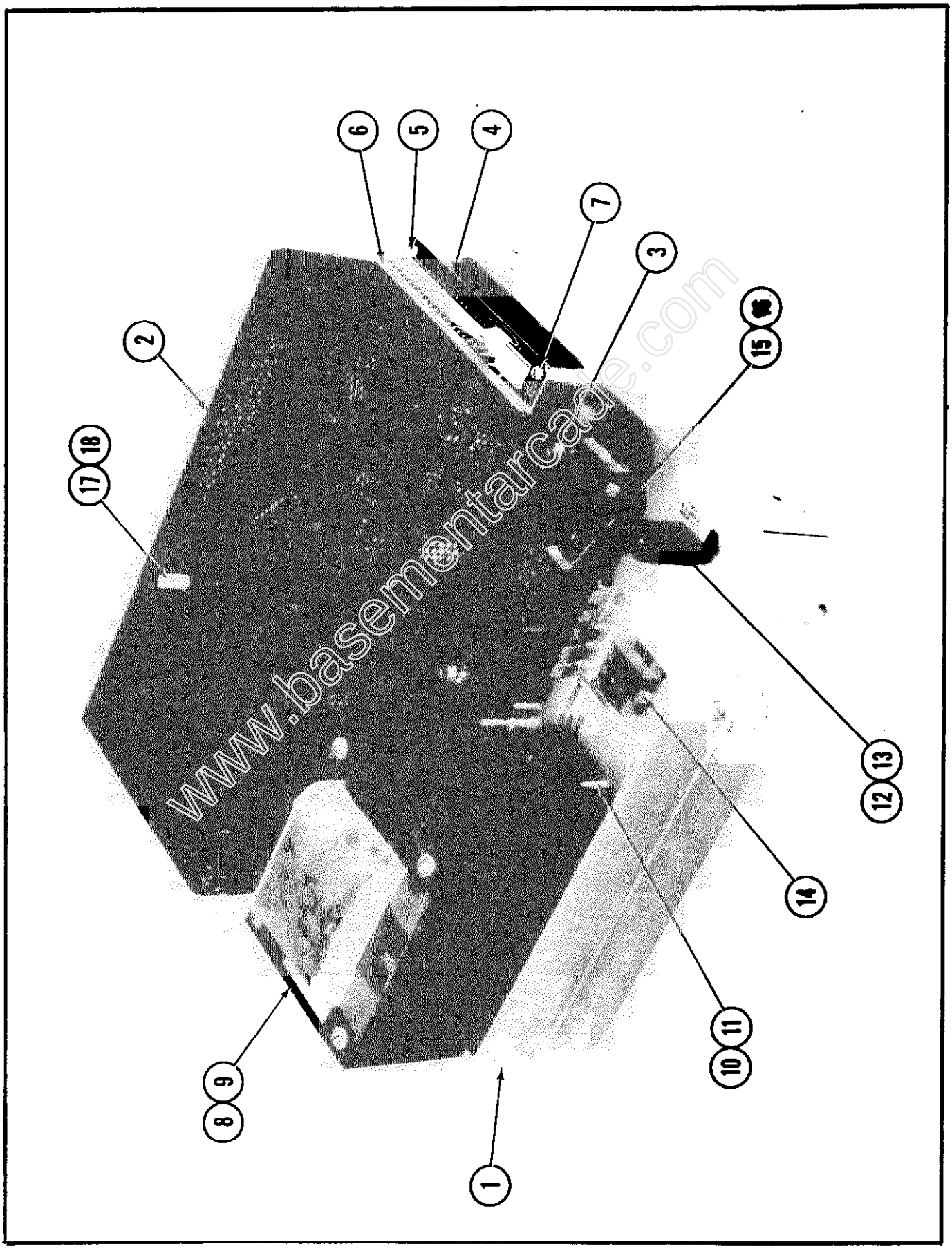

www.basementarcade.com

POWER CHASSIS: 130VA (SWITCHING) PARTS LIST
PART NO. A945-00059-0200

ORDER BY PART NUMBER **ONLY**

ITEM	PART NO.	DESCRIPTION
1	A945-00057-01XF	CHASSIS SUB-ASSEMBLY
2	0945-00117-01XF	POWER SUPPLY COVER
3	0017-00101-0123	8 X 4 UNSLOT HEX HD. SCREW (8 REQ'D.)
4	0017-00003-0543	SWITCHING POWER SUPPLY - 125VA
5	0017-00042-0663	LOCKING P.C. BRD. SPACER (4 REQ'D)
6	0540-00138-2100	CABLE PROTECTOR - 5"
7	0017-00101-0134	6-32 X 4 PHIL. ROUND HD. SCREW
8	MT00-00136-A000	ISOLATION TRANSFORMER W/O SHIELD ASSY.-115V., 50/60 HZ.
9	0017-00103-0061	8-32 HEX NUT W/SEMS (4 REQ'D) (NOT SHOWN)
10	0017-00003-0114	LINE FILTER - 5 AMP, 115VAC (NOT SHOWN)
11	0017-00101-0067	6 X 6 PHL. PAN HD. (2 REQ'D)
12	0017-00003-0433	FUSE HOLDER
13	0017-00003-0263	FUSE MDA, 3AG, 4 AMP, 115 VAC
14	A945-00030-0600	CONNECTOR & CABLE ASSEMBLY
15	0017-00021-0370	TERMINAL STRIP
16	0017-00101-0140	4-40 X 5 PHL. PAN HD. SCREW (2 REQ'D)
17	0017-00009-0580	CAPACITOR ALIGNMENT TOOL
18	0945-00912-0000	ADJ. TOOL HANDLE
		ADDITIONAL PARTS LIST
	115E-00001-0004	VARISTOR-METAL OXIDE (UNDER CHASSIS)
	0017-00021-1110	2 POSITION TERMINAL BARRIER STRIP (UNDER CHASSIS)
	0017-00101-0780	6 X 8 PHIL. PAN HD. SCREW (UNDER CHASSIS)
	0017-00103-0084	6-32 HEX NUT W/SEMS (UNDER CHASSIS)

www.basementarcade.com

SECTION 3

COMPONENT LAYOUTS, SCHEMATICS & WIRING DIAGRAM

www.basementarcade.com

Power Supply Voltage and Symbols

Symbol	Voltage	Operating Circuit
●	15V	Vert. Osc. Sync Blanking CRT Cut-Off
⊗	130V	Horiz. Osc. Horz. Drive Horz. Output Vert. Output
⊙	175V	Video Output

★

SERVICE TECHNICIAN WARNING
X-RAY RADIATION PRECAUTION:

THIS PRODUCT CONTAINS CRITICAL ELECTRICAL AND MECHANICAL PARTS ESSENTIAL FOR X-RAY RADIATION PROTECTION.
FOR REPLACEMENT PURPOSES, USE ONLY TYPE PARTS SHOWN IN THE PARTS LIST.

A

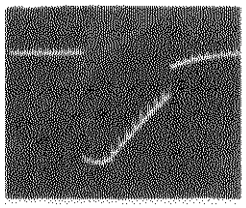

1V/DIV 200uSEC/DIV

Q351 COLLECTOR

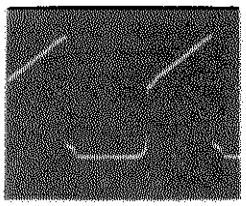

20V/DIV 10uSEC/DIV

TP-81

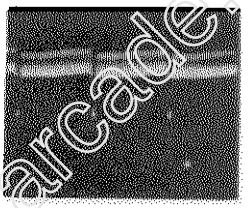

0.5/DIV 5MSEC/DIV

TP-31 DC COUPLED
BOTTOM LINE = 0 VDC

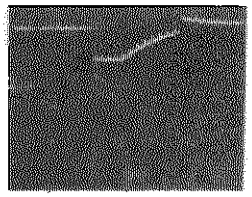

2V/DIV 200MSEC/DIV

J402-3

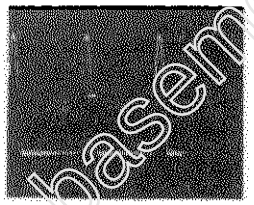

5V/DIV 20uSEC/DIV

B

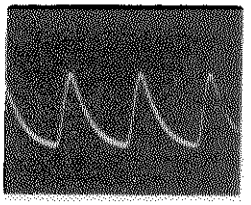

0.5/DIV 20u SEC/DIV

I.C. 301, PIN 3

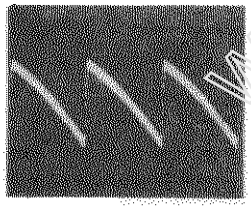

1V/DIV 5MSEC/DIV

F

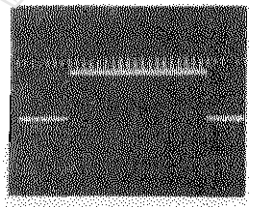

1V/DIV 20u SEC/DIV

I.C. 301, PIN 15

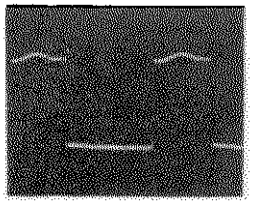

1V/DIV 10uSEC/DIV

TP-82

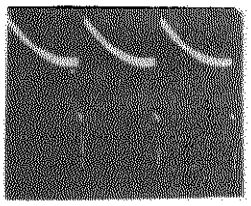

20V/DIV 5MSEC/DIV

TP-31, AC COUPLED

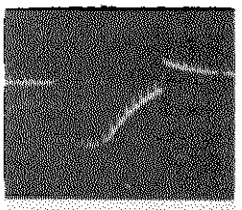

1V/DIV 200uSEC/DIV

D

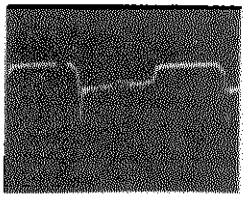

2V/DIV 10uSEC/DIV

I.C. 301, PIN 13

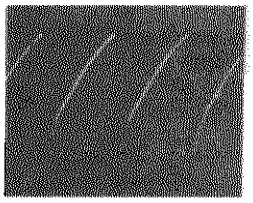

1VDIV 200uSEC/DIV

NEGATIVE SIDE OF C303

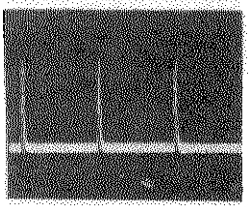

2V/DIV 5MSEC/DIV

F

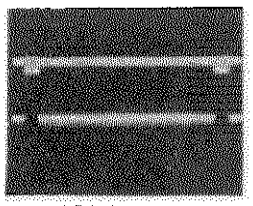

1VDIV 2MSEC/DIV

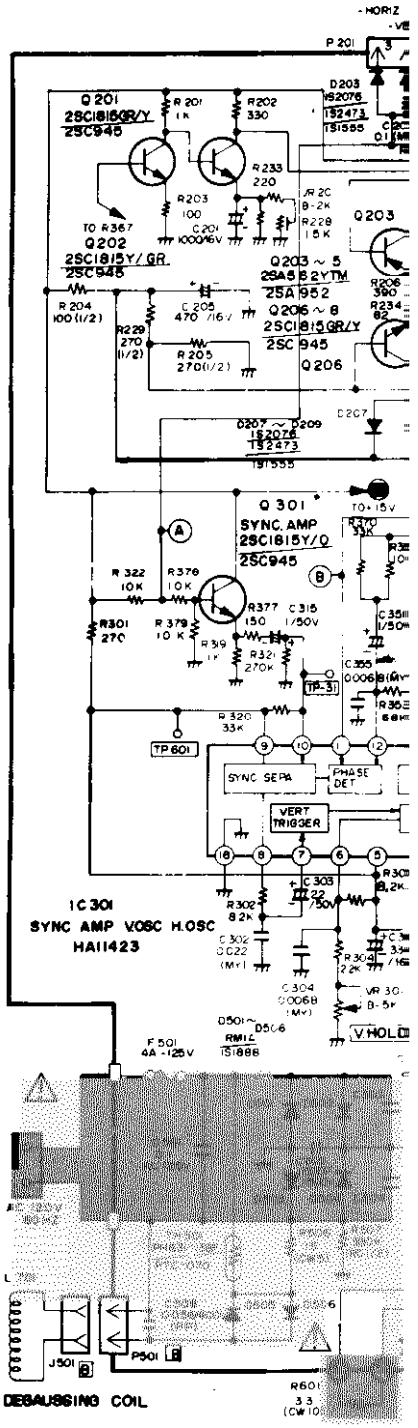

www.basementarcade.com

R SCHEMATIC DIAGRAM
IK4906, 19K4951, 19K4956

CAUTION: FOR CONTINUED SAFETY, REPLACE SAFETY CRITICAL COMPONENTS ONLY WITH MANUFACTURER'S RECOMMENDED PARTS.
AVERTISSEMENT: POUR MAINTENIR LE DEGRE DE SECURITE DE L'APPAREIL NE REMPLACER LES COMPOSANTS DONT LE FONCTIONNEMENT EST CRITIQUE POUR LA SECURITE QUE PAR DES PIECES RECOMMANDEES PAR LE FABRICANT.

OSCILLOSCOPE WAVEFORM PATTERN

The waveforms shown are as observed on the wide band oscilloscope with the monitor turned to a reasonably strong signal and a normal picture. The voltages shown on each waveform are the approximate peak amplitudes.

If the waveforms are observed on the oscilloscope with a poor high frequency response, the corner of the pulses will tend to be more rounded than those shown and the amplitude of any high frequency pulse will tend to be less.

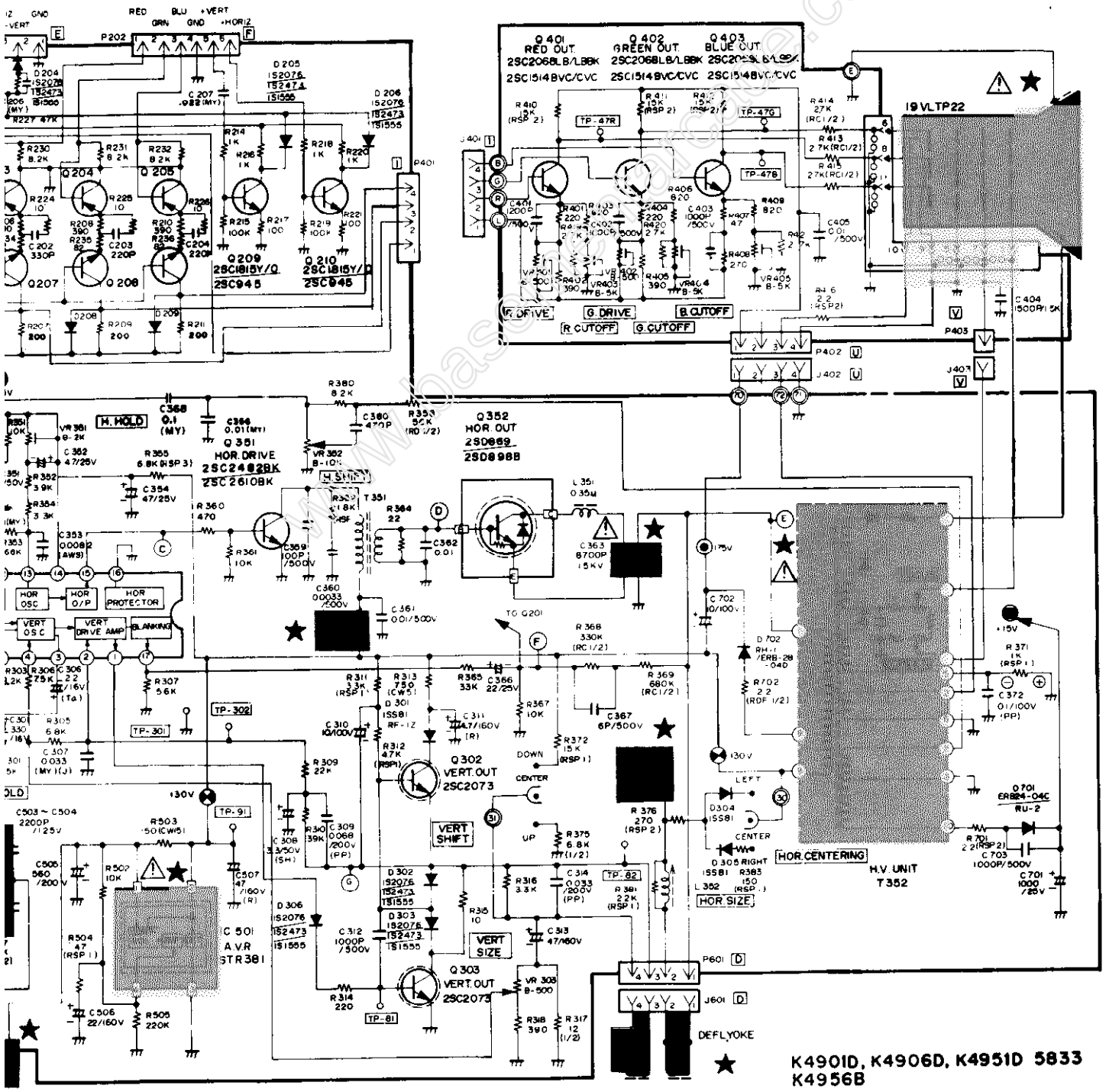

K4901D, K4906D, K4951D 5833
K4956B

REPLACEMENT PARTS LIST

This monitor contains circuits and components included specifically for safety purposes.

For continued protection no changes should be made to the original design, and components shown in shaded areas of schematic, or ⚠★ on parts list should be replaced with exact factory replacement parts.

The use of substitute parts may create a shock, fire, radiation or other hazard. Service should be performed by qualified personnel only.

MAIN BOARD

RESISTORS

Ref. No.	Part No.	Description
R201	203X6500-645	1K Ohm, 5%, 1/4W Carbon
R202	203X6500-523	30 Ohm, 5%, 1/4W Carbon
R203	203X6500-405	100 Ohm, 5%, 1/4W Carbon
R204	203X6700-327	100 Ohm, 5%, 1/2W Carbon
R205	203X6700-421	270 Ohm, 5%, 1/2W Carbon
R206	203X6500-540	390 Ohm, 5%, 1/4W Carbon
R207	340X2201-934	200 Ohm, 5%, 1/4W Carbon
R208	203X6500-540	390 Ohm, 5%, 1/4W Carbon
R209	340X2201-934	200 Ohm, 5%, 1/4W Carbon
R210	203X6500-540	390 Ohm, 5%, 1/4W Carbon
R211	340X2201-934	200 Ohm, 5%, 1/4W Carbon
R214	203X6500-645	1K Ohm, 5%, 1/4W Carbon
R215	203X6501-126	100K Ohm, 5%, 1/4W Carbon
R216	203X6500-645	1K Ohm, 5%, 1/4W Carbon
R217	203X6500-405	100 Ohm, 5%, 1/4W Carbon
R218	203X6500-645	1K Ohm, 5%, 1/4W Carbon
R219	203X6501-126	100K Ohm, 5%, 1/4W Carbon
R220	203X6500-645	1K Ohm, 5%, 1/4W Carbon
R221	203X6500-405	100 Ohm, 5%, 1/4W Carbon
R222	203X6500-762	3.3 Ohm, 5%, 1/4W Carbon
R224	203X6500-169	10 Ohm, 5%, 1/4W Carbon
R225	203X6500-169	10 Ohm, 5%, 1/4W Carbon
R226	203X6500-169	10 Ohm, 5%, 1/4W Carbon
R227	203X6501-044	47K Ohm, 5%, 1/4W Carbon
R228	203X6500-645	1K Ohm, 5%, 1/4W Carbon
R229	203X6700-421	270 Ohm, 5%, 1/2W Carbon
R230	203X6500-863	8.2K Ohm, 5%, 1/2W Comp.
R231	203X6500-863	8.2K Ohm, 5%, 1/2W Comp.
R232	203X6500-863	8.2K Ohm, 5%, 1/2W Comp.
R233	203X6500-468	180 Ohm, 5%, 1/4W Carbon
R234	340X2820-934	82 Ohm, 5%, 1/4W Carbon
R235	340X2820-934	82 Ohm, 5%, 1/4W Carbon
R236	340X2820-934	82 Ohm, 5%, 1/4W Carbon
R301	203X6500-508	270 Ohm,5%, 1/4W Carbon
R302	203X6500-863	8.2K Ohm, 5%, 1/4W Carbon
R303	203X6500-863	8.2K Ohm, 5%, 1/4W Carbon
R304	203X6500-724	2.2K Ohm, 5%, 1/4W Carbon
R305	203X6500-842	6.8K Ohm, 5%, 1/4W Carbon
R306	203X6003-201	7.5K Ohm, 2%, 1/4W Carbon
R307	203X6500-825	5.6K Ohm, 5%, 1/4W Carbon
R309	203X6500-965	22K Ohm, 5%, 1/4W Carbon
R310	203X6500-988	39K Ohm, 5%, 1/4W Carbon
R311	203X6500-762	3.3K Ohm, 5%, 1/4W Carbon
R312	203X9014-741	4.7K Ohm, 5%, 1/4W Carbon
R313	204X1450-537	1K Ohm, 5%, 5W Carbon
R314	203X6500-481	220 Ohm, 5%, 1/4W Carbon
R315	203X6500-169	10 Ohm, 5%, 1/4W Carbon
R316	203X6500-762	3.3K Ohm, 5%, 1/4W Carbon
R317	203X6700-107	12 Ohm, 5%, 1/2W Carbon
R318	203X6500-540	390 Ohm, 5%, 1/4W Carbon
R319	203X6500-645	1K Ohm, 5%, 1/4W Carbon
R320	203X6501-002	33K Ohm, 5%, 1/4W Carbon
R321	203X6501-224	270K Ohm, 5%, 1/2W Carbon
R322	203X6500-886	10K Ohm, 5%, 1/4W Carbon
R351	203X6500-886	10K Ohm, 5%, 1/4W Carbon
R352	203X6500-785	3.9K Ohm, 5%, 1/4W Carbon
R353	203X6501-086	68K Ohm, 5%, 1/4W Carbon
R354	203X6500-762	3.3K Ohm, 5%, 1/4W Carbon
R355	203X9205-143	6.8K Ohm, 5%, 3W Metal Oxide
R358	203X5601-878	56K Ohm, 5%, 1/2W Carbon
R360	203X6500-56[illegible]	470 Ohm, 5%, 1/4W Carbon
R361	203X6500-88[illegible]	10K Ohm, 5%, 1/4W Carbon
R362	203X9014-645	1.8K Ohm, 5%, 1W Metal Oxide
★R363	204X1527-751	3.9K Ohm, 5%, 7W Metal Oxide
R364	203X6500-246	22 Ohm, 5%, 1/4W Carbon
R365	203X6501-002	33K Ohm, 5%, 1/4W Carbon
R367	203X6500-886	10K Ohm, 5%, 1/4W Carbon
R368	203X5602-185	330K Ohm, 5%, 1/2W Comp.

RESISTORS (CONT.)

Ref. No.	Part No.	Description
R369	203X5602-329	680K Ohm, 5%, 1/2W Comp.
R370	203X6501-002	33K Ohm, 5%, 1/4W Carbon
R371	203X9014-584	1K Ohm, 5%, 1W Metal Oxide
R372	203X9101-119	12K Ohm, 5%, 1W Metal Oxide
R375	203X6700-753	6.8K Ohm, 5%, 1/2W Carbon
R376	203X9104-404	270 Ohm, 5%, 2W Metal Oxide
R377	203X6500-447	150 Ohm, 5%, 1/4W Carbon
R378	203X6500-886	10K Ohm, 5%, 1/4W Carbon
R379	203X6500-886	10K Ohm, 5%, 1/4W Carbon
R380	203X6500-865	8.2K Ohm, 5%, 1/4W Carbon
R381	203X6500-724	2.2K Ohm, 5%, 1W Metal Oxide
R383	203X9014-387	150 Ohm, 5%, 1W Metal Oxide
R502	203X6500-886	10K Ohm, 5%, 1/4W Carbon
R503	204X1700-535	150 Ohm, 5%, 15W Metal Oxide
R504	203X9014-267	47 Ohm, 5%, 1W Metal Oxide
R505	203X6501-209	2.2K Ohm, 5%, 1/4W Carbon
R506	203X9104-105	15 Ohm, 5%, 2W Metal Oxide
R507	203X5602-185	330K Ohm, 5%, 1/2W Comp.
⚠★R601	204X1625-058	3.3 Ohm, 5%, 10W WW
R701	203X9105-141	2.2 Ohm, 5%, 2W Metal Oxide
R702	203X6206-441	2.2 Ohm, 5%, 1/2W Carbon
VR201	204X2070-072	2K Ohm-B Semi-Fixed
VR301	204X2070-084	5K Ohm-B Semi-Fixed
VR303	204X2070-055	500 Ohm-B Semi-Fixed
VR351	204X2070-072	2K Ohm-B Semi-Fixed
VR352	204X2070-072	2K Ohm-B Semi-Fixed

CAPACITORS

Ref. No.	Part No.	Description
C201	203X0014-088	1000 uF, 16V, Electrolytic
C202	202X7200-064	330 pF, 500V, Ceramic
C203	202X7200-043	220 pF, 500V, Ceramic
C204	202X7200-043	220 pF, 500V, Ceramic
C205	203X0014-076	470 uF, 16V, Electrolytic
C206	203X1810-149	0.1 uF, 125V Mylar
C207	349X2232-109	.022 uF, 100V Mylar
C301	203X0014-065	330 uF, 50V Electrolytic
C302	203X1600-563	0.033 uF, 50V Mylar
C303	203X0629-037	3.3 uF, 50V Electrolytic
C304	203X1600-366	0.068 pF, 50V Mylar
C306	203X0412-012	2.2 uF, 16V Tantal
C307	203X1600-634	0.033 uF, 50V Mylar
C308	203X0025-174	3.3 uF, 50V Electrolytic
C309	203X1207-100	0.068 uF, 100V PP
C310	203X0629-061	10 uF, 100V Electrolytic
C311	203X0041-025	10 uF, 160V Electrolytic
C312	202X7050-248	1000 pF, 500V Ceramic
C313	203X0040-052	47 uF, 160V Electrolytic
C314	203X1201-265	0.033 uF, 200V PP
C315	203X0629-023	1 uF, 50V Electrolytic
C351	203X0629-023	1 uF, 50V Electrolytic
C352	203X0619-045	47 uF, 25V Electrolytic
C353	203X1190-015	0.0082 pF, 50V Mylar-PP
C354	203X0619-045	47 uF, 25V Electrolytic
C355	203X1600-366	0.0068 pF, 50V Mylar
C356	202X7050-483	0.01 uF, 500V Ceramic
C359	202X8065-606	100 pF, 500V Ceramic
C360	202X7050-366	0.0033 pF, 500V Ceramic
C361	202X7050-483	0.01 uF, 500V Ceramic
C362	202X7203-032	0.01 uF, 50V Ceramic
⚠★C363	203X1270-911	8700 pF, 1.5 KV PP
★C365	203X1201-265	0.33 uF, 200V PP
C366	203X0019-026	22 uF, 25V Electrolytic
C367	202X8065-162	6 pF, 500V Ceramic
C368	202X7203-032	0.01 uF, 50V Ceramic
C372	203X1207-125	0.1 uF, 100V PP

MAIN BOARD (CONT.)

CAPACITORS (CONT.)

Ref. No.	Part No.	Description
C380	202X7200-087	470 uF, 500V Ceramic
⚠ C501	203X1810-149	0.1 uF, 125V Mylar
⚠ C502	202X7050-282	1500 pF, 500V Ceramic
⚠ C503	202X7810-214	2200 pF, 125V Ceramic
⚠ C504	202X7810-214	2200 pF, 125V Ceramic
C505	203X0220-075	560 uF, 200V Electrolytic
C506	203X0040-034	22 uF, 160V Electrolytic
C507	203X0041-057	47 uF, 160V Electrolytic
C701	203X0019-092	1000 uF, 25V Electrolytic
C702	203X0634-061	10 uF, 100V Electrolytic
C703	202X7050-248	1000 pF, 500V Ceramic

SEMICONDUCTORS

Ref. No.	Part No.	Description
D203	201X2010-159	Diode, IS2076-27
D204	201X2010-159	Diode, IS2076-27
D205	201X2010-159	Diode, IS2076-27
D206	201X2010-159	Diode, IS2076-27
D207	201X2010-159	Diode, IS2076-27
D208	201X2010-159	Diode, IS2076-27
D209	201X2010-159	Diode, IS2076-27
D301	201X2010-165	Diode, ISS81
D302	201X2010-159	Diode, IS2076-27
D303	201X2010-159	Diode, IS2076-27
D304	201X2120-009	Diode, RH-IV
D305	201X2120-009	Diode, RH-IV
D306	201X2010-159	Diode, IS2076-27
⚠ D501	201X3120-216	Diode, RM-1AV
⚠ D502	201X3120-216	Diode, RM-1AV
⚠ D503	201X3120-216	Diode, RM-1AV
⚠ D504	201X3120-216	Diode, RM-1AV
D505	201X3120-216	Diode, RM-1AV
D506	201X3120-216	Diode, RM-1AV
D701	201X2130-234	Diode, RU-2V
D702	201X2120-009	Diode, RH-1V
Q201	200X3181-523	Transistor (NPN) 2SC1815GR
Q202	200X3181-523	Transistor (NPN) 2SC1815GR
Q203	200X4056-260	Transistor (PNP) 2SA562-Y-TM
Q204	200X4056-260	Transistor (PNP) 2SA562-Y-TM
Q205	200X4056-260	Transistor (PNP) 2SA562-Y-TM

SEMICONDUCTORS (CONT.)

Ref. No.	Part No.	Description
Q206	200X3181-523	Transistor (NPN) 2SC1815GR
Q207	200X3181-523	Transistor (NPN) 2SC1815GR
Q208	200X3181-523	Transistor (NPN) 2SC1815GR
Q209	200X3181-523	Transistor (NPN) 2SC1851GR
Q210	200X3181-523	Transistor (NPN) 2SC1851GR
Q301	200X3181-523	Transistor (NPN) 2SC1851GR
Q302	200X3207-306	Transistor (NPN) 2SC2073LBGL2
Q303	200X3207-306	Transistor (NPN) 2SC2073LBGL2
Q351	200X3248-217	Transistor (NPN) 2SC2482BK
Q352	200X4589-802	Transistor (NPN) 2SD898B
IC301	200X2300-033	IC HA11423
⚠★ IC501	200X2600-183	IC STR381

TRANSFORMERS & COILS

Ref. No.	Part No.	Description
L351	201X4710-134	Coil, (RF Choke)
L352	201X5000-083	Coil, Horiz. Size
L701	611X0004-007	Coil, Adg.
T351	202X1300-080	Transformer, Hor. Drive
⚠★ T352	200X9720-301	HV-Unit M-11

MISCELLANEOUS

Ref. No.	Part No.	Description
⚠ F501	204X7120-073	Fuse, 4 Amp. 125V
J602	206X5008-632	Recep W Wire 3P-M-BG
P201	204X9600-466	Plug, PWB 3P-J
P202	204X9601-477	Plug, PWB 6P-Q
P401	204X9600-298	Plug, PWB 4P-B
P501	204X9600-249	Plug, PWB 2P-B
P601	204X9600-304	Plug, PWB 4P-C
TH501	201X0100-112	Thermistor

FINAL ASSEMBLY PARTS

Ref. No.	Part No.	Description
⚠★	88X0138-506	19VLTP22 Pix Tube
	205X9800-158	Lateral/Purity Assembly
⚠★	202X1111-201	Yoke Deflection
	204X9301-255	CRT Socket
	291X5004-262	Automatic Degaussing Coil Unit

NECK BOARD

RESISTORS

Ref. No.	Part No.	Description
R401	203X6000-729	220 Ohm, 5% 1/4W Carbon
R402	203X6500-540	390 Ohm, 5% 1/4W Carbon
R403	203X6000-661	820 Ohm, 5% 1/4W Carbon
R404	203X6000-729	220 Ohm, 5% 1/4W Carbon
R405	203X6500-540	390 Ohm, 5% 1/4W Carbon
R406	203X6000-661	820 Ohm, 5% 1/4W Carbon
R407	203X6000-729	470 Ohm, 5% 1/4W Carbon
R408	203X6000-998	270 Ohm, 5% 1/4W Carbon
R409	203X6000-661	820 Ohm, 5% 1/4W Carbon
R410	203X9104-824	15K Ohm, 5% 2W M.O. Forming
R411	203X9104-824	15K Ohm, 5% 2W M.O. Forming
R412	203X9104-824	15K Ohm, 5% 2W M.O. Forming
R413	203X6000-998	2.7K Ohm, 5% 1/2W Comp.
R414	203X6000-998	2.7K Ohm, 5% 1/2W Comp.
R415	203X6000-998	2.7K Ohm, 5% 1/2W Comp.
R416	203X9105-154	2.2 Ohm, 5% 2W Metal Oxide
R419	203X6500-741	2.7K Ohm, 5% 1/4W Carbon
R420	203X6500-741	2.7K Ohm, 5% 1/4W Carbon
R421	203X6500-741	2.7K Ohm, 5% 1/4W Carbon
VR401	204X2115-014	500 Ohm, -B Semi-Fixed
VR402	204X2115-014	500 Ohm, -B Semi-Fixed
VR403	204X2115-006	5K Ohm, -B Semi-Fixed
VR404	204X2115-006	5K Ohm, -B Semi-Fixed
VR405	204X2115-006	5K Ohm, -B Semi-Fixed

CAPACITORS

Ref. No.	Part No.	Description
C401	202X7050-269	1200 pF, 500V Ceramic
C402	202X7050-248	1000 pF, 500V Ceramic
C403	202X7050-248	1000 pF, 500V Ceramic
C404	202X7050-282	1500 pF, 1.5KV Ceramic
C405	202X7050-483	0.01 uF, 500V Ceramic

SEMICONDUCTORS

Ref. No.	Part No.	Description
Q401	200X3206-800	Transistor (NPN) 2SC2068LB
Q402	200X3206-800	Transistor (NPN) 2SC2068LB
Q403	200X3206-800	Transistor (NPN) 2SC2068LB

MISCELLANEOUS

Ref. No.	Part No.	Description
J401	206X5009-296	RECEP W Wire 4P-E
P402	204X9600-254	Plug, PWB 3P-A
P403	204X9600-981	Plug, Pin 1P-D
P701	204X9601-020	Plug, PWB 4P-E

www.bancmentarade.com

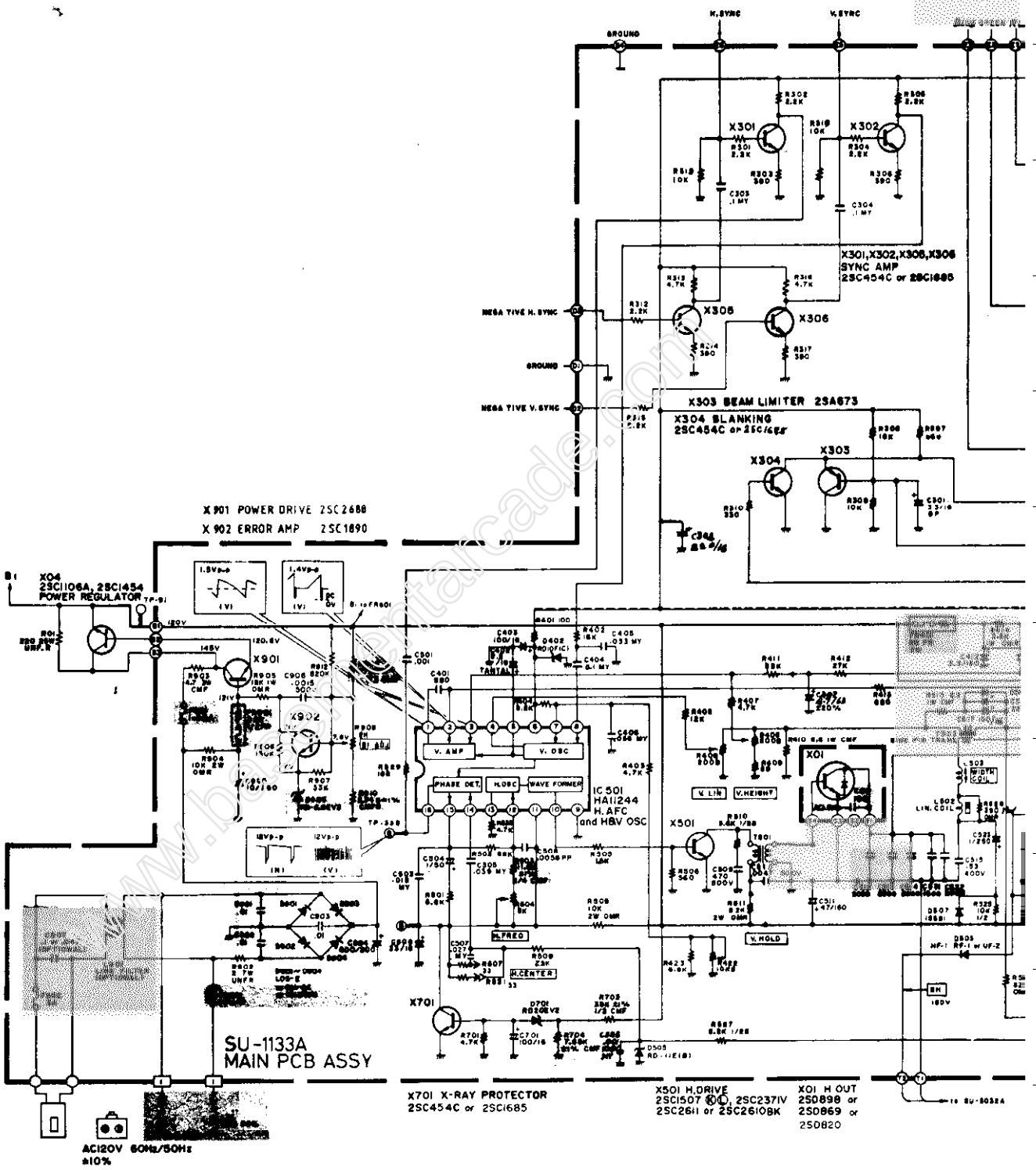
H.SYNC
V.SYNC
GROUND
X301
X302
X301,X302,X305,X306
SYNC AMP
2SC454C or 2SC1685
NEGA TIVE H. SYNC
NEGA TIVE V. SYNC
X305
X306
X303 BEAM LIMITER 2SA673
X304 BLANKING
2SC454C or 2SC1685
X304
X303
X901 POWER DRIVE 2SC2688
X902 ERROR AMP 2SC1890
X04
2SC1106A, 2SC1454
POWER REGULATOR
X901
X902
V. AMP
V. OSC
PHASE DET
H.OSC
WAVE FORMER
IC 501
HA11244
H. AFC
and HBV OSC
V. LIN
V.HEIGHT
X501
X01
V.HOLD
H.FREQ
H.CENTER
X701
SU-1133A
MAIN PCB ASSY
X701 X-RAY PROTECTOR
2SC454C or 2SC1685
X501 H.DRIVE
2SC1507 ⓚⓛ, 2SC2371V
2SC2611 or 2SC2610BK
X01 H OUT
2SD898 or
2SD869 or
2SD820
AC120V 60Hz/50Hz
±10%

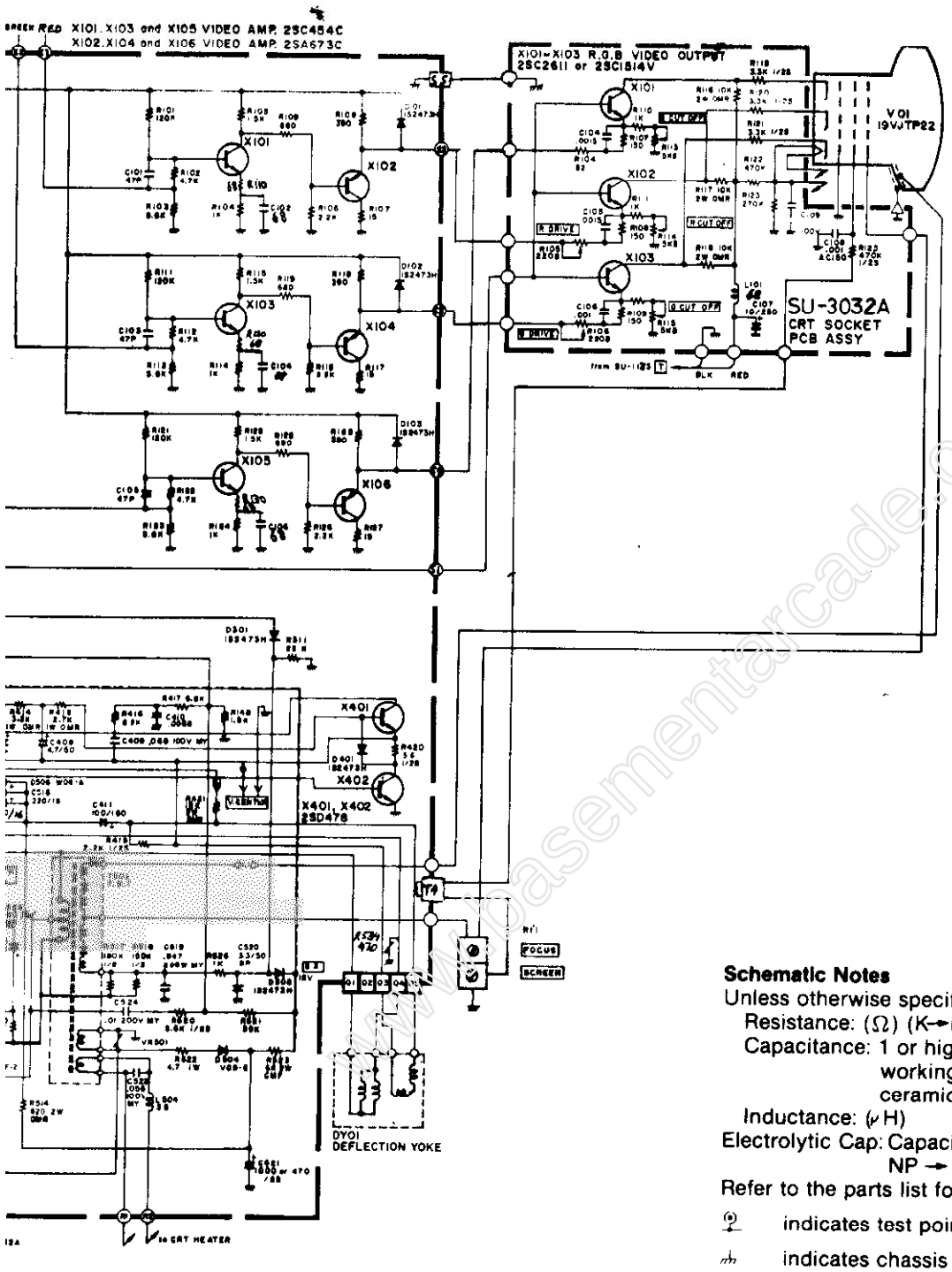

Schematic Notes

Unless otherwise specified

Resistance: (Ω) (K→KΩ, M→MΩ), 1/4 (W) carbon resistor

Capacitance: 1 or higher→ (pF), less than 1→ (μF)
working voltage→ 50 (V)
ceramic capacitor

Inductance: (μH)

Electrolytic Cap: Capacitance Value (μF)/working voltage (V),
NP → non-polar (or bipolar) electrolytic cap.

Refer to the parts list for additional component information.

indicates test point connection

indicates chassis ground unless otherwise specified

Hz indicates cycles per second

For **safety** purposes (and continuing reliability)

⚠ replace all components marked with safety symbol **with** identical type.
NOTE: FR → fusible resistor

00-4147-04
G07-CB0

Parts identification on circuit boards:
e.g. SU1126A (R107 = R1107)
SU3030A (R113 = R3113)

www.basementarcade.com

REPLACEMENT PARTS LIST—ELECTROHOME 19" MONITOR

Components identified by the ⚠ symbol in the PARTS LIST and on the Schematic have special characteristics important to safety.

DO NOT degrade the safety of the set through improper servicing.

Abbreviations for Resistors and Capacitors

Resistor

C R	:	Carbon Resistor
Comp. R	:	Composition Resistor
OM R	:	Oxide Metal Film Resistor
V R	:	Variable Resistor
MF R	:	Metal Film Resistor
CMF R	:	Coating Metal Film Resistor
UNF R	:	Nonflammable Resistor
F R	:	Fusible Resistor

Capacitor

C Cap.	:	Ceramic Capacitor
M Cap.	:	Mylar Capacitor
E Cap.	:	Electrolytic Capacitor
BP E Cap.	:	Bi-Polar (or Non-Polar) Electrolytic Capacitor
MM Cap.	:	Metalized Mylar Capacitor
PP Cap.	:	Polypropylene Capacitor
MPP Cap.	:	Metalized PP Capacitor
PS Cap.	:	Polystyrol Capacitor
Tan. Cap.	:	Tantal Capacitor

NOTE: When ordering replacement parts please specify the part number as shown in this list including part name, and model number. Complete information will help expedite the order.

Use of substitute replacement parts which do not have the same safety characteristics as specified, may create shock, fire or other hazards. For maximum reliability and performance, all parts should be replaced by those having identical specifications.

SERVICE REPLACEMENT PARTS LIST

Symbol	Description	Part Number
	Main P.C.B. Ass'y	SU-1133A
	CRT Socket P.C.B. Ass'y	SU-3032A
	Purity Shield Ass'y	07-220083-03

Outside of the P.C.B. Ass'y

Symbol	Description	Part Number
	Picture Tube 19"	17-7198-03
⚠	⚠Deflection Yoke	A29779-D=21-141-01
	PC Magnet	A75034-B=29-32-01
⚠	⚠Flyback Transf.	A29951-B
⚠	⚠HVR	A46600-A
R05	UNF Resistor 220Ω,25W K	QRF258K-221
C04	C Capacitor 150pF, AC1.5KV	QCZ0101-005
X01	Si. Transistor	2SD870
X02	Si. Transistor	2SC1106A
SC	Screw #8-⅜	31-610818-06
SC	Screw ¼ x ¾ Pix Tube Mtg. (4)	31-601418-12
WA	Pyramidal Lock Washer (4)	33-255-01
	Nut Retainer, Pix Tube Mtg. (4)	33-494-01
	Clip—P.C.B. Support	33-629-02
	Standoff	33-670-010R-02
	Wire Terminal (Gnd. Strap)	34-228-03
	Terminal Lug (Gnd.)	34-33-04
	Groundstrap Assy.	34-574-02
	Grounding Spring	35-212-03
	Wire Hook (Gnd. Strap)	35-3053-02
	Purity Shield Holddown Clamp	35-2348-01
	Support Brkt. RH	35-3890-01
	Support Brkt. LH	35-3890-02
	Chassis Base	38-449-02
	Yoke Wedge (3)	39-1233-01

Purity Shield Ass'y. Parts List

Symbol	Description	Part Number
	Degaussing Coil	21-1007-30
D911, D912	Rectifier 1 Amp 600V (2)	28-22-27
	Pin Terminal (2)	34-708-01
	Pin Terminal Housing	34-709-01
	Purity Shield (2 pcs.)	35-3847-01
	Purity Shield (2 pcs.)	35-3847-02
C911	Capacitor 100nF 10% 400V	48-171544-62
R921	Resistor, Wirewound 33Ω, 4W	42-113301-03
	Fire Retardant Term. Strip 4 Lug	34-492-09

CRT Socket P.C.B. Ass'y (SU-3032A) Parts List

Resistors

Symbol	Description	Part Number
R3105	V R 200	QVZ3234-022
R3106	V R 200	QVZ3234-022
R3113	V R 5K	QVZ3234-053
R3114	V R 5K	QVZ3234-053
R3115	V R 5K	QVZ3234-053
R3116	OM R 10KΩ2W J	QRG029J-103
R3117	OM R 10KΩ2W J	QRG029J-103
R3118	OM R 10KΩ2W J	QRG029J-103
R3119	Comp. R 3.3KΩ½W K	QRZ0039-332
R3120	Comp. R 3.3KΩ½W K	QRZ0039-332
R3121	Comp. R 3.3KΩ½W K	QRZ0039-332

Capacitors

Symbol	Description	Part Number
C3107	E Cap. 10uF 250V A	QEW53EA-106
C3108	C Cap. 1000pF DC1400V P	QCZ9001-102M

www.basemenarcade.com

CRT Socket P.C.B. Ass'y (SU-3032A) Parts List (Cont.)

Coils

Symbol	Description	Part Number
L3101	Peaking Coil	QQL043K-101

Semi-conductors

Symbol	Description	Part Number
X3101	Si. Transistor	2SC1514VC
X3102	Si. Transistor	2SC1514VC
X3103	Si. Transistor	2SC1514VC

Miscellaneous

Symbol	Description	Part Number
⚠	⚠CRT Socket	A76068

Main PCB Ass'y (SU-1133A) Parts List

Resistors

Symbol	Description			Part Number
R1406	V	R	200Ω	QVZ3230-002
R1408	V	R	200Ω	QVZ3230-002
R1410	CMF	R	6.8Ω1W J	QRX019J-6R8
R1414	OM	R	3.3KΩ1W J	QRG019J-332
R1415	OM	R	2.7KΩ1W J	QRG019J-272
R1421	OM	R	12KΩ2W J	QRG026J-123Z
R1422	V	R	10KΩ	QVZ3230-014
⚠FR1401	⚠F	R	68Ω2W K	QRH024K-680M
⚠R1503	⚠CMF	R	11.8KΩ¼W+1%	QRV142F-1182
R1504	V	R	5KΩ	QVZ3230-053
R1509	OM	R	10KΩ2W J	QRG026J-103Z
R1512	OM	R	8.2KΩ2W J	QRG026J-822Z
R1514	OM	R	820Ω2W J	QRG026J-821Z
R1515	CMF	R	8.2Ω1W J	QRX019J-9R2
R1522	CMF	R	4.7Ω1W J	QRX019J-4R7
R1523	OM	R	68Ω2W J	QRG026J-680Z
R1528	OM	R	390Ω1W J	QRG019J-391
R1534	ZN	R		ERZ-C05ZK471
VR1501	ZN	R		ERZ-C05ZK271
⚠R1703	⚠CMF	R	39Ω½W+1%	QRV122F-3902
⚠R1704	⚠CMF	R	7.68KΩ¼W+1%	QRV142F-7681
⚠R1901	⚠Posistor			A75414
R1902	UNF	R	2Ω7W K	QRF076K-2R0
R1903	CMF	R	4.7Ω3W J	QRX039J-4R7
R1904	OM	R	10KΩ2W J	QRG026J-103Z
R1905	OM	R	18KΩ1W J	QRG019J-183
⚠Q1908	⚠CMF	R	47Ω½W+1%	QRV122F-470Z
⚠R1909	V	R	2KΩ	QVP5A0B-023E
R1910	⚠CMF	R	2.74KΩ¼W+1%	QRV142F-2741
⚠FR1901	⚠F	R	220Ω½W K	QRH124K-221M

Capacitors

Symbol	Description			Part Number
C1301	BPE	Cap.	3.3uF 50V A	QEN61HA-335Z
C1402	Tan	Cap.	2.2uF 16V K	QEE51CK-225B
C1407	E	Cap.	4.7uF 6.3V A	QEW51JA-475
C1411	E	Cap.	100uF 160V A	QEW52CA-107
C1412	E	Cap.	3.3uF 160V A	QEW52CA-335
C1508	PP	Cap.	5600uF 50V J	QFP31HJ-562
⚠C1512	⚠PP	Cap.	2000pF DC1500V J	QFZ0082-202
⚠C1513	⚠PP	Cap.	2000pF DC1500V J	QFZ0082-202
⚠C1514	⚠PP	Cap.	2000pF DC1500V J	QFZ0082-202
C1515	PP	Cap.	0.53uF DC1200V J	QFZ0067-534
C1520	BPE	Cap.	3.3uF 50V A	QEN61HA-335Z
C1523	E	Cap.	1uF 160V A	QEW62CA-105Z
C1524	M	Cap.	0.1uF 200V K	QFM720K-104M
⚠C1531	⚠PP	Cap.	2000pF DC1500V J	QFZ0082-202
⚠C1532	⚠PP	Cap.	1500pF DC1500V J	QFZ0082-152
C1904	E	Cap.		QEY0034-001
C1905	E	Cap.	10uF 250V A	QEW52EA-106

Main PCB Ass'y (SU-1133A) Parts List (Cont.)

Coils

Symbol	Description	Part Number
L1502	Linarity Coil	A39835
L1503	Width Coil	C30380-A
L1504	Heater Choke	C30445-A

Transformers

Symbol	Description	Part Number
T1501	Hor. Drive Transf.	A46022-BM
T1503	Side Pin Transf.	C39050-A

Semi-conductors

Symbol	Description	Part Number
IC1501	IC	HA11244
X1101	Si. Transistor	2SC1685(R)
X1102	Si. Transistor	2SA673(C)
X1103	Si. Transistor	2SC1685(R)
X1104	Si. Transistor	2SA673(C)
X1105	Si. Transistor	2SC1685(R)
X1106	Si. Transistor	2SA673(C)
X1301	Si. Transistor	2SC1685(R)
X1302	Si. Transistor	2SC1685(R)
X1303	Si. Transistor	2SA673(C)
X1304	Si. Transistor	2SC1685(R)
X1305	Si. Transistor	2SC1685(R)
X1401	Si. Transistor	2SD478
X1402	Si. Transistor	2SD478
X1501	Si. Transistor	2SC2610BK
X1901	Si. Transistor	2SC2688 (K.L.M.)
X1902	Si. Transistor	2SC1890A (E.F.)
D1101	Si. Diode	W06A
D1102	Si. Diode	W06A
D1103	Si. Diode	W06A
D1301	Si. Diode	1SZ473H
D1401	Si. Diode	1SZ473H
D1402	Zener Diode	RD10F(C)
D1503	Si. Diode	HF-1
D1504	Si. Diode	V09E
D1505	Zener Diode	RD11E(B)
D1506	Si. Diode	W06A
D1507	Si. Diode	1SS81
D1508	Si. Diode	1SZ473H
⚠D1701	⚠Zener Diode	RD20EV2
⚠D1901	⚠Si. Diode	1S1887A
⚠D1902	⚠Si. Diode	1S1887A
⚠D1903	⚠Si. Diode	1S1887A
⚠D1904	⚠Si. Diode	1S1887A
⚠D1905	⚠Zener Diode	RD6.8EV3

Miscellaneous

Symbol	Description	Part Number
⚠F1901	⚠Fuse 1.25A	QMF53U1-1R25S
⚠F1902	⚠UL Fuse 3A	QMF66U1-3R0S

www.bacmantacade.com

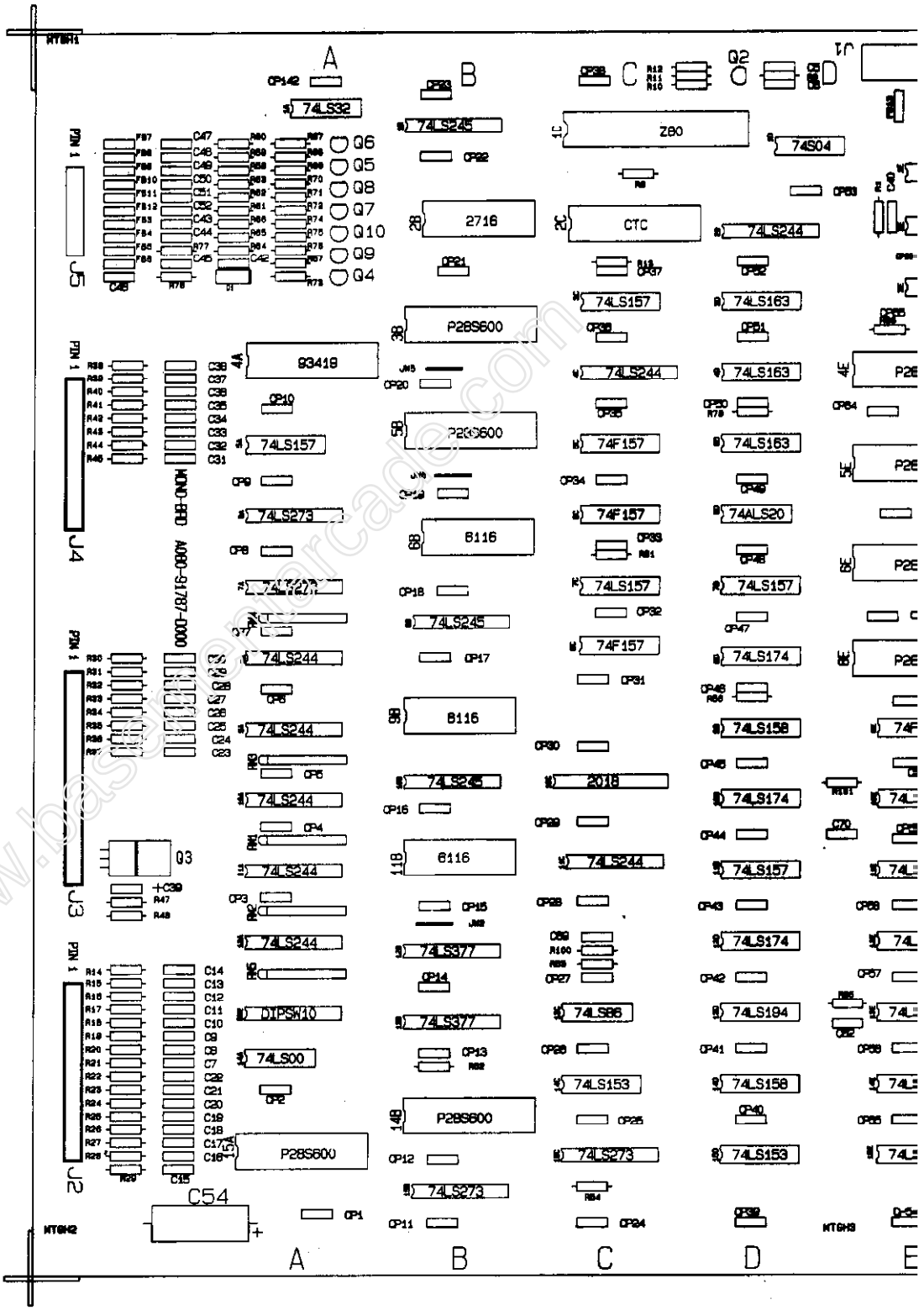

www.basementarcade.com

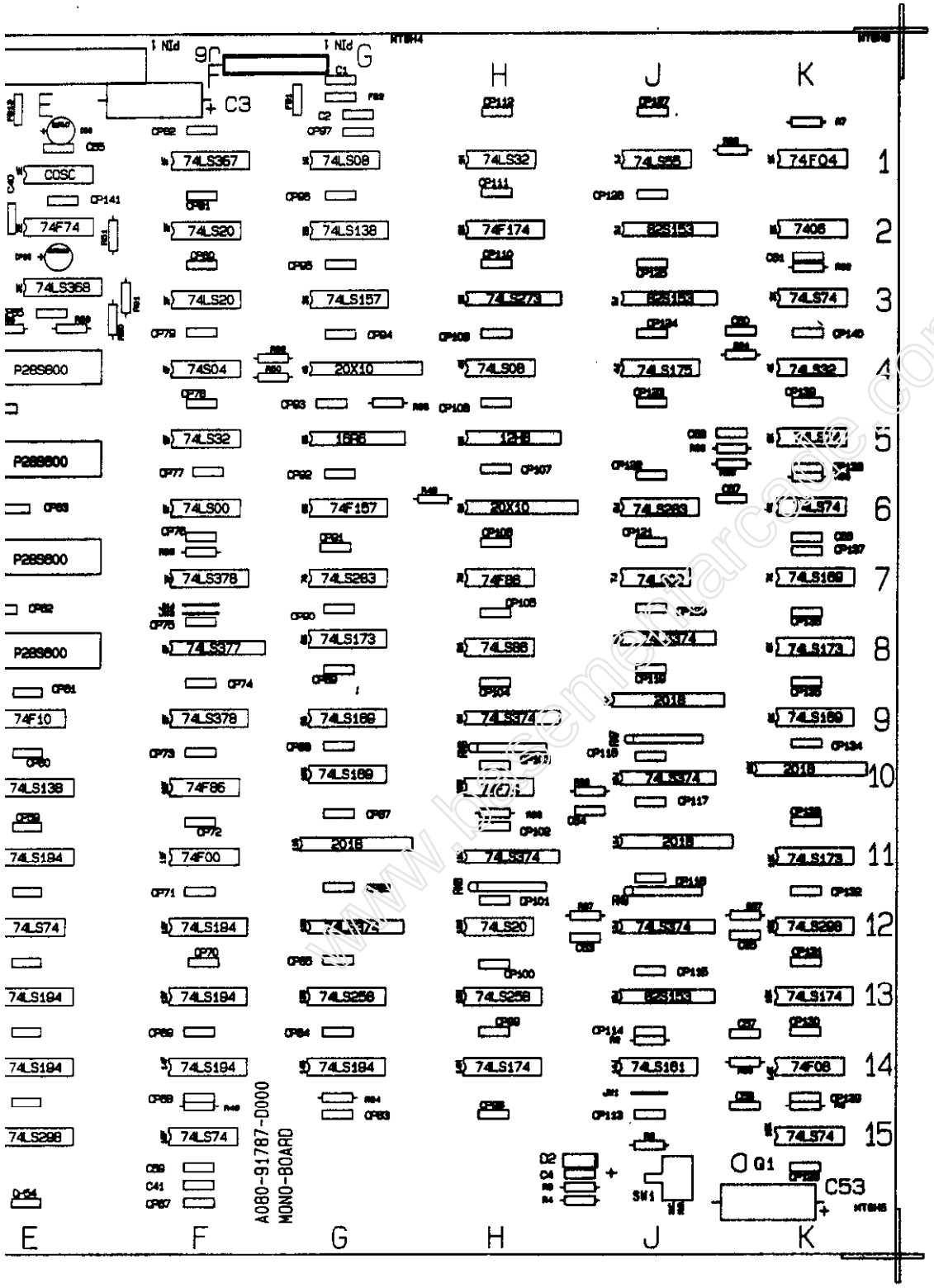

ASSY. DWG. M051-00114-E128

DWG REL FOR PRODUCTION.	
REVISIONS	

PROJECT ENG:		USED ON	BALLY/MIDWAY MFG.CO. FRANKLIN PARK ILL.
DO NOT SCALE DWG.	HEAT TREAT	SCALE	NO.REQD
DRN. JS	MATL.	NON-SCROLL MONO BD.	PART NO. A084-91787-E000
CKD.	FINISH		
DATE 07/24/86			

www.hasemanarcade.com

MONOBOARD
A084-91787-E000
M051-00114-E156

ROSS REFERENCE LIST: Page 1 of 9 Rev. 2

DESCRIPTION	QTY	DESIGNATION NO.	PART NO.
8 PF AX. CER.	4	C60,C62,C67,C68	0A15-00800-C011
3 PF AX. CER.	2	C5,C65	0986-00800-0300
7 PF AX. CER.	6	C47-C52	0986-00800-2800
8 PF AX. CER.	3	C57,C63,C64	0360-00800-C028
70 PF AX. CER.	2	C69,C70	0A15-00800-0013
90 PF AX. CER.	5	C1,C2,C41,C42,C55	0986-00800-3000
20 PF AX. CER.	4	C43-C46	0945-00816-0400
01 UF AX. CER.	146	CP1-CP65,C67-C142 C40,C58,C59,C61,C66	0986-00800-2000
1 UF AX. CER.	33	C6-C38	0986-00800-1100
0 UF 25V AX. TANT.	2	C4,C39	0986-00800-0700
7 UF 25V RD TANT	1	C56	0A59-00800-0001
00 UF 16V RD TANT	1	CP66	0945-00811-0500
70 UF 16V AX. ELEC.	3	C3,C53,C54	0986-00800-2700
0 OHM 1/4W 5% CRBN.	6	R58,R59,R61,R62,R64, R65	100E-00005-0011
2 OHM 1/4W 5% CRBN.	1	R48	100E-00005-0016
7 OHM 1/4W 5% CRBN.	4	R88-R90,R93	100E-00005-0025
3 OHM 1/4W 5% CRBN.	4	R50,R51,R91,R92	100E-00005-0029
2 OHM 1/4W 5% CRBN.	7	R9,R80,R87,R96,R97, R100,R101	100E-00005-0031
20 OHM 1/4W 5% CRBN.	32	R14-R45	100E-00005-0041
70 OHM 1/4W 5% CRBN.	3	R60,R63,R66	100E-00005-0051
10 OHM 1/4W 5% CRBN.	3	R69,R72,R76	100E-00005-0053
50 OHM 1/4W 5% CRBN.	3	R57,R77,R78	100E-00005-0054
30 OHM 1/4W 5% CRBN.	4	R94,R95,R98,R99	100E-00005-0056
< OHM 1/4W 5% CRBN.	5	R68,R71,R73,R75,R86	100E-00005-0061
< OHM 1/4W 5% CRBN.	3	R67,R70,R74	100E-00005-0068
.7K OHM 1/4W 5% CRBN.	2	R46,R47	100E-00005-0071
.7K OHM 1/4W 5% CRBN.	20	R1,R2,R5-R7,R10-R13, R49,R52-R56,R79, R81-84	100E-00005-0079
0K OHM 1/4W 5% CRBN.	2	R3,R4	100E-00005-0088
2K OHM 1/4W 5% CRBN.	1	R8	100E-00005-0112
< OHM 9 PIN SIP	4	RM6-RM9	102E-00004-0011
.7K OHM 10 PIN SIP	4	RM1-RM4	102E-00004-0020
.7K OHM 10 PIN SIP	1	RM5	102E-00004-0026
4148 DIODE	2	D1,D2	103E-00002-0005
4123 NPN XSTR.	2	Q1,Q4	104E-00001-0007
4403 PNP XSTR.	1	Q2	104E-00002-0006
SA70 PNP XSTR	6	Q5-Q10	104E-00002-0012
P110 NPN XSTR.	1	Q3	104E-00009-0001
) MHZ OSC.	1	IC 1E	0304-00804-0007
06	1	IC 2K	0986-00803-7600
ALS20	1	IC 6D	0A59-00803-0015

MONOBOARD
A084-91787-E000
M051-00114-E156

CROSS REFERENCE LIST: Page 2 of 9 Rev. 2

DESCRIPTION	QTY	DESIGNATION
74F00	1	IC 11F
74F04	1	1K
74F08	1	IC 14K
74F10	1	IC 9E
74F74	2	IC 2E,1[illegible]
74F86	2	IC 10F,7[illegible]
74F157	4	IC 5C,6[illegible],8[illegible],6
74F174	1	IC 2H
74LS00	2	IC 14A,6[illegible]
74LS02	1	IC 7J
74LS08	2	IC 1G,4[illegible]
74LS20	3	IC 2F,3[illegible],12[illegible]
74LS32	4	IC 5F,1[illegible],4[illegible],1
74LS55	1	IC 1J
74LS74	6	IC 12E,1[illegible],3[illegible] 15K
74LS86	2	IC 13C,8[illegible]
74LS138	2	IC 10E,2[illegible]
74LS153	2	IC 14C,15[illegible]
74LS157	6	IC 5A,3[illegible],7[illegible],7
74LS158	2	IC 9D,14[illegible]
74LS161	1	IC 14J
74LS163	3	IC 3D-5[illegible]
74LS169	4	IC 9G,10[illegible],7[illegible]
74LS173	3	IC 8G,8[illegible],11[illegible]
74LS174	5	IC 8D,10[illegible],12[illegible]
74LS175	1	IC 4J
74LS194	8	IC 13D,11[illegible],1[illegible] 12F-14F,2[illegible]
74LS244	8	IC 8A-12A,4[illegible]
74LS245	3	IC 1B,8[illegible],10[illegible]
74LS258	2	IC 13G,1[illegible]
74LS273	5	IC 6A,7[illegible],15[illegible],
74LS283	2	IC 7G,6[illegible]
74LS298	2	IC 15E,12[illegible]
74LS367	1	IC 1F
74LS368	1	IC 3E
74LS374	6	IC 12G,9[illegible],11[illegible] 12J
74LS377	3	IC 8F,12[illegible],1[illegible]
74LS378	2	IC 7F,9[illegible]
74S04	2	IC 1D,4[illegible]
MMC01A HAL	1	IC 4G
MMC02B HAL	1	IC 6H
MMC03B HAL	1	IC 5G
MMC06 HAL	1	IC 5H
PACNS REV 1.0 PLA	1	IC 2J

www.basementarcade.com

00
56

2

TION NO.	PART NO.
	0A59-0C803-0001
	0A59-0C803-0C34
	0A59-0C803-0030
	0A59-0C803-0C02
	0A59-0C803-0003
	0A59-0C803-0C31
8C,6G	0A59-0C803-0004
	0A59-0C803-0C05
	0304-0C803-0010
	0986-0C803-7400
	0986-0C803-7300
12H	0986-0C803-1C04
4K,1A	0986-0C803-6100
	0A59-0C803-0C26
F,3K,5K,6K,	0986-0C803-1005
	0986-0C803-9900
	0986-0C803-6500
D	0A59-0C803-0006
7C,7D,11D,3G	0304-0C803-0C21
	0A59-00803-0007
	0986-00803-1003
	0A59-00803-0008
,7K,9K	0304-00803-0023
11K	0A59-00803-0009
,12D,14H,13K	0304-00803-0024
	0304-00803-0025
E,13E,14E,	0304-00803-0026
F,14G	
,4C,11C,2D	0986-00803-4800
10B	0986-00803-6400
H	0304-00803-0028
15B,15C,3H	0986-00803-4700
	0304-0C803-0030
K	0A59-0C803-0010
	0986-00803-7000
	0A59-00803-0011
,11H,8J,10J,	0986-0C803-4600
,13B	0A59-00803-0012
	CA59-00803-0013
	0986-00803-6600
	0986-00803-8900
	0986-00803-9000
	0986-00803-9100
	0986-00803-9200
	A59A-26AAJ-BXHD

MONOBOARD
A084-91787-E000
M051-00114-E156

CROSS REFERENCE LIST: Page 3 of 9 Rev. 2

DESCRIPTION	QTY	DESIGNATION NO.	PART NO.
PACOUT REV 1.0 PLA	1	IC 3J	A59A-26AAJ-AXHD
ROMCTRL REV 1.0 PLA	1	IC 13J	A59A-26AAJ-CXHD
2018 2Kx8 RAM 45NS	4	IC 11G,10K,9J,11J	0A59-00803-0028
2018 2Kx8 RAM 55NS	1	IC 10C	0A59-00803-0029
6116 2Kx8 RAM 120NS	1	IC 11B	0A59-00803-0027
6116 2Kx8 RAM 150NS	2	IC 6B,9B	0A59-00803-0014
93419 64x9 RAM	1	IC 4A	0986-00803-9600
Z80B	1	IC 1C	0304-00803-0041
Z80B CTC	1	IC 2C	0304-00803-0040
BG0 64K ROM/EPROM	1	IC 15A	SEE ROM/EPROM CHART
BG1 64K ROM/EPROM	1	IC 14B	SEE ROM/EPROM CHART
FG0 256K ROM/EPROM	1	IC 8E	SEE ROM/EPROM CHART
FG1 256K ROM/EPROM	1	IC 6E	SEE ROM/EPROM CHART
FG2 256K ROM/EPROM	1	IC 5E	SEE ROM/EPROM CHART
FG3 256K ROM/EPROM	1	IC 4E	SEE ROM/EPROM CHART
PROG0 256K ROM/EPROM	1	IC 3B	SEE ROM/EPROM CHART
PROG1 256K ROM/EPROM	1	IC 5B	SEE ROM/EPROM CHART
16 PIN IC SOCKET(.300)	1	ICS 3E	110E-00001-0003
20 PIN IC SOCKET(.300)	5	ICS 5G,5H,2J,3J,13J	110E-00001-0005
24 PIN IC SOCKET(.300)	7	ICS 10C,4G,11G,6H,9J 11J,10K	110E-00001-0009
24 PIN IC SOCKET(.600)	3	ICS 6B,9B,11B	110E-00001-0007
28 PIN IC SOCKET(.600)	10	ICS 4A,15A,3B,5B,14B, 2C,4E-6E,8E	110E-00001-0010
40 PIN IC SOCKET(.600)	1	ICS 1C	110E-00001-0011
AUTO INSERT PIN TIN .025 SQ	18	J2	0304-00804-0009
AUTO INSERT PIN TIN .025 SQ	22	J3	0304-00804-0009
AUTO INSERT PIN TIN .025 SQ	15	J4	0304-00804-0009
AUTO INSERT PIN TIN .025 SQ	8	J5	0304-00804-0009
AUTO INSERT PIN TIN .025 SQ	10	J6	0304-00804-0009
AUTO INSERT PIN TIN .045 SQ	11	J1	0304-00804-0010
FERRITE BEAD	13	FB1-FB13	0316-00804-0002
ZERO OHM RESISTOR (JUMPER)	7	JW1-JW6,R85	117E-00001-0003

www.basementarcade.com

MONOBOARD
A084-91787-E000
M051-00114-E156

ROSS REFERENCE LIST: Page 4 of 9 Rev. 2

DESCRIPTION	QTY	DESIGNATION NO.	PART NO.
SWITCH PC. MTG.	1	SW1	0986-00804-3100
10 POS. DIP SWITCH	1	SW2	113E-00001-0004
SNAP	1	MHQ3	0017-00007-0134
PC BOARD	1		A080-91787-E000

Released 23 July 86 CMM
Rev. 1 - 28 July 86 CMM - Changed R85 to zero ohm.
Rev. 2 - 31 July 86 CMM - Removed eprom part #'s.

MONOBOARD
A084-91787-E000
M051-00114-E156

DESIGNATION LIST: Page 5 of 9 Re

DESCRIPTION	DESIGNATION
CP1-CP65	.01 UF AX. CER.
CP66	100 UF 16V RD.
CP67-CP142	.01UF AX. CER.
C1,C2	390 PF AX. CER.
C3	470 UF 16V AX.
C4	10 UF 25V AX. T
C5	33 PF AX. CER.
C6-C38	.1 UF AX. CER.
C39	10 UF 25V AX. T
C40	.01 UF AX. CER
C41,C42	390 PF AX. CER.
C43-C46	820 PF AX. CER.
C47-C52	47 PF AX. CER.
C53,C54	470 UF 16V AX.
C55	390 PF AX. CER.
C56	47 UF 25V RD. T
C57	68 PF AX. CER.
C58,C59	.01 UF AX. CER
C60	18 PF AX. CER.
C61	.01 UF AX. CER
C62	18 PF AX. CER.
C63	68 PF AX. CER.
C64	68 PF AX. CER.
C65	33 PF AX. CER.
C66	.01 UF AX. CER
C67	18 PF AX. CER.
C68	18 PF AX. CER.
C69	270 PF AX. CER
C70	270 PF AX. CER
R1,R2	4.7K OHM 1/4W 5
R3,R4	10K OHM 1/4W 5
R5-R7	4.7K OHM 1/4W 5
R8	82K OHM 1/4W 5
R9	82 OHM 1/4W 5%
R10-R13	4.7K OHM 1/4W 5
R14-R45	220 OHM 1/4W 5
R46,R47	2.7K OHM 1/4W 5
R48	22 OHM 1/4W 5%
R49,R52-R56	4.7K 1/4W 5% C
R50,R51	68 OHM 1/4W 5%
R57	560 OHM 1/4W 5
R58,R59	10 OHM 1/4W 5%
R60	470 OHM 1/4W 5
R61,R62	10 OHM 1/4W 5%
R63	470 OHM 1/4W 5
R64,R65	10 OHM 1/4W 5%
R66	470 OHM 1/4W 5
R67	2K OHM 1/4W 5%
R68	1K OHM 1/4W 5%
R69	510 OHM 1/4W 5
R70	2K OHM 1/4W 5%

www.basementarcade.com

MONOBOARD
A084-91787-E000
M051-00114-E156

DESCRIPTION	DESIGNATION NO.
R71	1K OHM 1/4W 5% CRBN.
R72	510 OHM 1/4W 5% CRBN.
R73	1K OHM 1/4W 5% CRBN.
R74	2K OHM 1/4W 5% CRBN.
R75	1K OHM 1/4W 5% CRBN.
R76	510 OHM 1/4W 5% CRBN.
R77,R78	560 OHM 1/4W 5% CRBN.
R79	4.7K OHM 1/4W 5% CRBN.
R80	82 OHM 1/4W 5% CRBN.
R81-R84	4.7K OHM 1/4W 5% CRBN.
R85	ZERO OHM (Jumper)
R86	1K OHM 1/4W 5% CRBN.
R87	82 OHM 1/4W 5% CRBN.
R88	47 OHM 1/4W 5% CRBN.
R89	47 OHM 1/4W 5% CRBN.
R90	47 OHM 1/4W 5% CRBN.
R91	68 OHM 1/4W 5% CRBN.
R92	68 OHM 1/4W 5% CRBN.
R93	47 OHM 1/4W 5% CRBN.
R94	680 OHM 1/4W 5% CRBN.
R95	680 OHM 1/4W 5% CRBN.
R96	82 OHM 1/4W 5% CRBN.
R97	82 OHM 1/4W 5% CRBN.
R98	680 OHM 1/4W 5% CRBN.
R99	680 OHM 1/4W 5% CRBN.
R100	82 OHM 1/4W 5% CRBN.
R101	82 OHM 1/4W 5% CRBN.
RM1-RM4	2.7K OHM 10 PIN SIP
RM5	4.7K OHM 10 PIN SIP
RM6-RM9	1K OHM 9 PIN SIP
D1,D2	1N4148 DIODE
Q1	2N4123 XSTR.
Q2	2N4403 XSTR.
Q3	TIP110 XSTR.
Q4	2N4123 XSTR.
Q5-Q10	MPSA70 XSTR.
IC 1A	74LS32
IC 4A	93419 64x9 RAM
IC 5A	74LS157
IC 6A,7A	74LS273
IC 8A-12A	74LS244
IC 14A	74LS00
IC 15A	BGO 64K ROM/EPROM
IC 1B	74LS245
IC 2B	NOT USED
IC 3B,5B	PROG0,PROG1 256K ROM/EPROM
IC 6B	6116 2Kx8 RAM 150 NS.
IC 8B	74LS245
IC 9B	6116 2Kx8 RAM 150 NS.
IC 10B	74LS245

www.basementarcade.com

MONOBOARD
A084-91787-E000
M051-00114-E156

DESIGNATION LIST: Page 7 of 9 Rev. 2

DESCRIPTION	DESIGNATION NO.
IC 11B	6116 2Kx8 RAM 120 NS.
IC 12B,13B	74LS377
IC 14B	BG1 64K ROM/EPROM
IC 15B	74LS273
IC 1C	Z80B CPU
IC 2C	Z80B CTC
IC 3C	74LS157
IC 4C	74LS244
IC 5C,6C	74F157
IC 7C	74LS157
IC 8C	74F157
IC 10C	2018 2Kx8 RAM 55NS
IC 11C	74LS244
IC 13C	74LS86
IC 14C	74LS153
IC 15C	74LS273
IC 1D	74S04
IC 2D	74LS244
IC 3D-5D	74LS163
IC 6D	74ALS20
IC 7D	74LS157
IC 8D	74LS174
IC 9D	74LS158
IC 10D	74LS174
IC 11D	74LS157
IC 12D	74LS174
IC 13D	74LS194
IC 14D	74LS158
IC 15D	74LS153
IC 1E	20 MHZ COSC.
IC 2E	74F74
IC 3E	74LS368
IC 4E-6E,8E	FG3,FG2,FG1,FG0 256K ROM/EPROM
IC 9E	74F10
IC 10E	74LS138
IC 11E	74LS194
IC 12E	74LS74
IC 13E,14E	74LS194
IC 15E	74LS298
IC 1F	74LS367
IC 2F,3F	74LS20
IC 4F	74S04
IC 5F	74LS32
IC 6F	74LS00
IC 7F	74LS378
IC 8F	74LS377
IC 9F	74LS378
IC 10F	74F86
IC 11F	74F00
IC 12F-14F	74LS194
IC 15F	74LS74

MONOBOARD
A084-91787-E000
M051-00114-E156

DESIGNATION LIST: Page 8 of 9 Rev.

DESCRIPTION	DESIGNATION NO.
IC 1G	74LS08
IC 2G	74LS138
IC 3G	74LS157
IC 4G	MMC01A HAL
IC 5G	MMC03B HAL
IC 6G	74F157
IC 7G	74LS283
IC 8G	74LS173
IC 9G,10G	74LS169
IC 11G	2018 2Kx8 RAM [illegible]
IC 12G	74LS374
IC 13G	74LS258
IC 14G	74LS194
IC 1H	74LS32
IC 2H	74F174
IC 3H	74LS273
IC 4H	74LS08
IC 5H	MMC06 HAL
IC 6H	MMC02B HAL
IC 7H	74F86
IC 8H	74LS86
IC 9H	74LS374
IC 10H	74F74
IC 11H	74LS374
IC 12H	74LS20
IC 13H	74LS258
IC 14H	74LS174
IC 1J	74LS55
IC 2J	PACNS REV 1.[illegible]
IC 3J	PACOUT REV 1.[illegible]
IC 4J	74LS175
IC 6J	74LS283
IC 7J	74LS02
IC 8J	74LS374
IC 9J	2018 2Kx8 RAM 45NS
IC 10J	74LS374
IC 11J	2018 2Kx8 RAM [illegible]
IC 12J	74LS374
IC 13J	ROMCNTRL REV [illegible]
IC 14J	74LS161
IC 1K	74F04
IC 2K	7406
IC 3K	74LS74
IC 4K	74LS32
IC 5K,6K	74LS74
IC 7K	74LS169
IC 8K	74LS173
IC 9K	74LS169
IC 10K	2018 2Kx8 RAM [illegible]
IC 11K	74LS173

www.basementarcade.com

MONOBOARD
A084-91787-E000
M051-00114-E156

DESIGNATION LIST: Page 9 of 9 Rev. 2

DESCRIPTION	DESIGNATION NO.
IC 12K	74LS298
IC 13K	74LS174
IC 14K	74F08
IC 15K	74LS74
ICS 4A,15A,3B,5B	28 PIN IC SOCKET (.600)
ICS 6B,9B,11B	24 PIN IC SOCKET (.600)
ICS 14B	28 PIN IC SOCKET (.600)
ICS 1C	40 PIN IC SOCKET (.600)
ICS 2C	28 PIN IC SOCKET (.600)
ICS 10C	24 PIN IC SOCKET (.300)
ICS 3E	16 PIN IC SOCKET (.300)
ICS 4E-6E,8E	28 PIN IC SOCKET (.600)
ICS 4G	24 PIN IC SOCKET (.300)
ICS 5G	20 PIN IC SOCKET (.300)
ICS 11G	24 PIN IC SOCKET (.300)
ICS 5H	20 PIN IC SOCKET (.300)
ICS 6H	24 PIN IC SOCKET (.300)
ICS 2J,3J	20 PIN IC SOCKET (.300)
ICS 9J,11J	24 PIN IC SOCKET (.300)
ICS 13J	20 PIN IC SOCKET (.300)
ICS 10K	24 PIN IC SOCKET (.300)
FB1-FB13	FERRITE BEAD
SW1	SWITCH PC. MTG.
SW2	10 POS. DIP SWITCH
JW1-JW6	JUMPER
J1	AUTO INSERT PINS TIN .045
	SQ. PIN
J2-J6	AUTO INSERT PINS TIN .025
	SQ. PIN
MHQ3	SNAP
PC BOARD	A080-91787-E000

Released 23 July 86 CMM
Rev. 1 - 28 July 86 CMM - Changed R85 to zero ohm.
Rev. 2 - 31 July 86 CMM - Removed eprom part #'s.

www.basementarcade.com

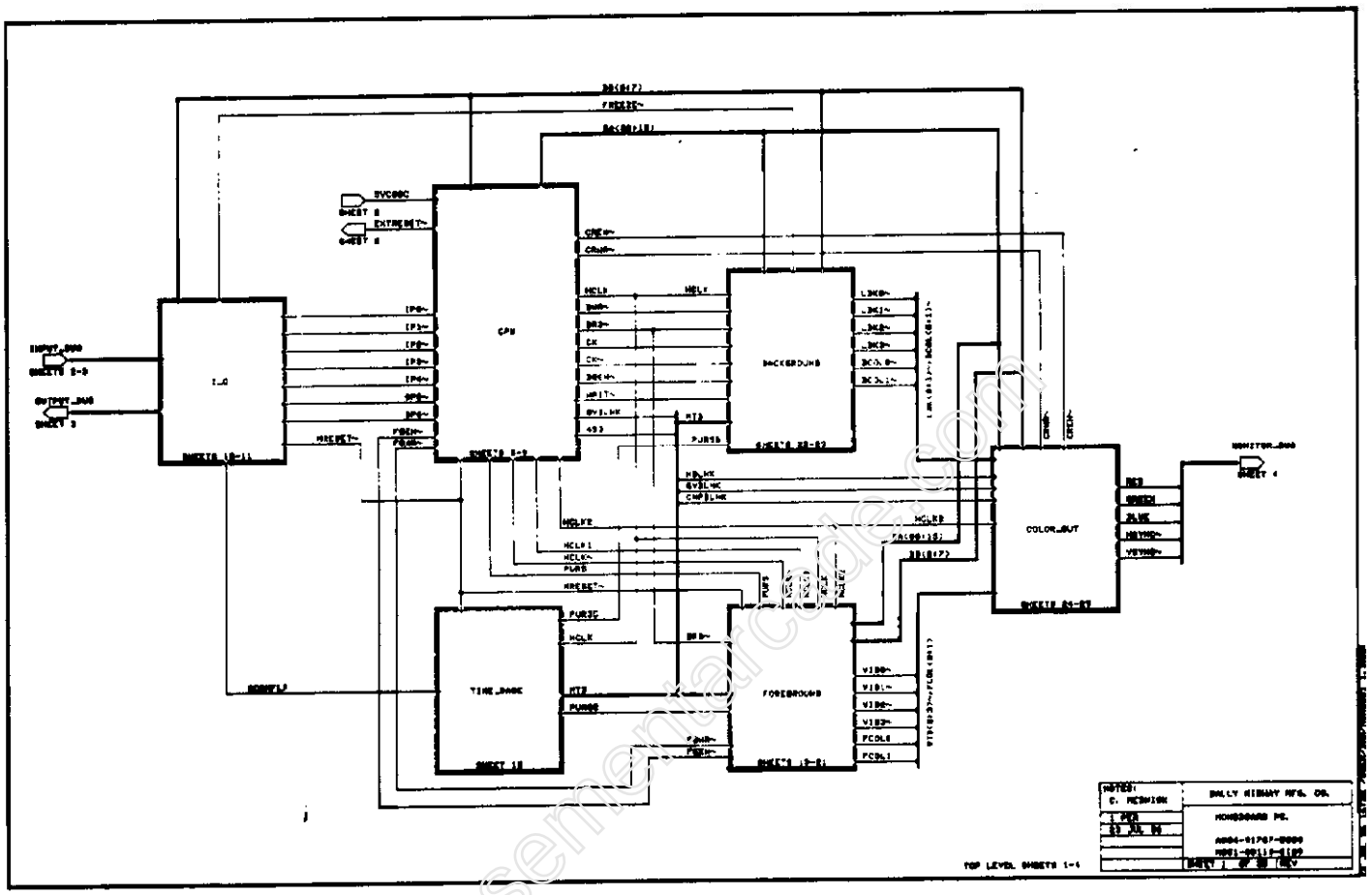

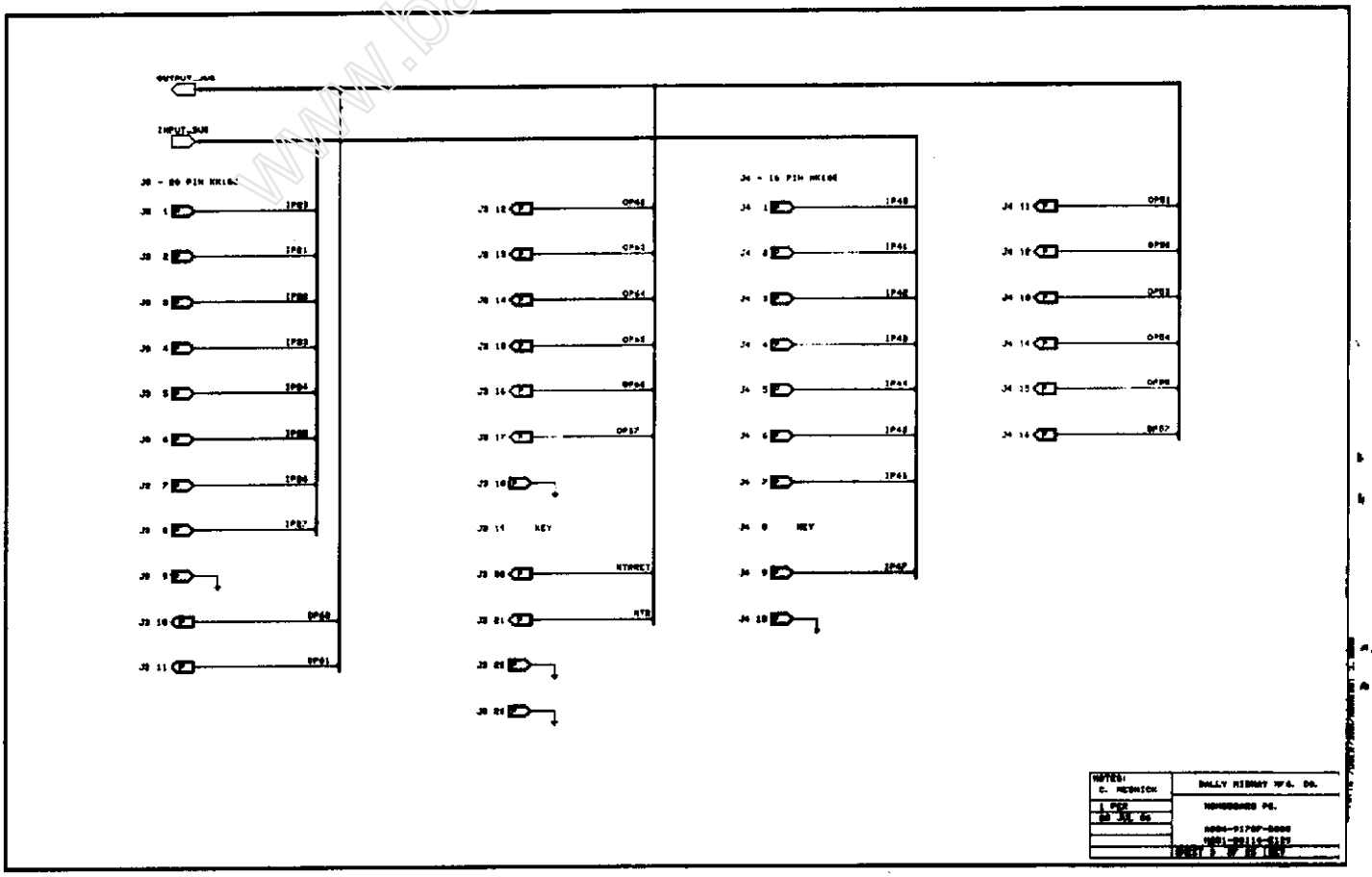

www.basementarcade.com

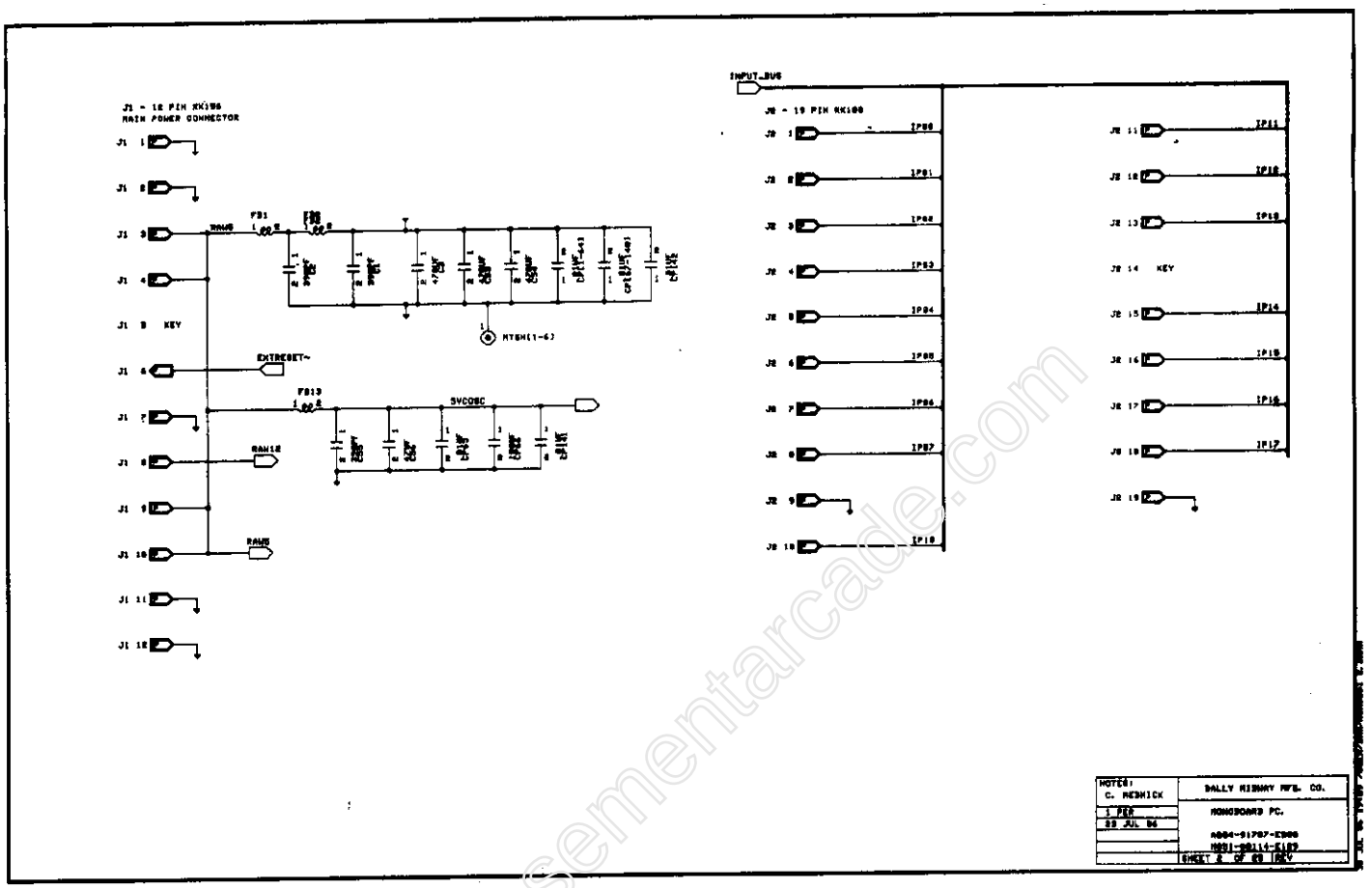

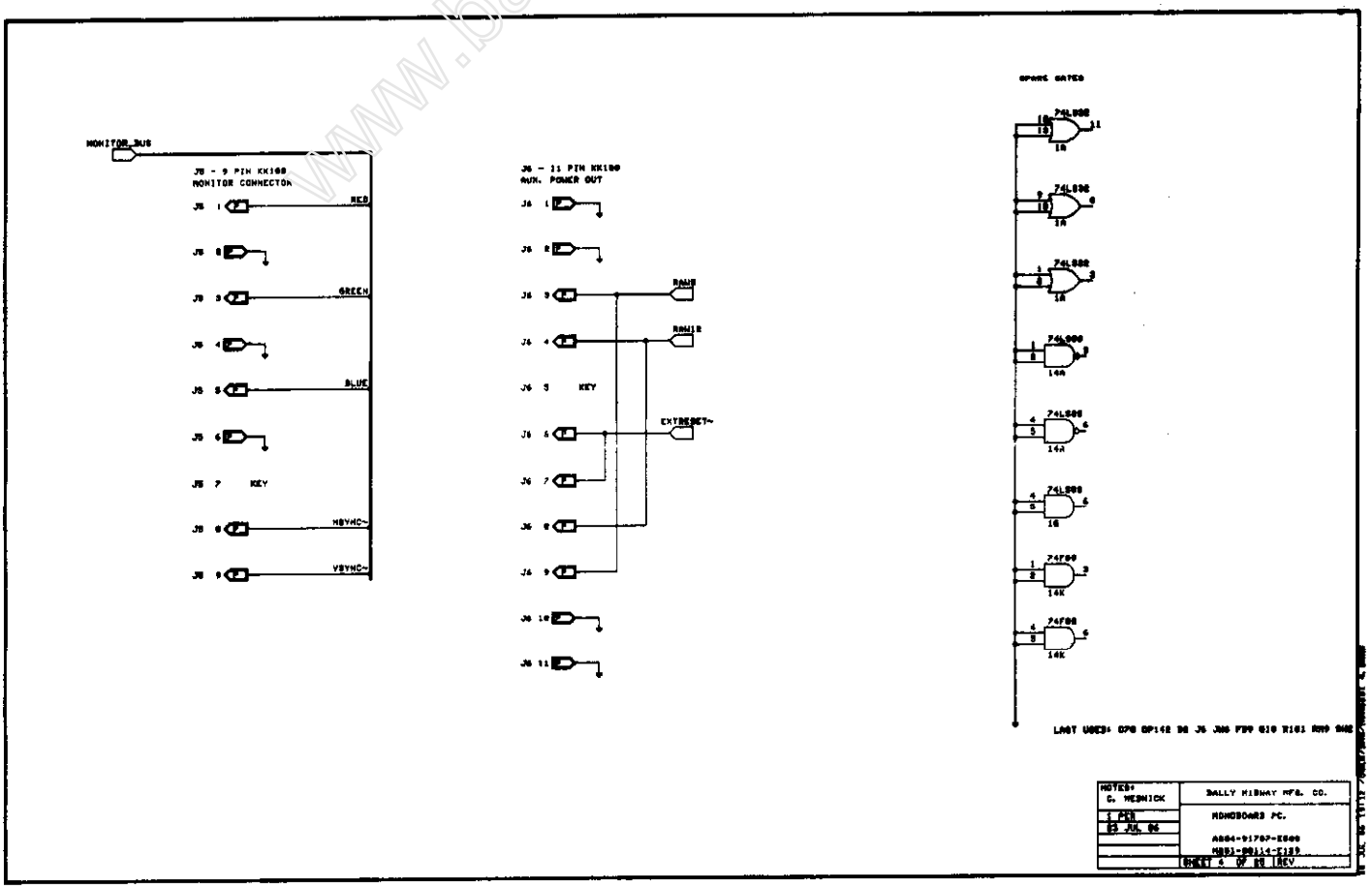

www.basementarcade.com

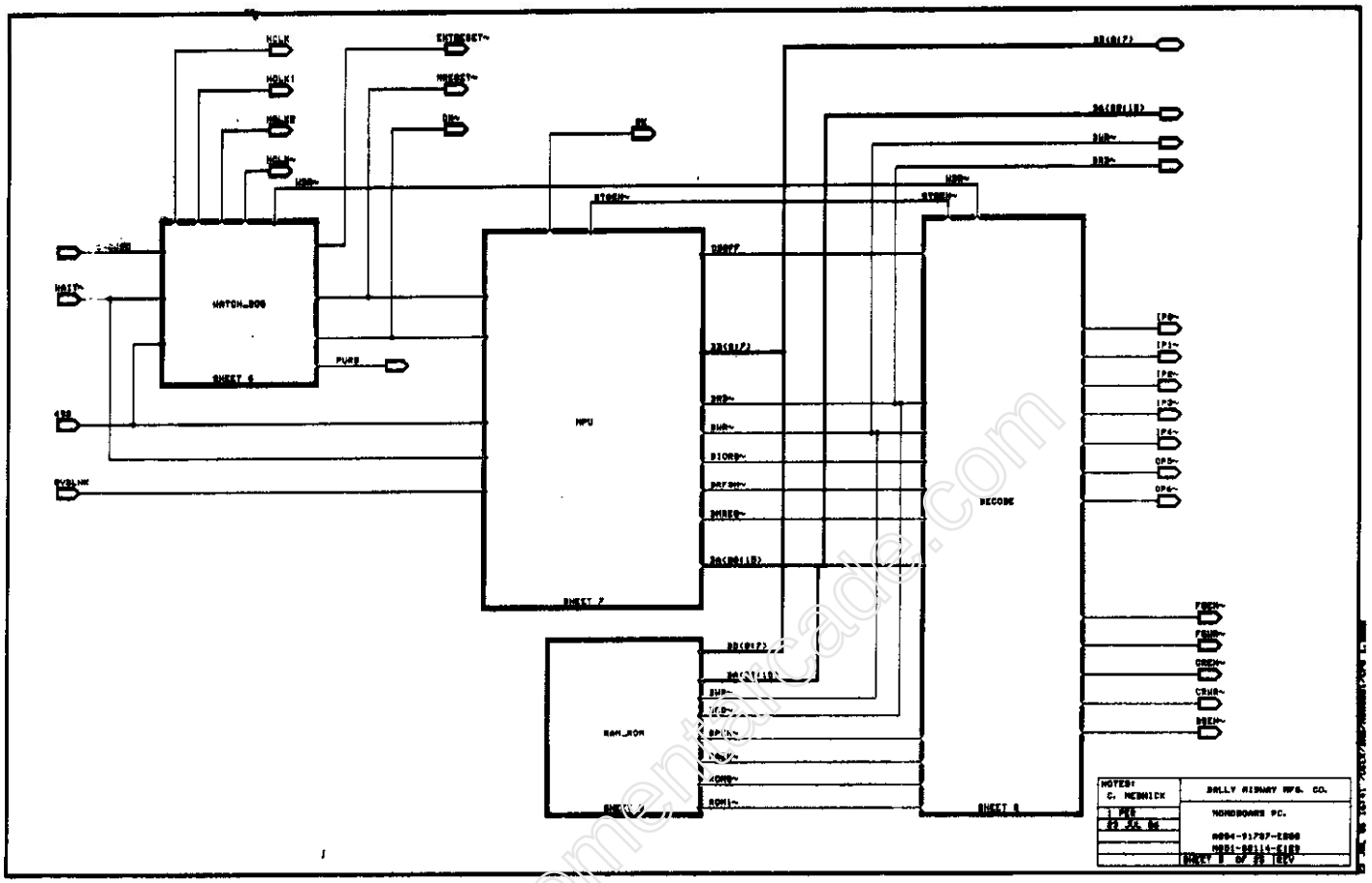

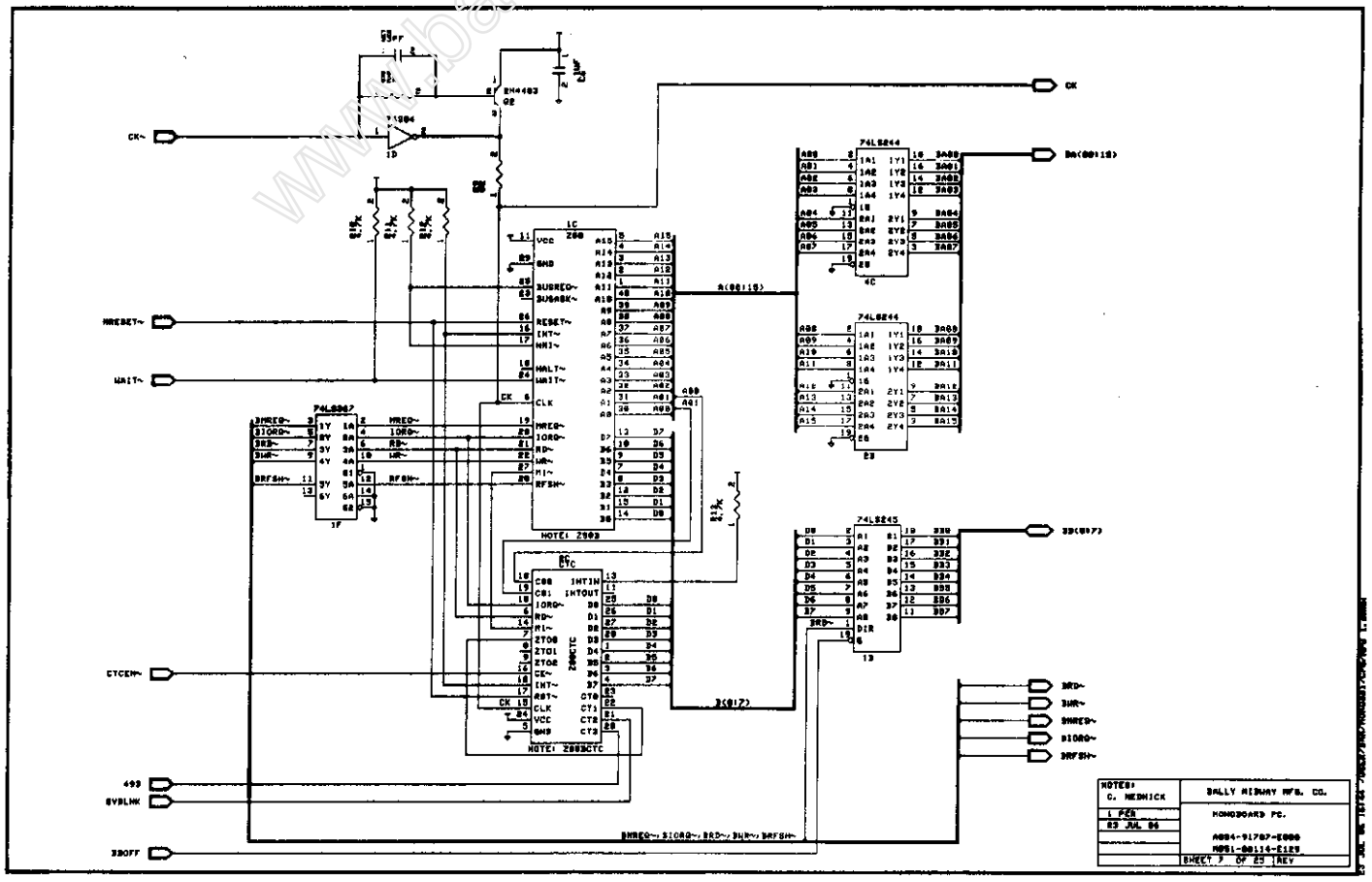

www.basementarcade.com

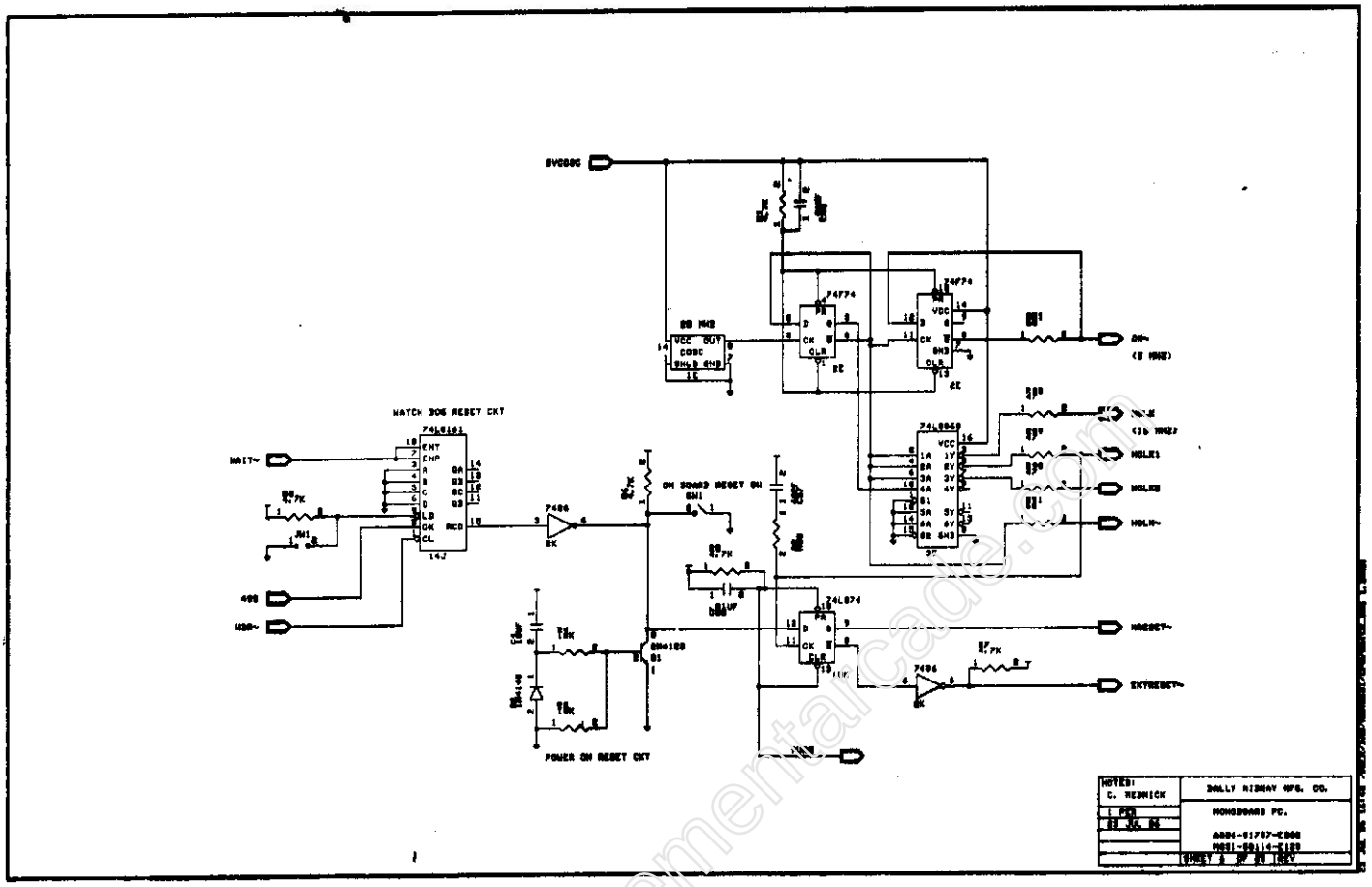

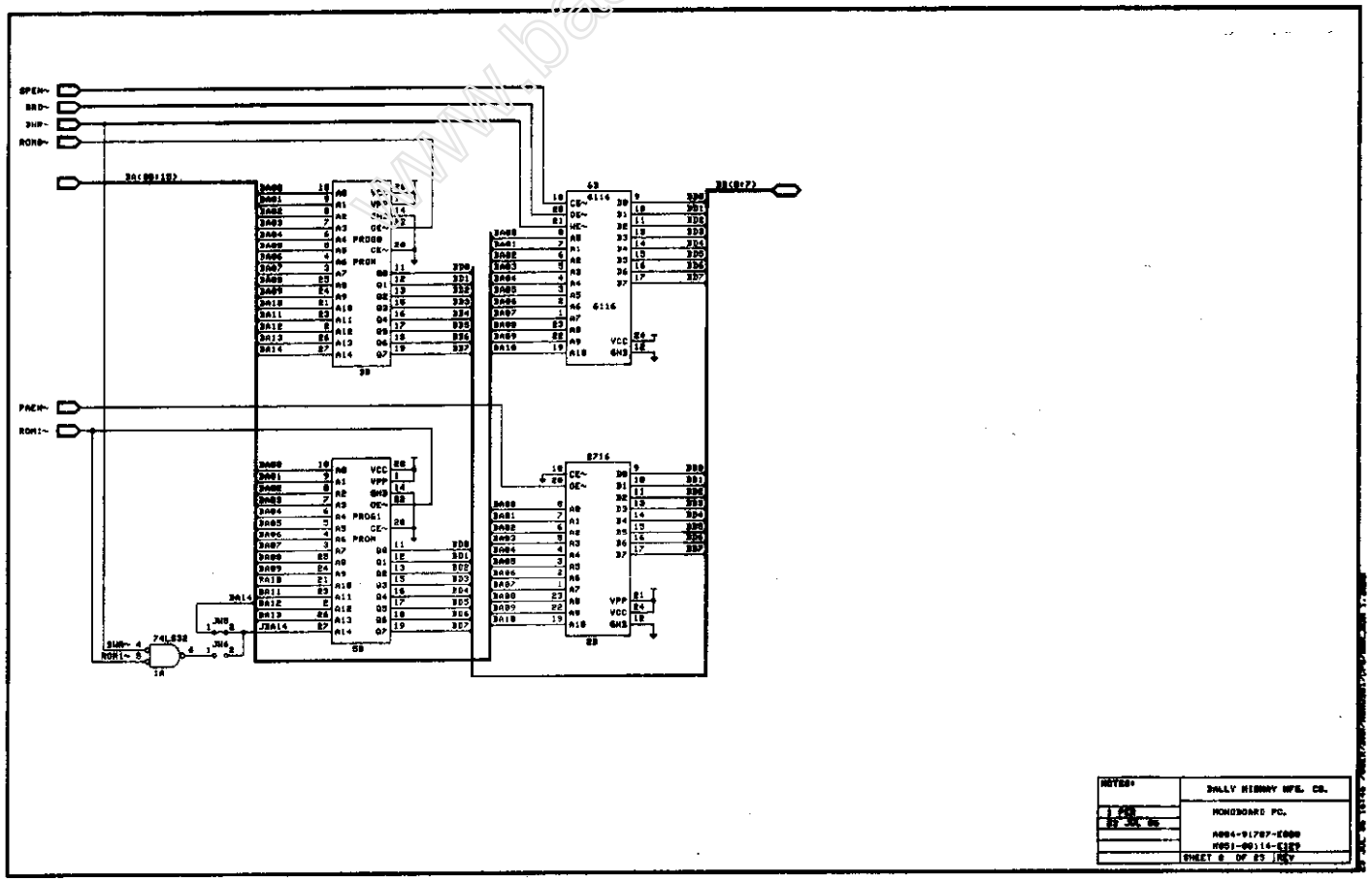

www.basementarcade.com

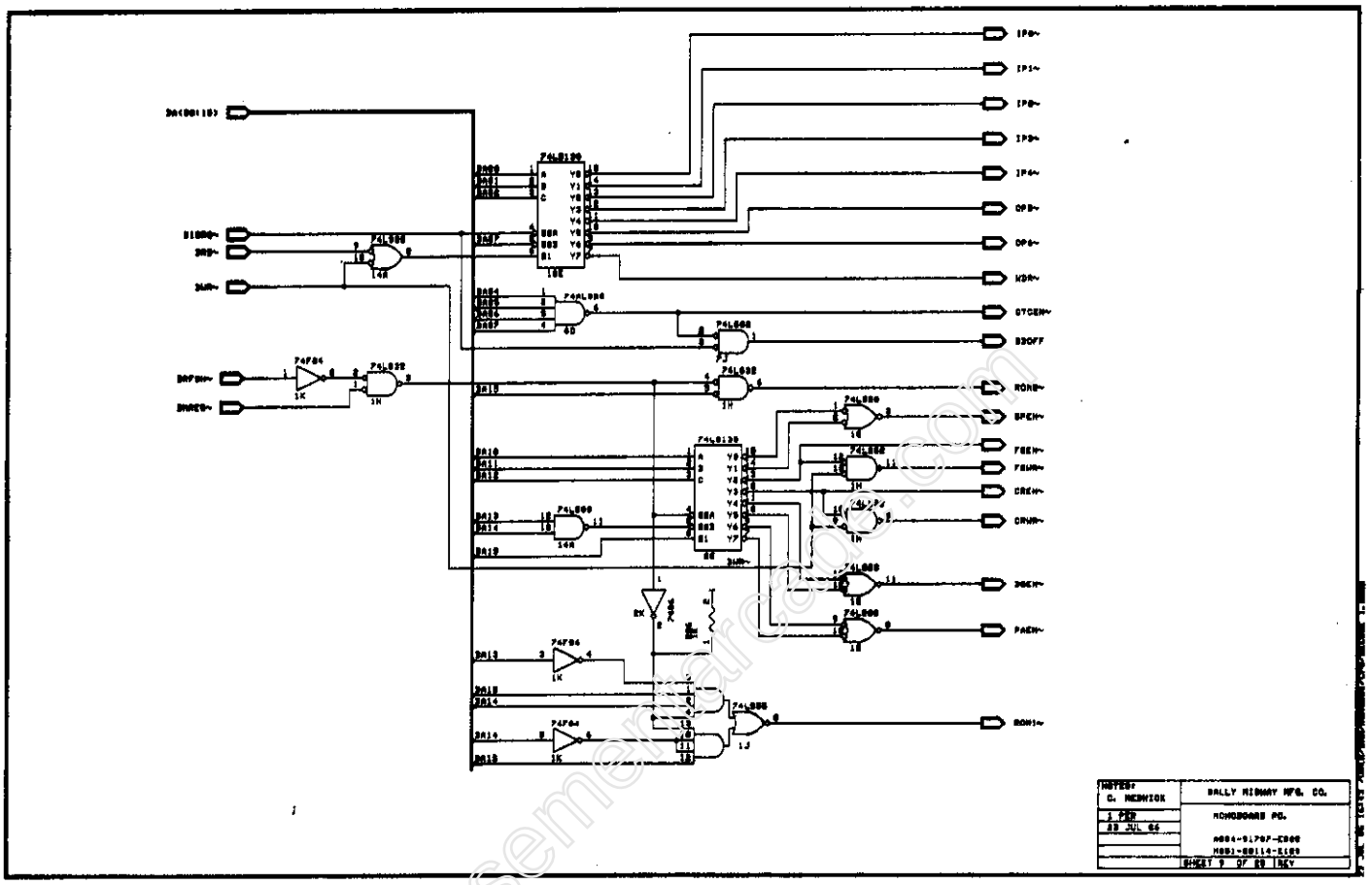

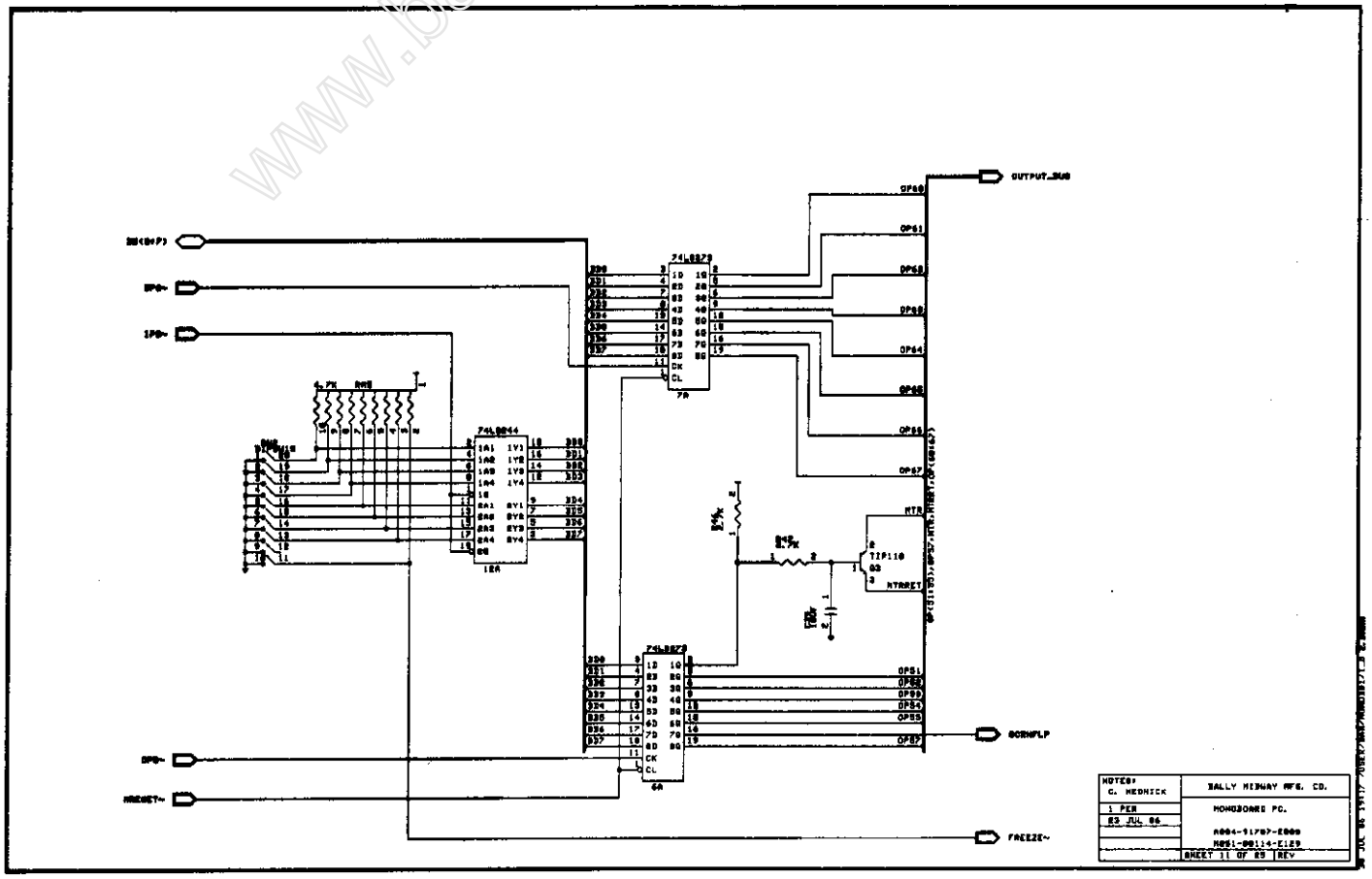

www.basementarcade.com

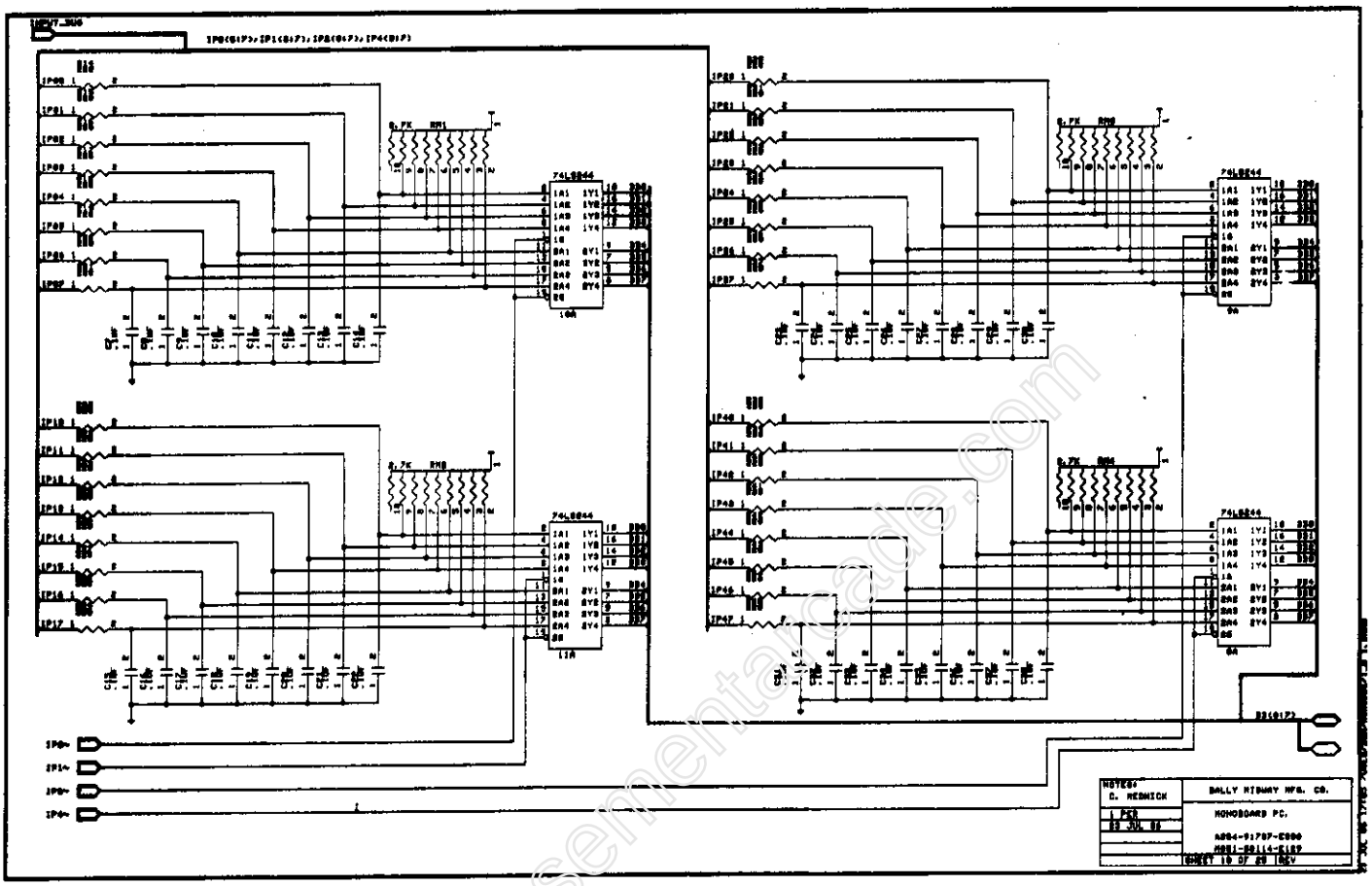

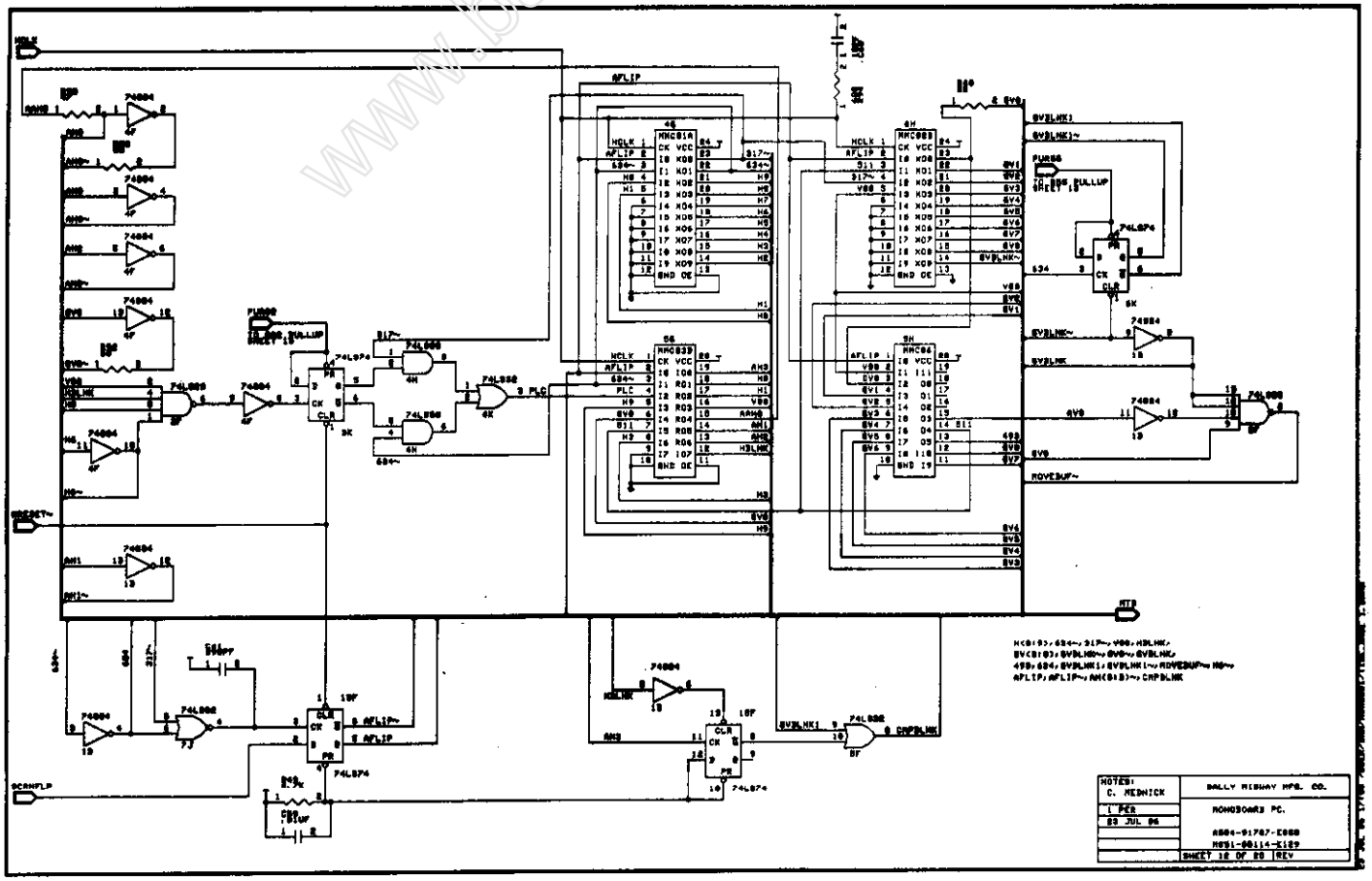

www.basementarcade.com

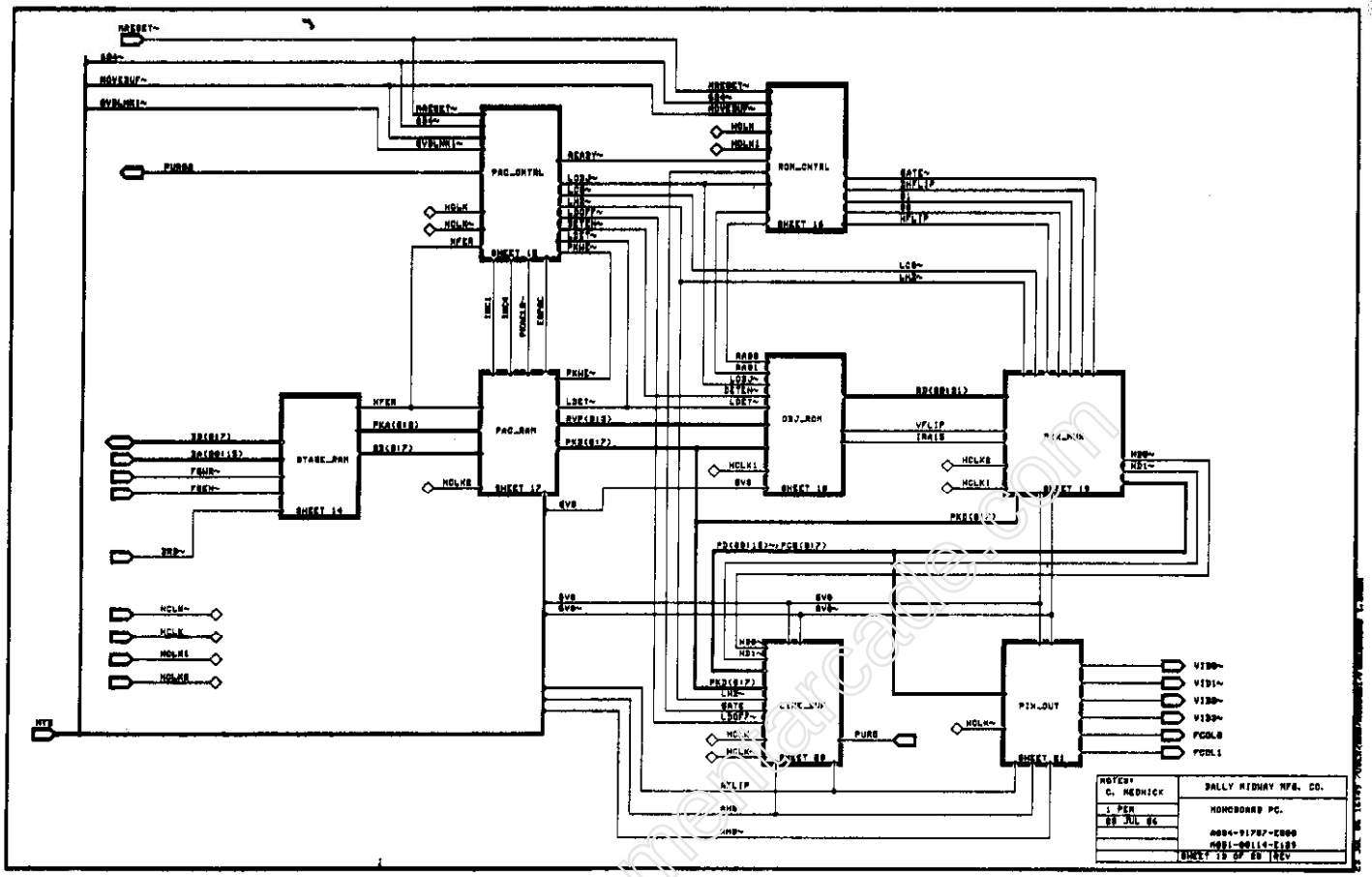

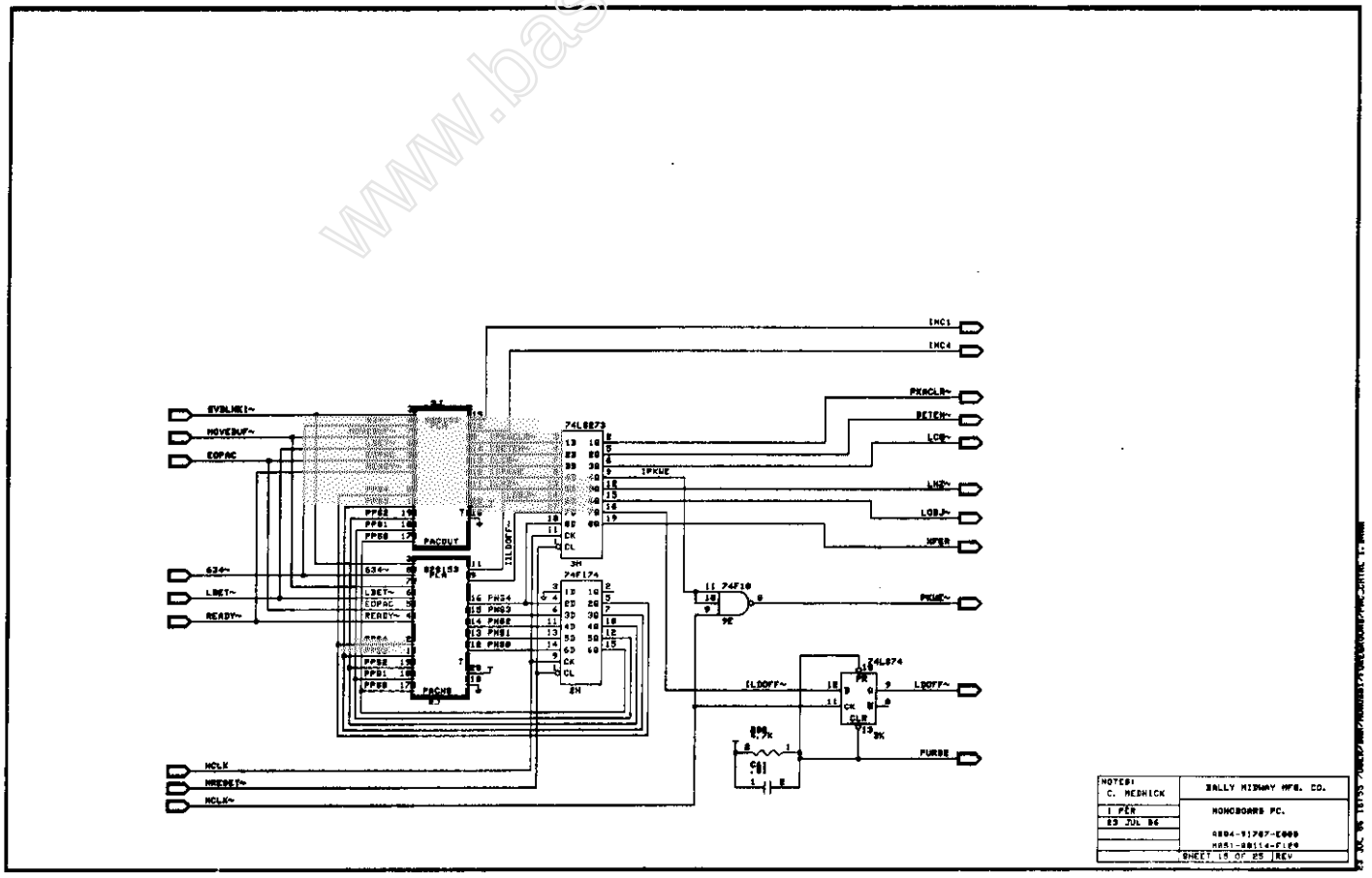

www.basementarcade.com

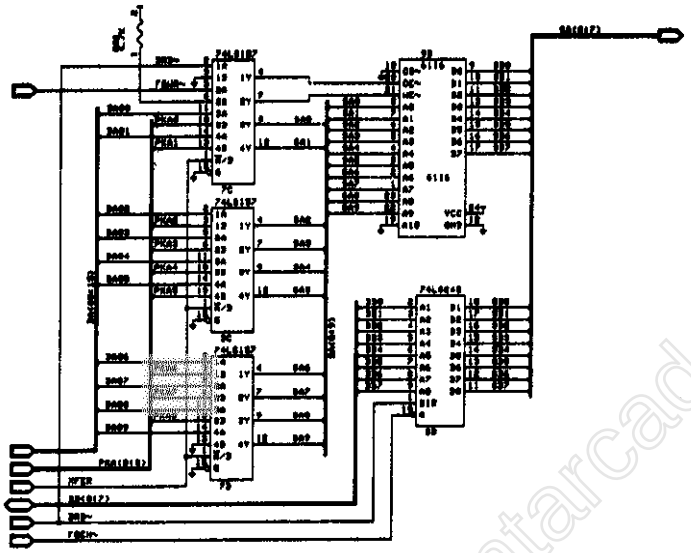

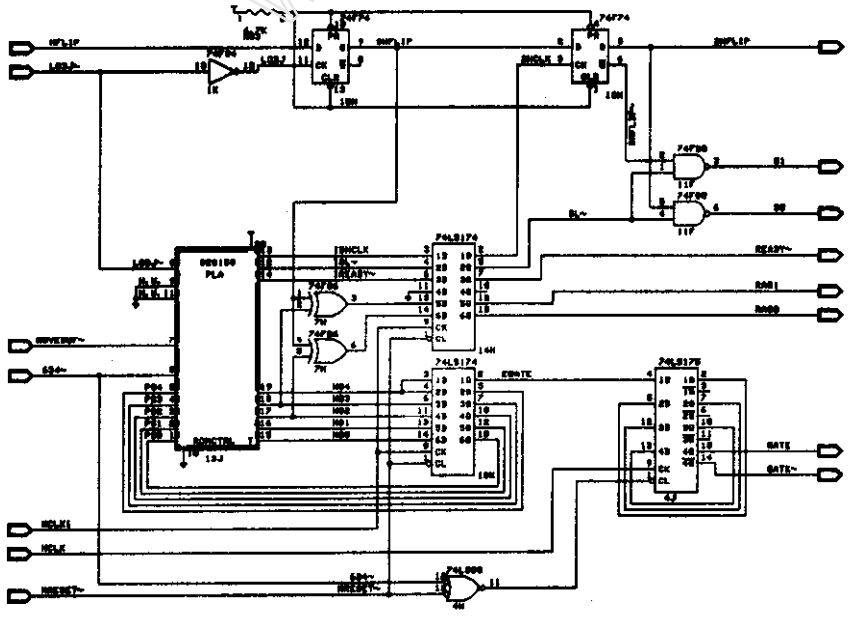

www.basementarcade.com

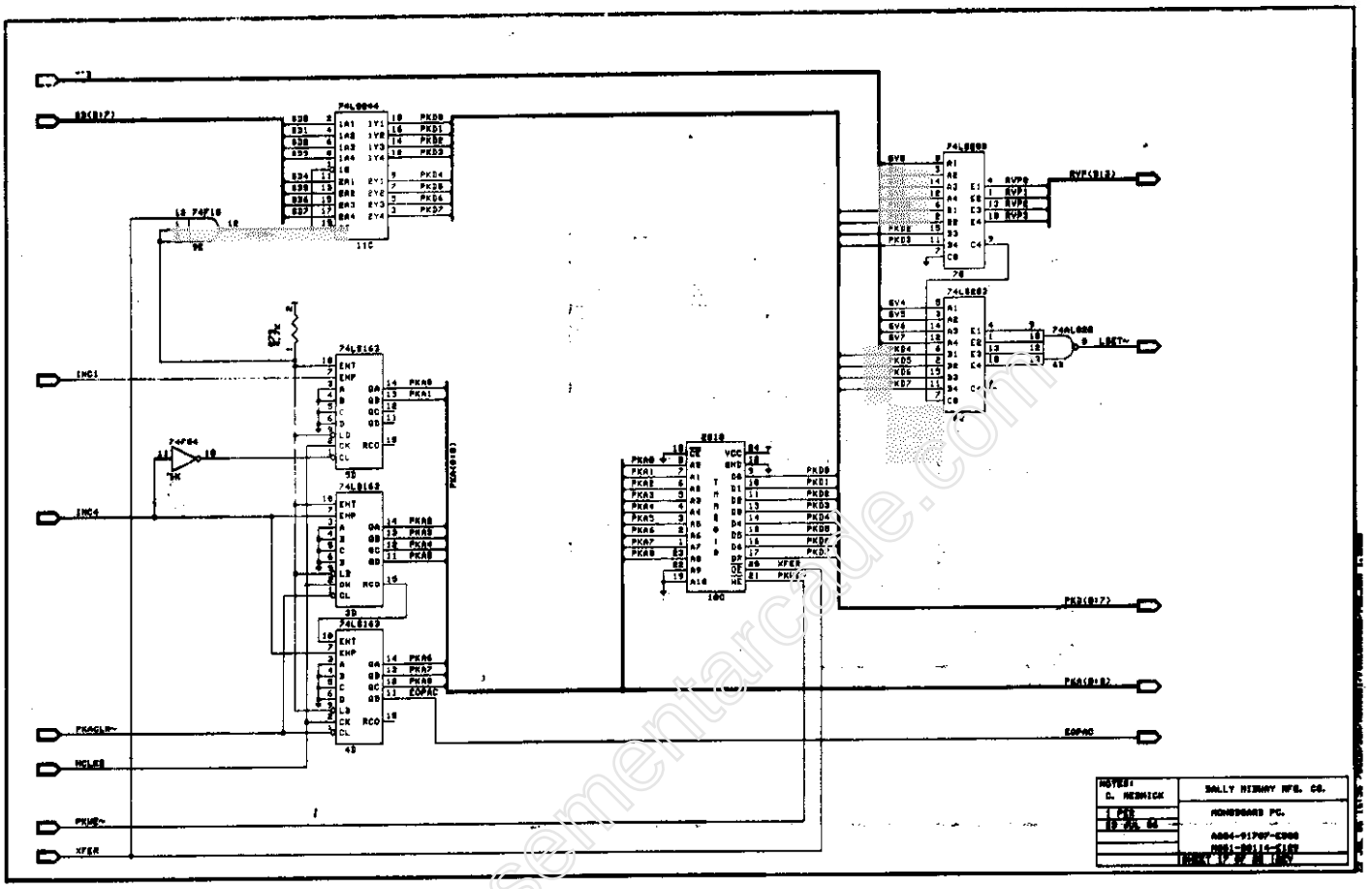

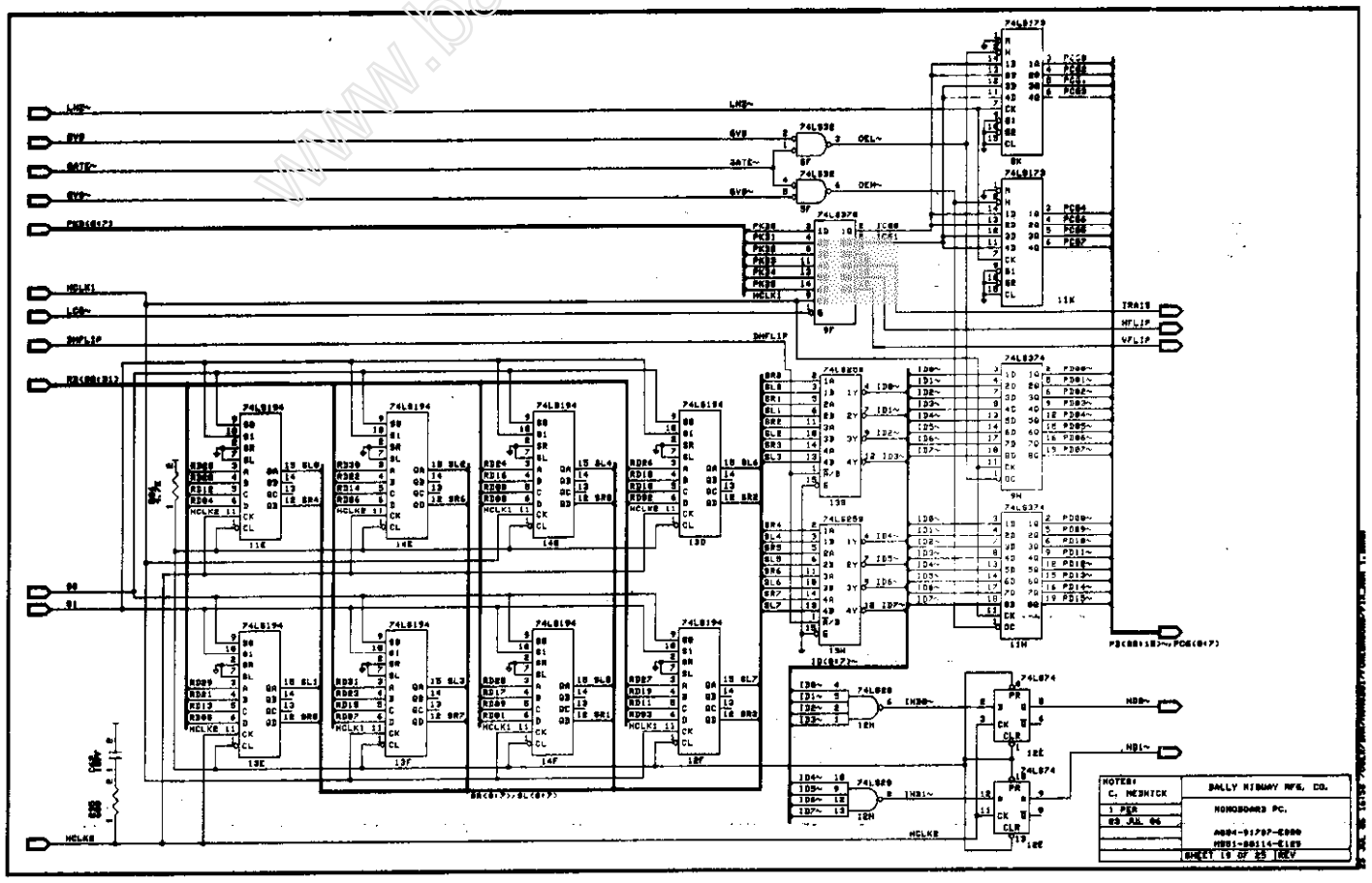

www.basementarcade.com

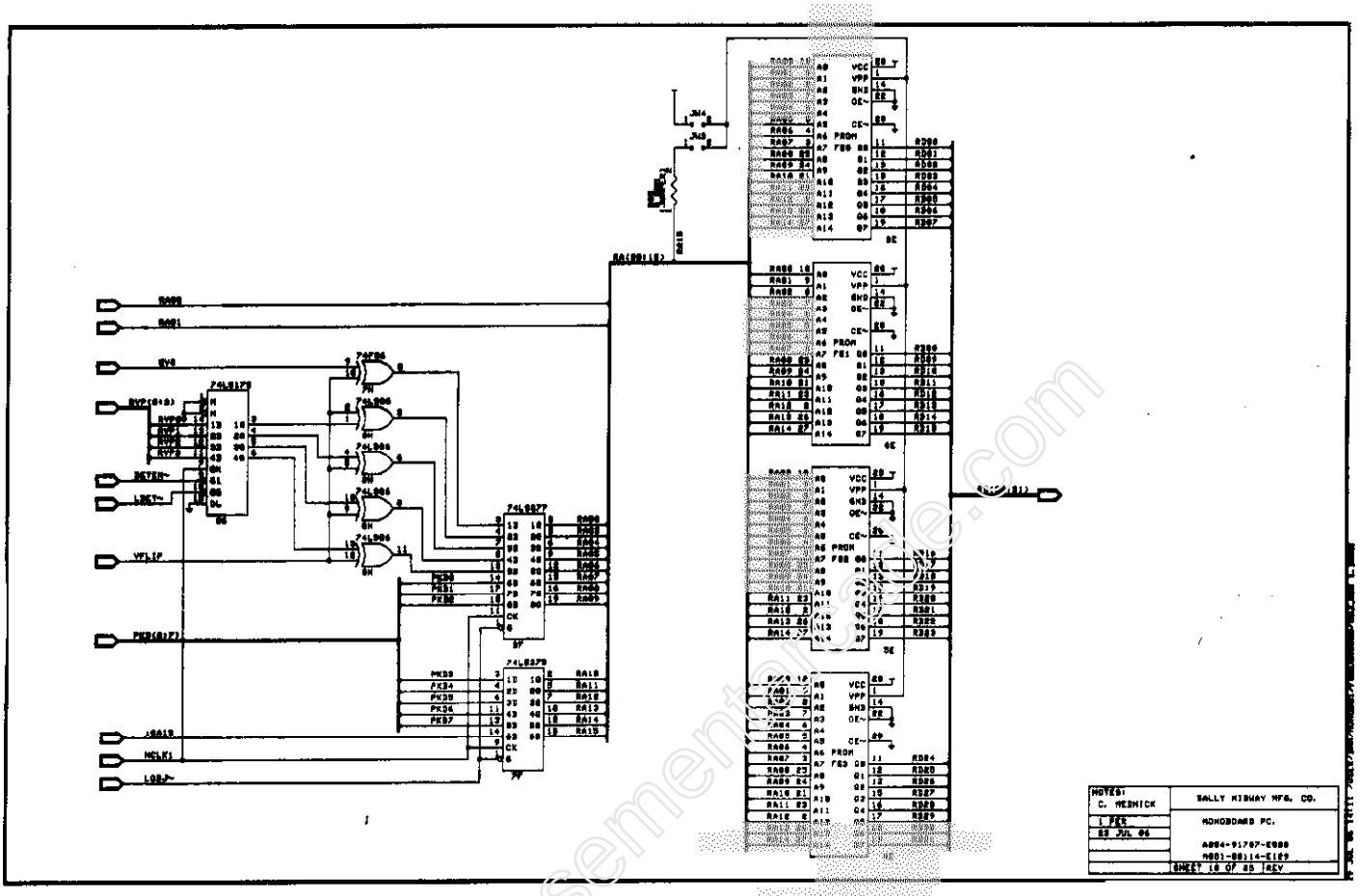

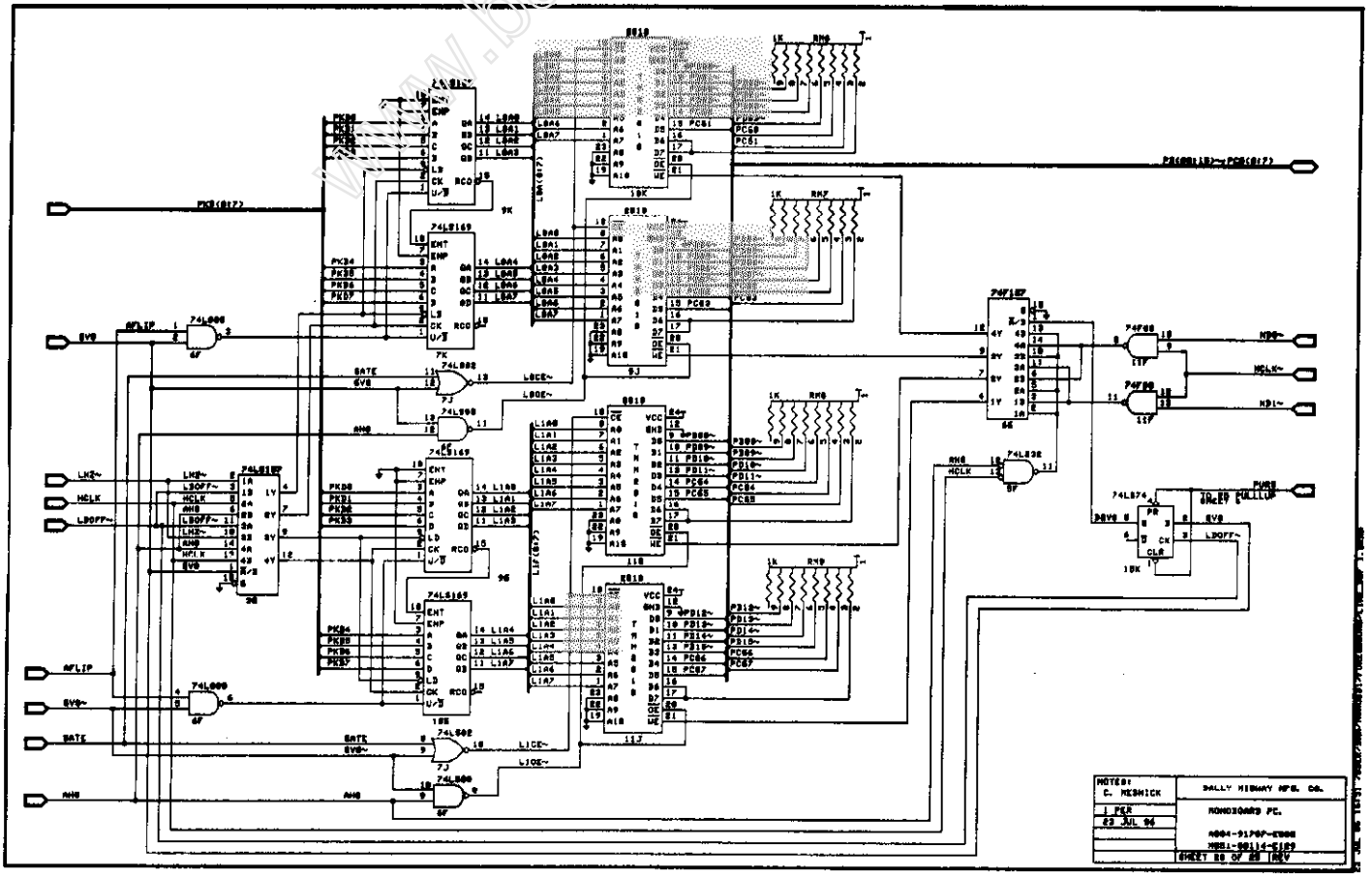

www.basementarcade.com

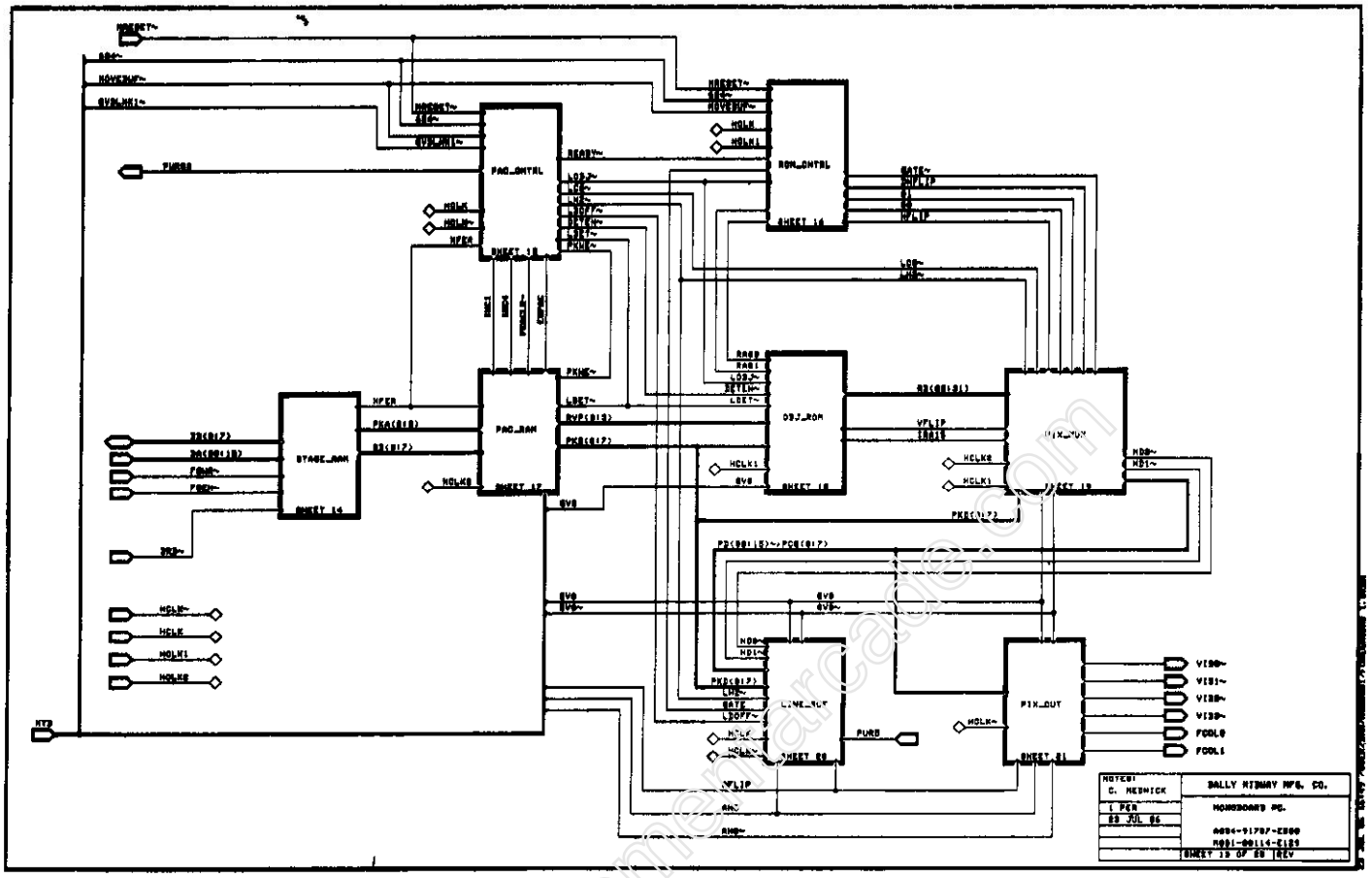

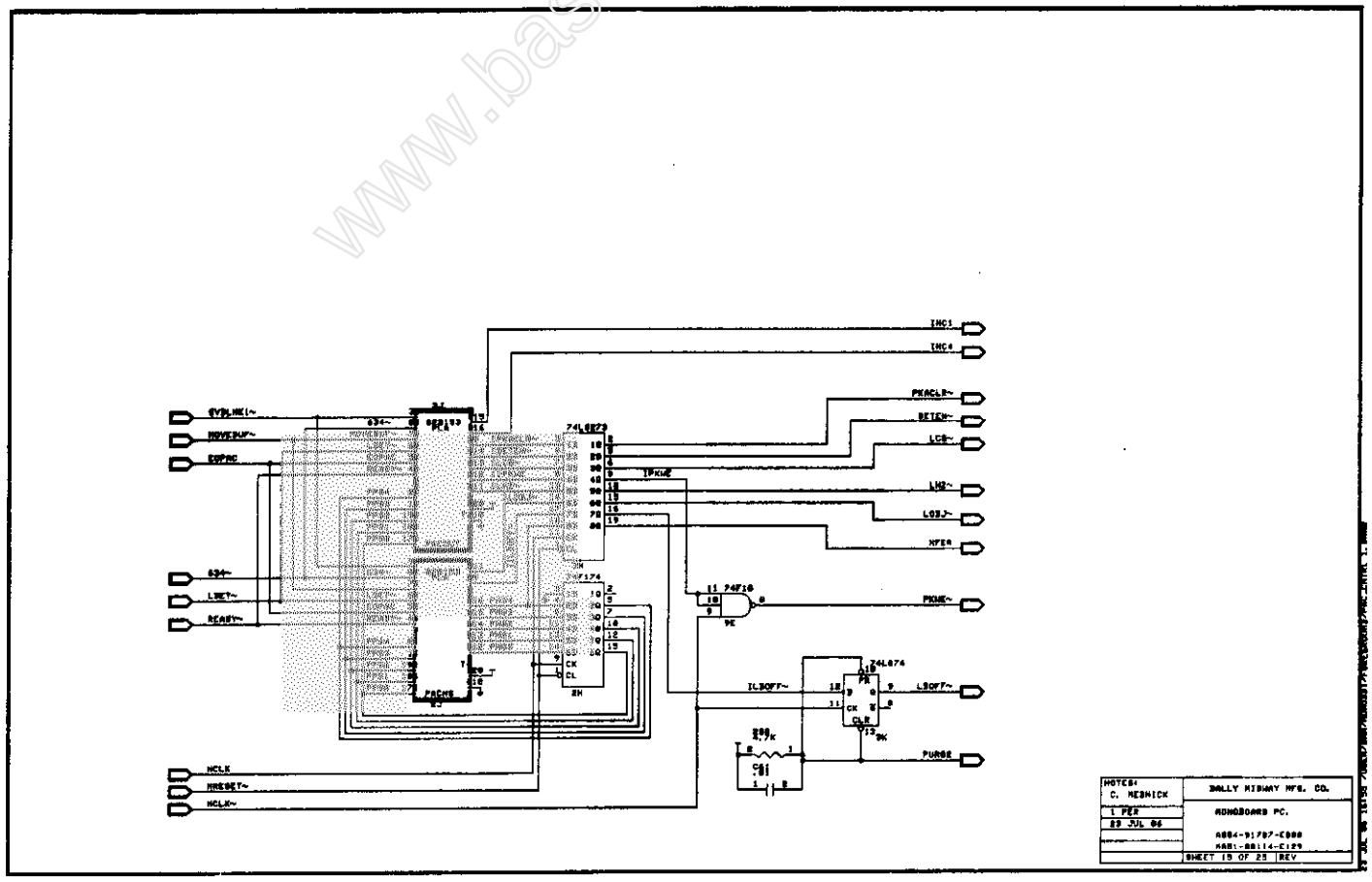

www.basementarcade.com

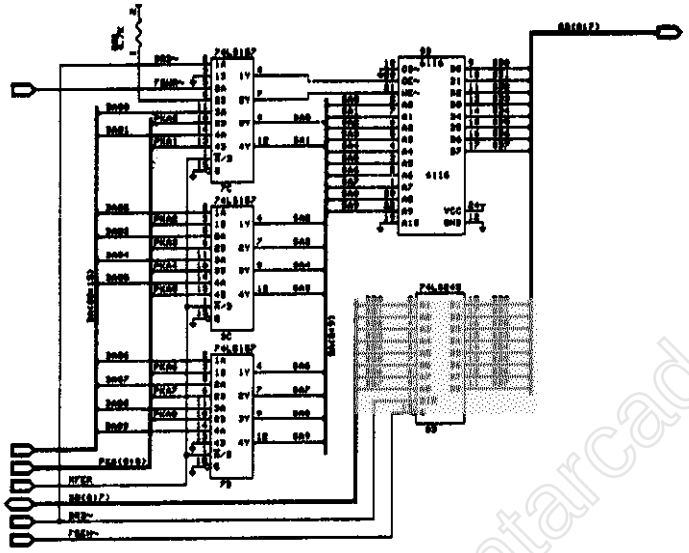

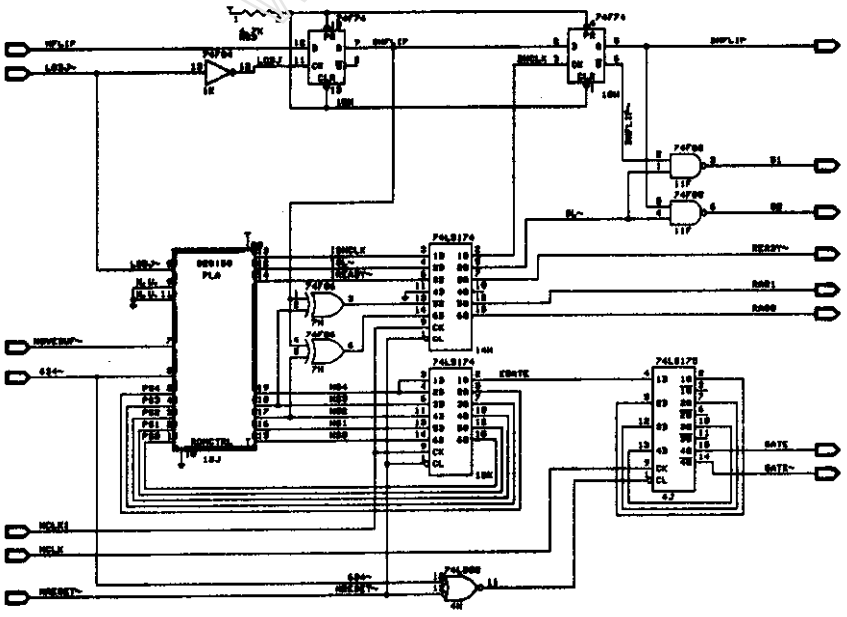

www.basementarcade.com

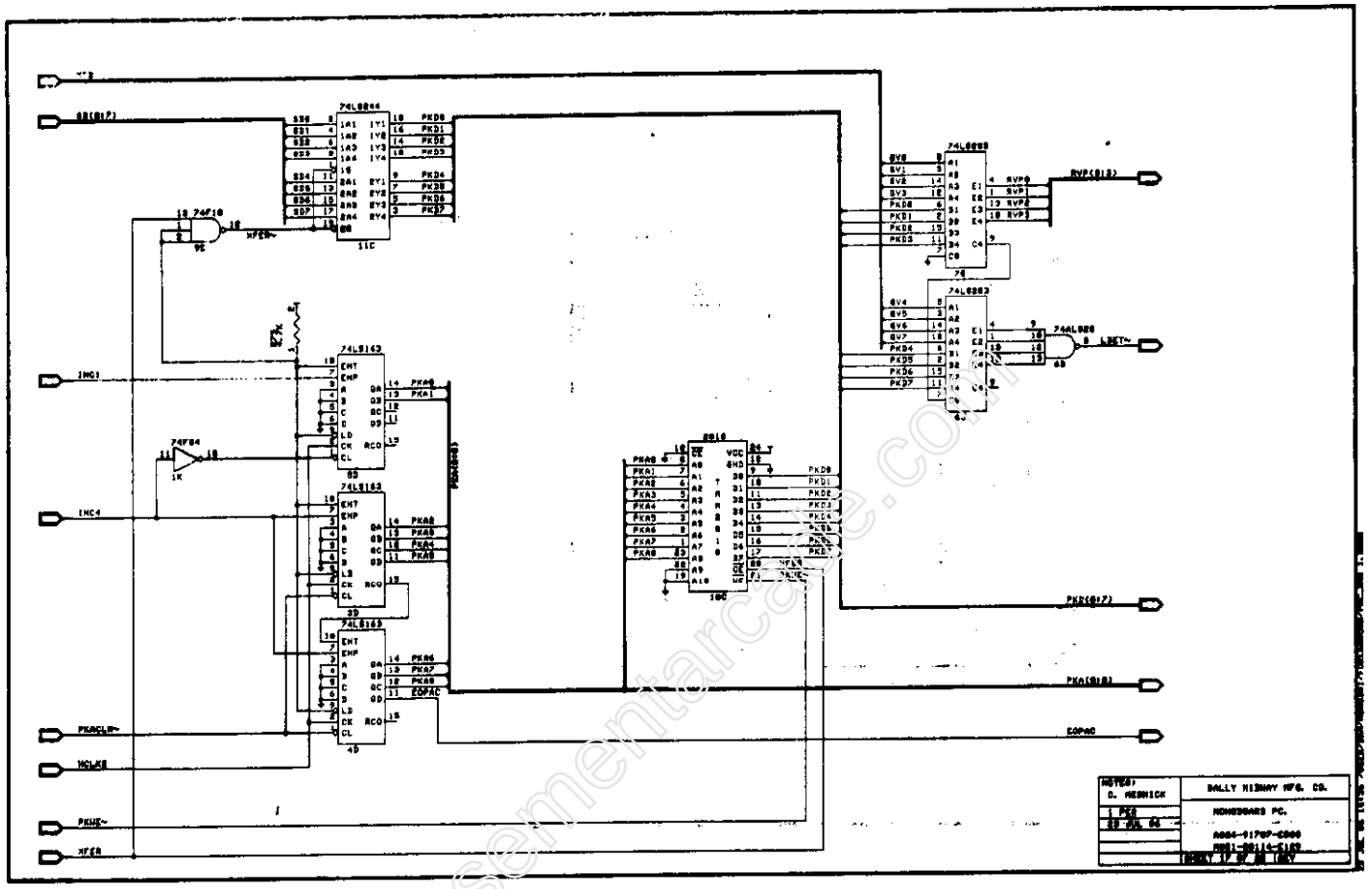

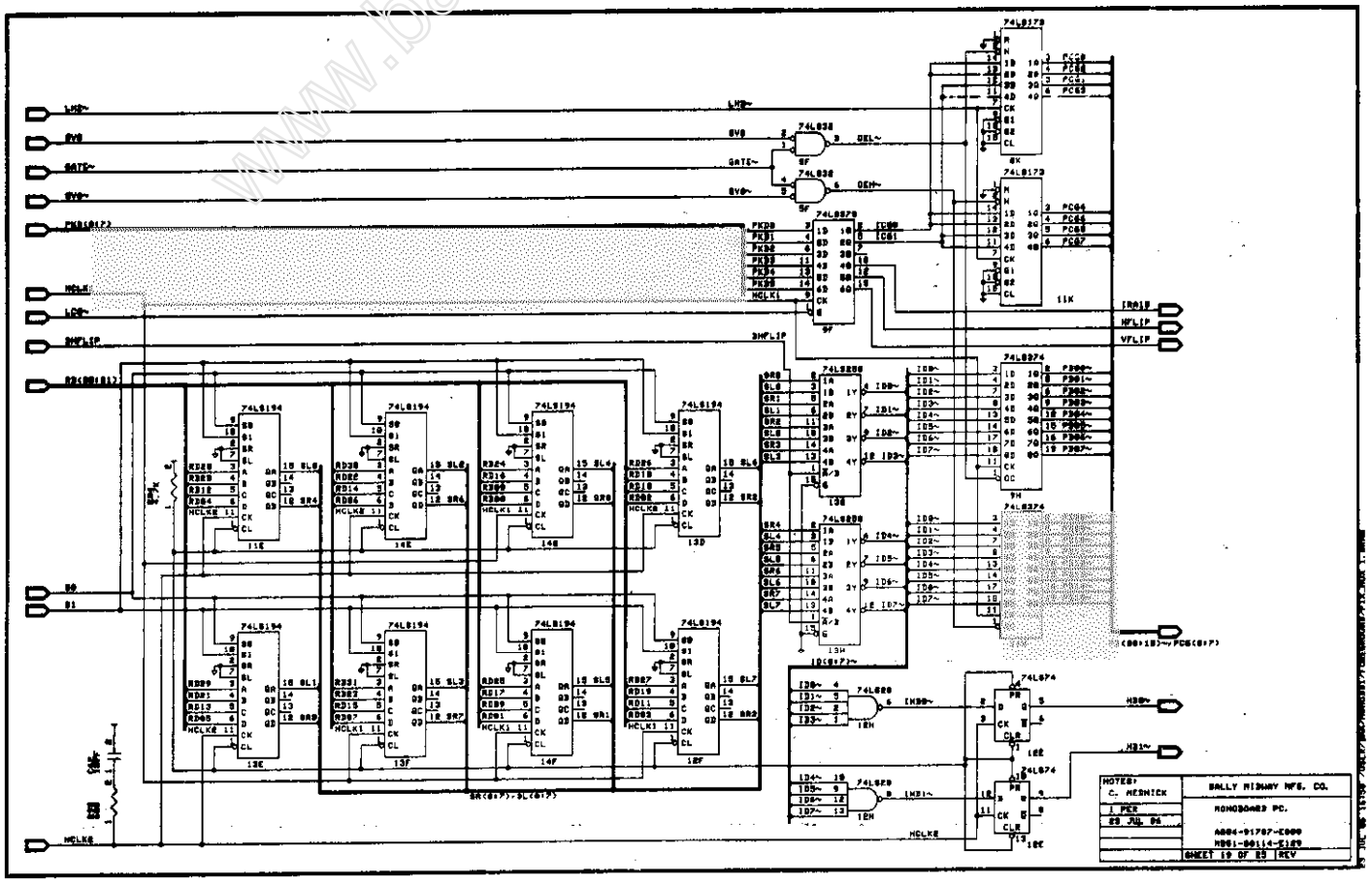

www.basementarcade.com

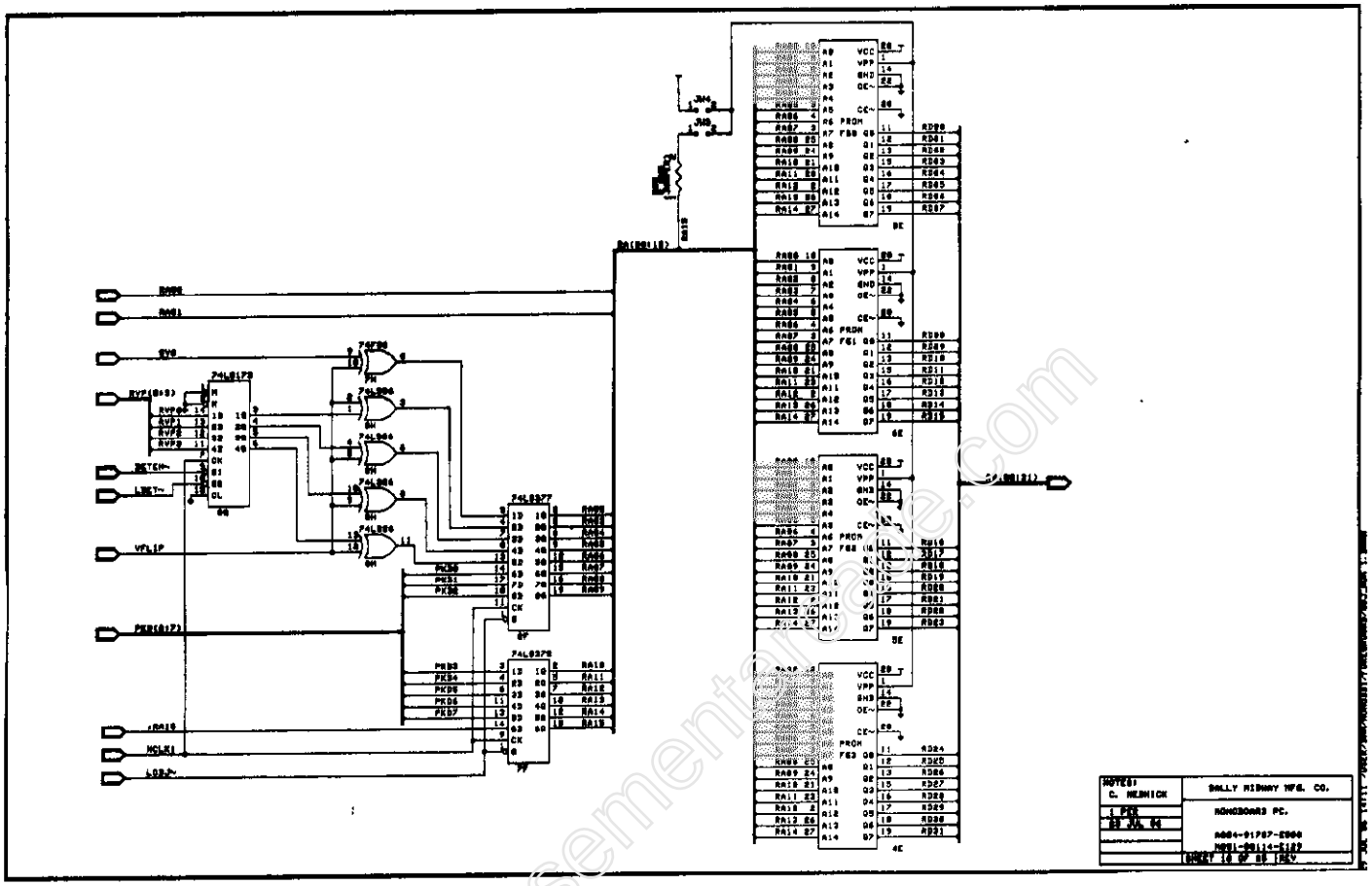

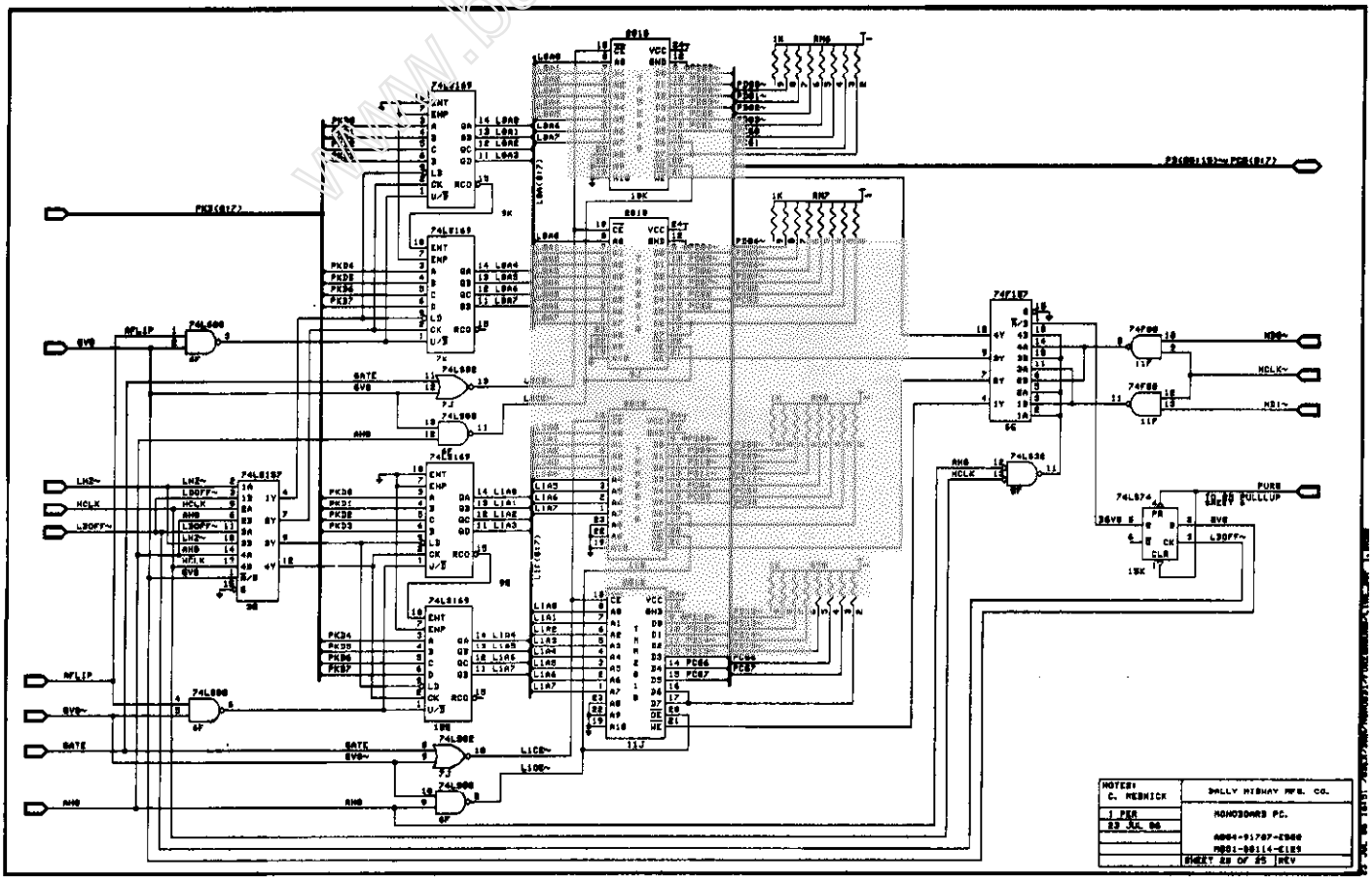

www.basementarcade.com

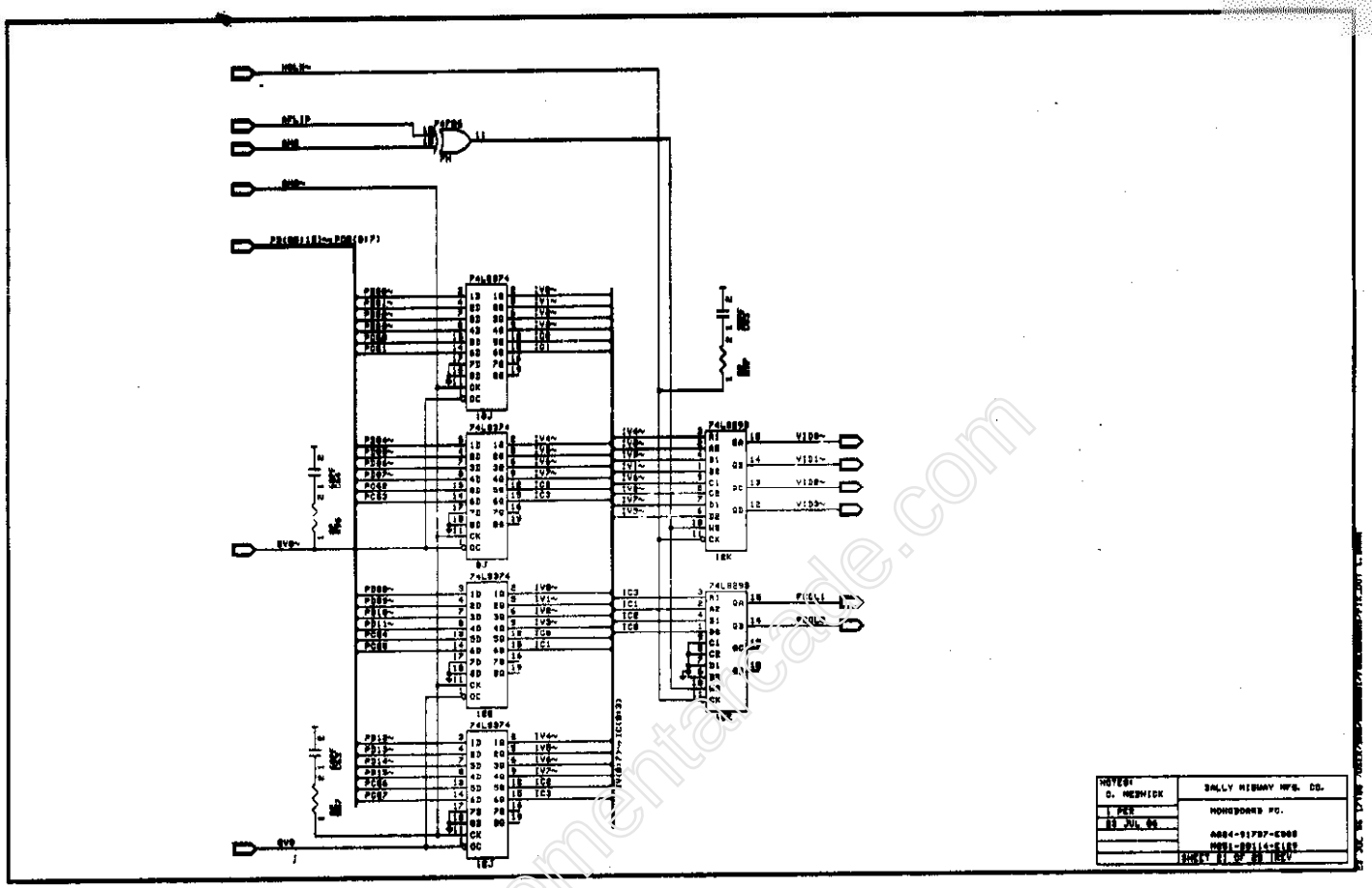

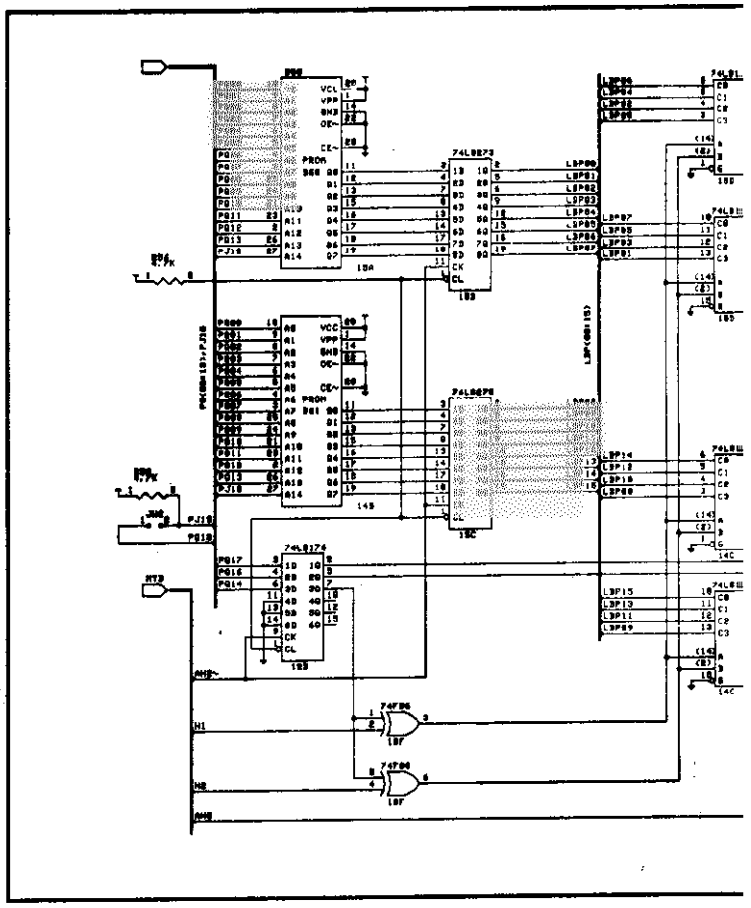

www.basementarcade.com

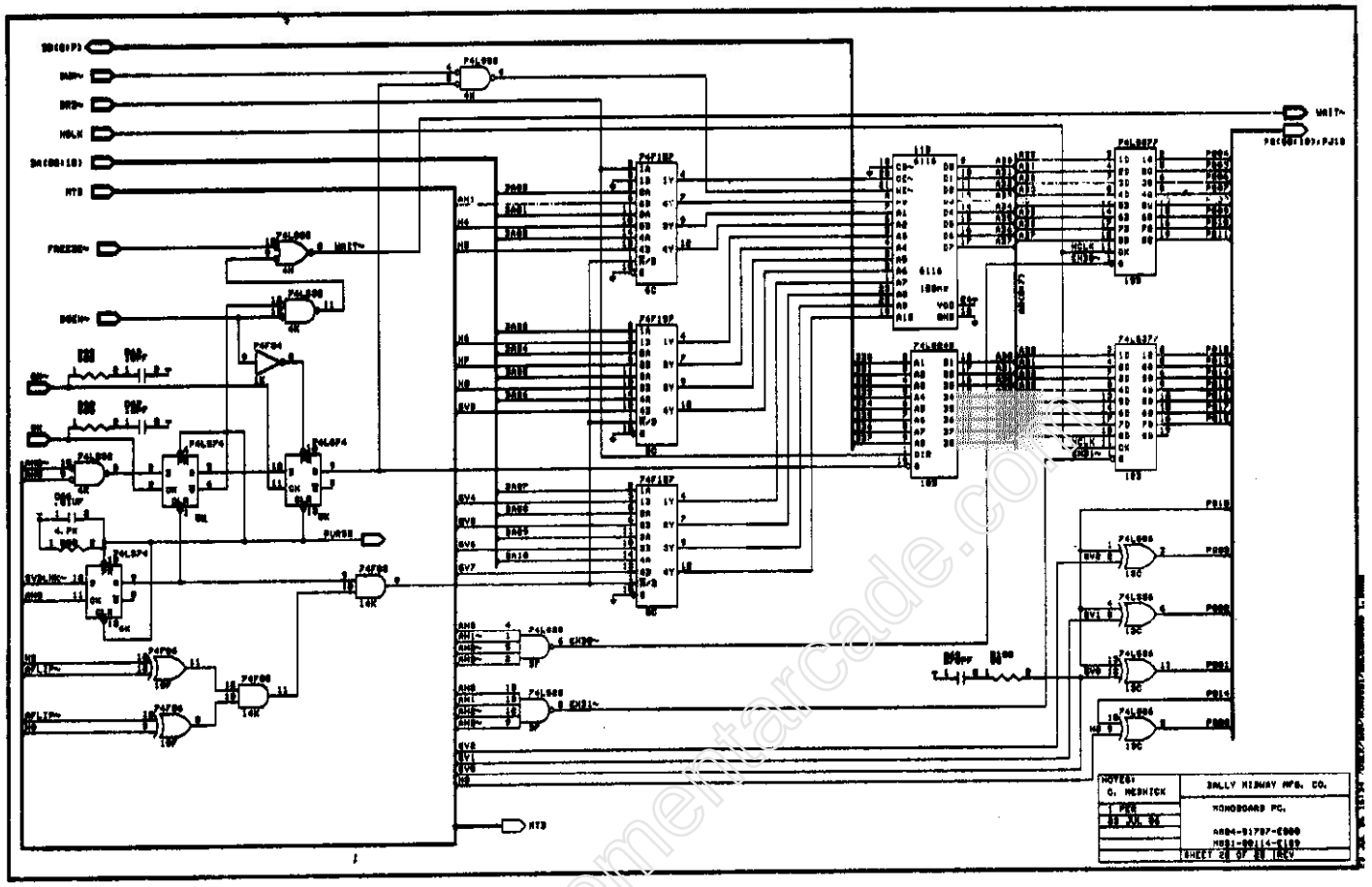

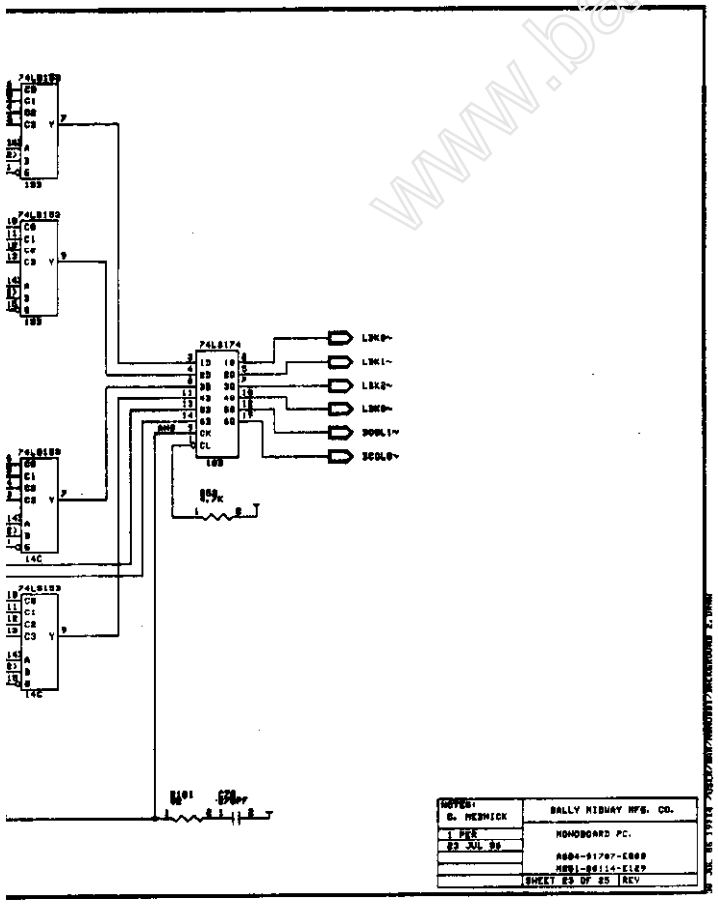

www.basementarcade.com

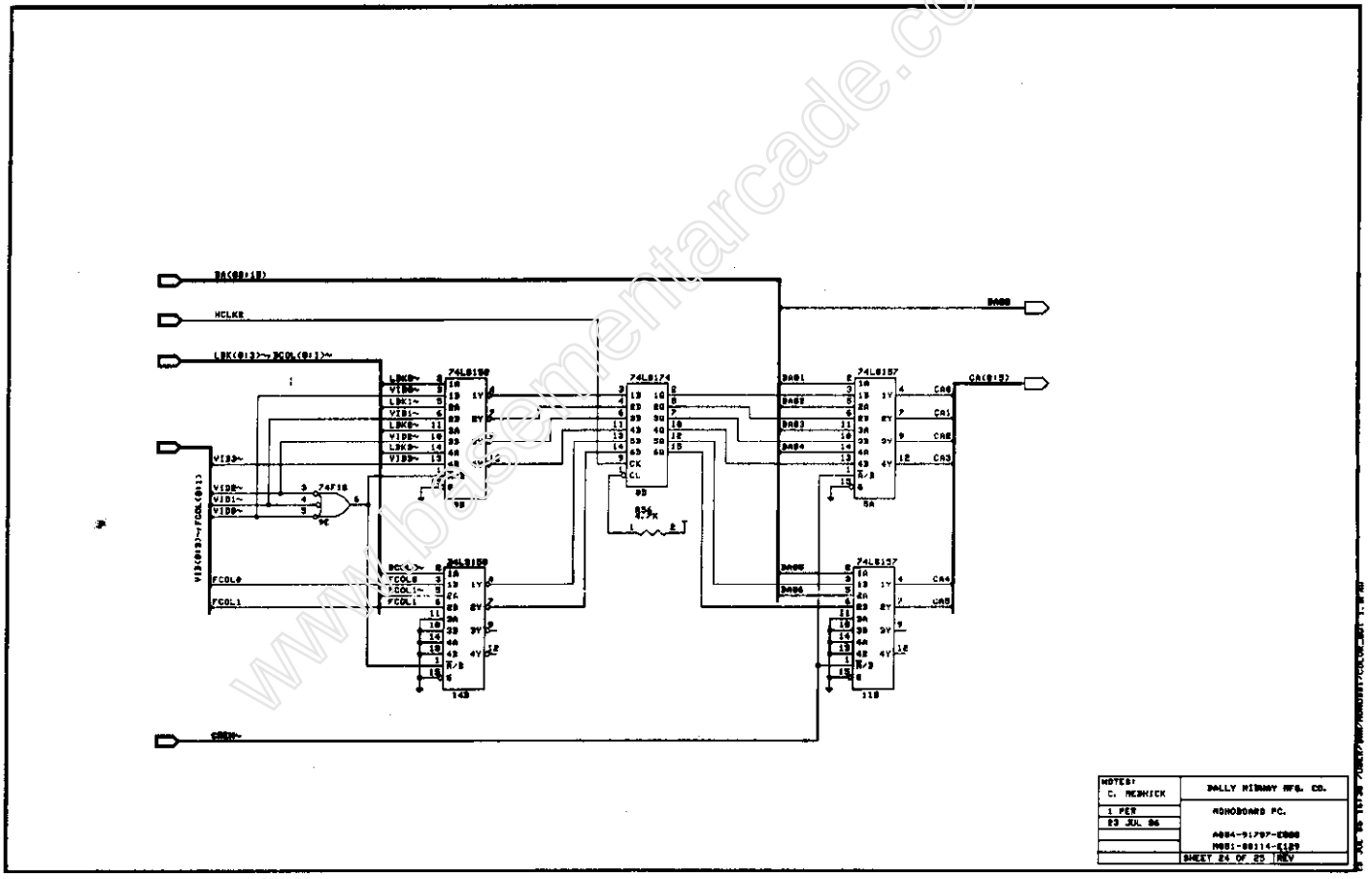

www.basementarcade.com

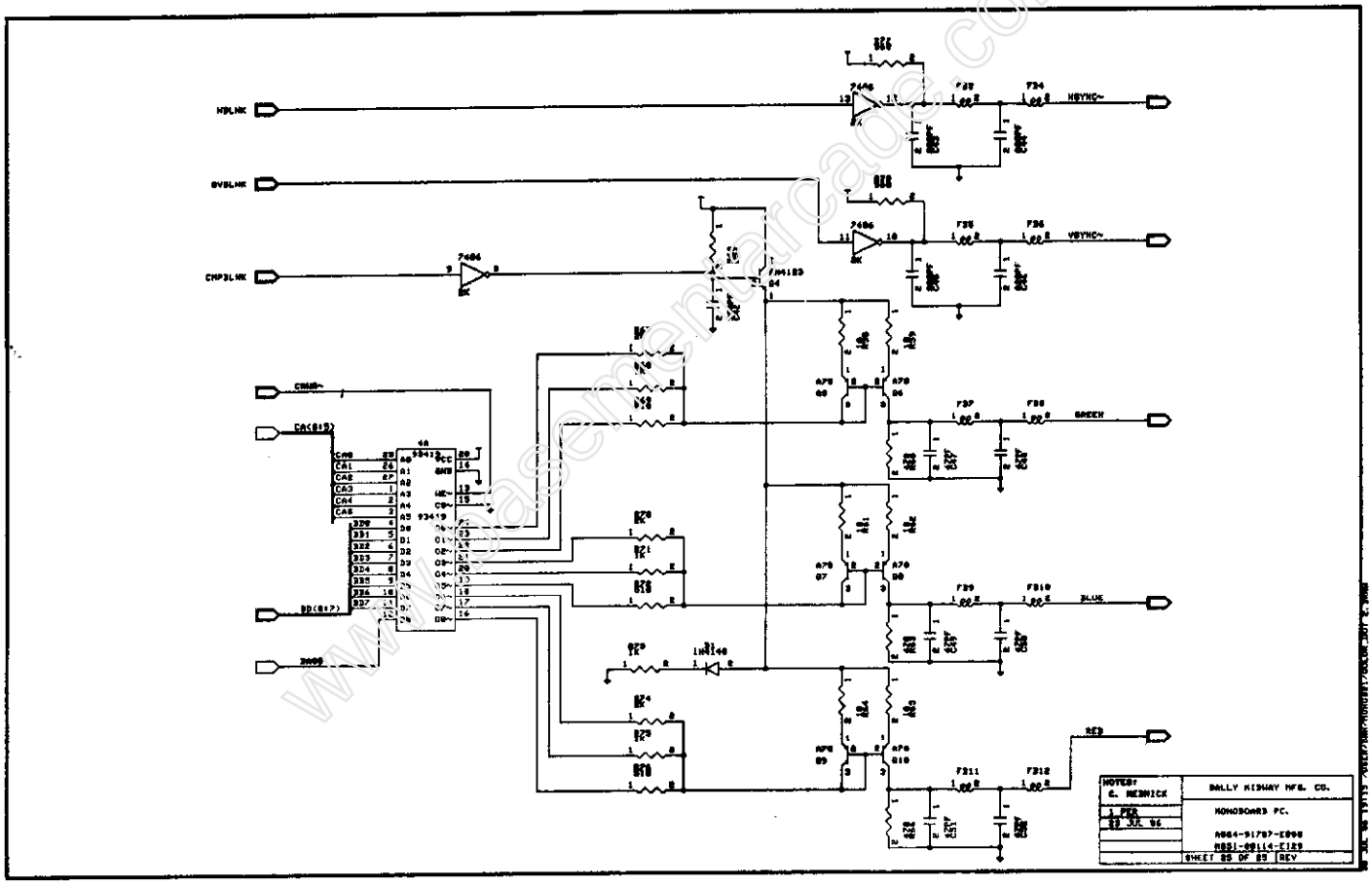
HBLNK
BVBLNK
CHP3LNK
CHAR~
CA(815)
BD(817)
3MHZ
HSYNC~
VSYNC~
GREEN
BLUE
RED
NOTES:
C. MEMNICK
BALLY MIDWAY MFG. CO.
MONOBOARD PC.
SHEET 25 OF 25
REV

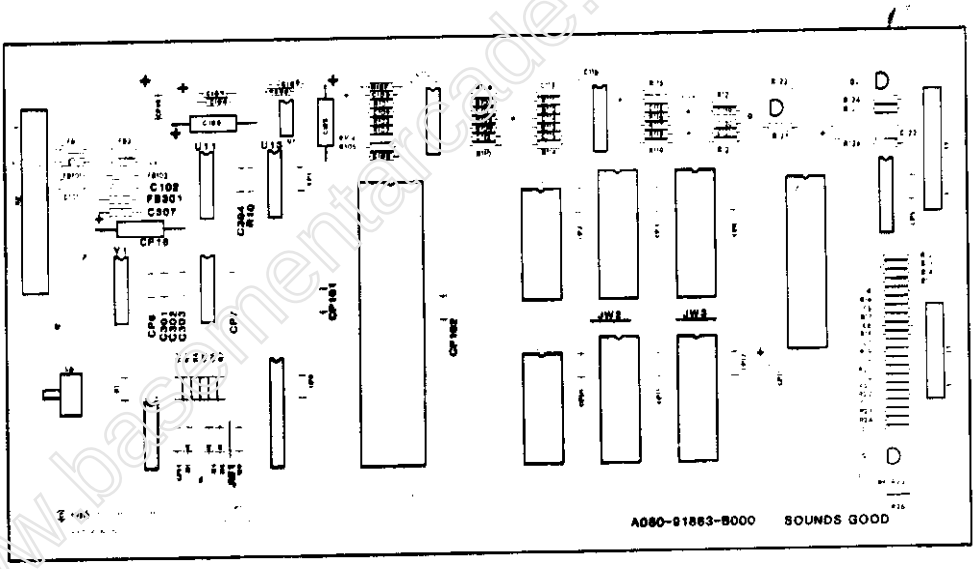

www.basementarcade.com

PROJECT ENG: CARY MEDNICK		USED ON	Bally MIDWAY MFG CO.
DO NOT SCALE DWG	NEXT ASSY	SCALE FULL	NO. REQ'D
DIM. TOLERANCES UNLESS SPECIFIED	DRN. DBS	SOUNDS GOOD ASSY. DWG. (A084-91863-B000)	PART NO M051 - 00114 - B150
DATE 6/12/86			

REVISIONS

DESIGNATION LIST

DESIGNATION	DESCRIPTION
CP1-CP7,CP9-CP13	.01MF AX CER.
CP14,CP15	10MF AX TANT.
CP16	100MF AX ELECT.
CP101,CP102	0.1UF AX CER.
C1,C2	390PF AX CER.
C3-C5	100PF AX CER.
C6,C7	820PF AX CER.
C8-C11	100PF AX CER.
C101,C102	390PF AX CER.
C103	1MF RD TANT.
C104	.01MF AX CER.
C105	47MF AX ELECT.
C106	680PF AX CER.
C107	.01MF AX CER.
C108	1MF RD TANT.
C109	68PF AX CER 10%
C110	.01 MF AX CER.
C111	150PF AX CER 10%
C112	470 PF AX CER 10%
C113	270 PF AX CER 10%
C114	1MF RD TANT.
C115	5600PF AX CER 10%
C116	.01MF AX CER.
C117	1MF RD TANT.
C118	270PF AX CER 10%
C119	10MF RD TANT.
C120	.01MF AX CER.
C121	10MF RD TANT.
C122	47MF AX ELECT.
C123	100MF AX ELECT.
C301	330PF AX CER.
C302,C303	470PF AX CER 10%
C304,C307	0.1UF AX CER.
R1-R3	4.7K OHM 1/4W CRBN.
R4	10K OHM 1/4W CRBN.
R5	100K OHM 1/4W CRBN.
R6-R7,R9	4.7K OHM 1/4W CRBN.
R10	1K OHM 1/4W CRBN.
R12-R14	4.7K OHM 1/4W CRBN.
R15,R16	10K OHM 1/4W CRBN.
R17,R18	100 OHM 1/4W CRBN.
R19-R21	10K OHM 1/4W CRBN.

www.basementarcade.com

DESIGNATION LIST

DESIGNATION	DESCRIPTION
R22	100K OHM 1/4W CRBN.
R23	10K OHM 1/4W CRBN.
R24	100K OHM 1/4W CRBN.
R25	100 OHM 1/4W CRBN.
R26	47K OHM 1/4W CRBN.
R101	12K OHM 1/4W CRBN.
R102	160K OHM 1/4W CRBN.
R103	100 OHM 1/4W CRBN.
R104	330K OHM 1/4W CRBN.
R105	24K OHM 1/4W CRBN.
R106	3.3K OHM 1/4W CRBN.
R107	24K OHM 1/4W CRBN.
R108	150K OHM 1/4W CRBN.
R109	82K OHM 1/4W CRBN.
R110	510K OHM 1/4W CRBN.
R111,R112	120K OHM 1/4W CRBN.
R113	33K OHM 1/4W CRBN.
R114	330K OHM 1/4W CRBN.
R115	150K OHM 1/4W CRBN.
R116	33K OHM 1/4W CRBN.
R117	18K OHM 1/4W CRBN.
R118	100K OHM 1/4W CRBN.
R119	510K OHM 1/4W CRBN.
R120	47K OHM 1/4W CRBN.
R121	1K OHM 1/4W CRBN.
R122	2.7K OHM 1/4W CRBN.
R123,R124	360 OHM 1/4W CRBN.
R125	180 OHM 1/4W CRBN.
R126	2.7K OHM 1/4W CRBN.
R127	560K OHM 1/4W CRBN.
R202	100 OHM 1/4W CRBN.
D1,D3-D4	1N5817
Q1-Q3	2N5305
U1	MC3340
U2,U3	LM359
U5	68000G8 CPU
U6	RAM 2K X 8
U7,U8	ROM/EPROM
U9	6821 P.I.A.
U10	AD7533JN DAC
U11	14584/40106
U12	74S74
U13	74LS04

DESIGNATION LIST

DESIGNATION	DESCRIPTION
U14	74F32
U15	SG01R0 PAL
U16	RAM 2K X 8
U17,U18	ROM/EPROM
FB1,FB2	FERRITE BEAD
FB101,FB102	FERRITE BEAD
FB301	FERRITE BEAD
ICS U5	64 PIN IC SOCKET
ICS U6	24 PIN IC SOCKET .600
ICS U7,U8	28 PIN IC SOCKET
ICS U9	40 PIN IC SOCKET
ICS U10	16 PIN IC SOCKET
ICS U15	24 PIN IC SOCKET .300
ICS U16	24 PIN IC SOCKET .600
ICS U17,U18	28 PIN IC SOCKET
J1	AUTO INSERT PIN TIN .02
J2	AUTO INSERT PIN TIN .04
J3	AUTO INSERT PIN TIN .02
JW1-JW3	ZERO OHM RESISTOR
LED 1	GREEN LED
SW1	SWITCH PC MTG.
Y1	16 MHZ XSTAL OSC.

www.pinbalsementarade.com

CROSS REFERENCE

DESCRIPTION	QTY.	DESIGNATION	PART NUMBER
68 PF AX CER 10%	1	C109	0307-00800-0011
100 PF AX CER	7	C3-C5,C8-C11	0304-00800-0001
150 PF AX CER 10%	1	C111	0307-00800-0010
270 PF AX CER 10%	2	C113,C118	0307-00800-0009
330 PF AX CER	1	C301	0300-00800-1402
390 PF AX CER	4	C1,C2,C101,C102	0986-00800-3000
470 PF AX CER 10%	3	C112,C302,C303	0307-00800-0008
680 PF AX CER	1	C106	0358-00800-0002
820 PF AX CER	2	C6,C7	0304-00800-0002
5600 PF AX CER 10%	1	C115	0307-00800-0007
.01 MF AX CER	17	C104,C107,C110 C116,C120,CP1-CP7, CP9-CP13	0986-00800-2200
0.1 UF AX CER	4	C304,C307,CP101,CP102	0986-00800-0200
1 MF RD TANT	4	C103,C108,C114,C117	0307-00800-0004
10 MF AX TANT	2	CP14,CP15	0986-00800-0700
10 MF RD TANT	2	C119,C121	0307-00800-0005
47 MF AX ELECT	2	C105,C122	0307-00800-0003
100 MF AX ELECT	2	CP16,C123	0307-00800-0006
100 OHM 1/4W CRBN	6	R17,R18,R25,R103, R202	100E-00005-0033
180 OHM 1/4W CRBN	1	R125	100E-00005-0039
360 OHM 1/4W CRBN	2	R123,R124	100E-00005-0048
1K OHM 1/4W CRBN	2	R10,R121	100E-00005-0061
2.7K OHM 1/4W CRBN	2	R122,R126	100E-00005-0071
3.3K OHM 1/4W CRBN	1	R106	100E-00005-0074
4.7K OHM 1/4W CRBN	9	R1-R3,R6-R7,R9 R12-R14	100E-00005-0079
10K OHM 1/4W CRBN	7	R4,R15,R16,R19-R21, R23	100E-00005-0088
12K OHM 1/4W CRBN	1	R101	100E-00005-0090
18K OHM 1/4W CRBN	1	R117	100E-00005-0093
24K OHM 1/4W CRBN	2	R105,R107	100E-00005-0097
33K OHM 1/4W CRBN	2	R113,R116	100E-00005-0100
47K OHM 1/4W CRBN	2	R26,R120	100E-00005-0104
82K OHM 1/4W CRBN	1	R109	100E-00005-0112
100K OHM 1/4W CRBN	4	R5,R22,R24,R118	100E-00005-0115
120K OHM 1/4W CRBN	2	R111,R112	100E-00005-0118
150K OHM 1/4W CRBN	2	R108,R115	100E-00005-0120
160K OHM 1/4W CRBN	1	R102	100E-00005-0121
330K OHM 1/4W CRBN	2	R104,R114	100E-00005-0128
510K OHM 1/4W CRBN	2	R110,R119	100E-00005-0133
560K OHM 1/4W CRBN	1	R127	100E-00005-0134
1N5817	3	D1,D3-D4	103E-00003-0009
2N5305	3	Q1-Q3	0360-00802-0012
74LS04	1	U13	0304-00803-0060
74F32	1	U14	0304-00803-0059

www.basementarcade.com

SOUNDS GOOD
A084-91863-B000
M051-00114-B151 (Page 5 of 5)

CROSS REFERENCE

DESCRIPTION	QTY.	DESIGNATION	PART NUMBER
74S74	1	U12	0304-00803-0061
14584/40106	1	U11	0304-00803-0056
6821 PIA	1	U9	0304-00803-0054
68000G8 CPU	1	U5	0304-00803-0051
AD7533JN DAC	1	U10	0304-00803-0055
SG01RO PAL	1	U15	0E36-00803-0009
LM359	2	U2,U3	0304-00803-0053
MC3340	1	U1	0358-00803-0002
RAM 2KX8	2	U6,U16	0304-00803-0057
ROM/EPROM	1	U7	
ROM/EPROM	1	U8	SEE ROM/EPROM
ROM/EPROM	1	U17	CHART
ROM/EPROM	1	U18	
FERRITE BEAD	5	FB1,FB2,FB101,FB102, FB301	0316-00804-0002
16 PIN IC SOCKET	1	ICS U10	110E-00001-0003
24 PIN IC SOCKET .300	1	ICS U15	110E-00001-0009
24 PIN IC SOCKET .600	2	ICS U6,U16	110E-00001-0007
28 PIN IC SOCKET	4	ICS U7,U8,U17,U18	110E-00001-0010
40 PIN IC SOCKET	1	ICS U9	110E-00001-0011
64 PIN IC SOCKET	1	ICS U5	110E-00001-0016
AUTO INSERT PIN TIN .025 SQ	8	J1	0304-00804-0009
AUTO INSERT PIN TIN .025 SQ	11	J3	0304-00804-0009
AUTO INSERT PIN TIN .045 SQ	11	J2	0304-00804-0010
ZERO OHM RES	3	JW1-JW3	117E-00001-0003
GREEN LED	1	LED 1	119E-00001-0001
SWITCH PC MTG	1	SW1	0986-00804-3100
16 MHZ XSTAL OSC	1	Y1	0304-00804-0008
PC BOARD	1		A080-91671-G000

6-13-86 Released for Production, CMM.
6-26-86 Rev. 1.0 CMM - Changed R101 from 24K to 12K.

www.basementarcade.com

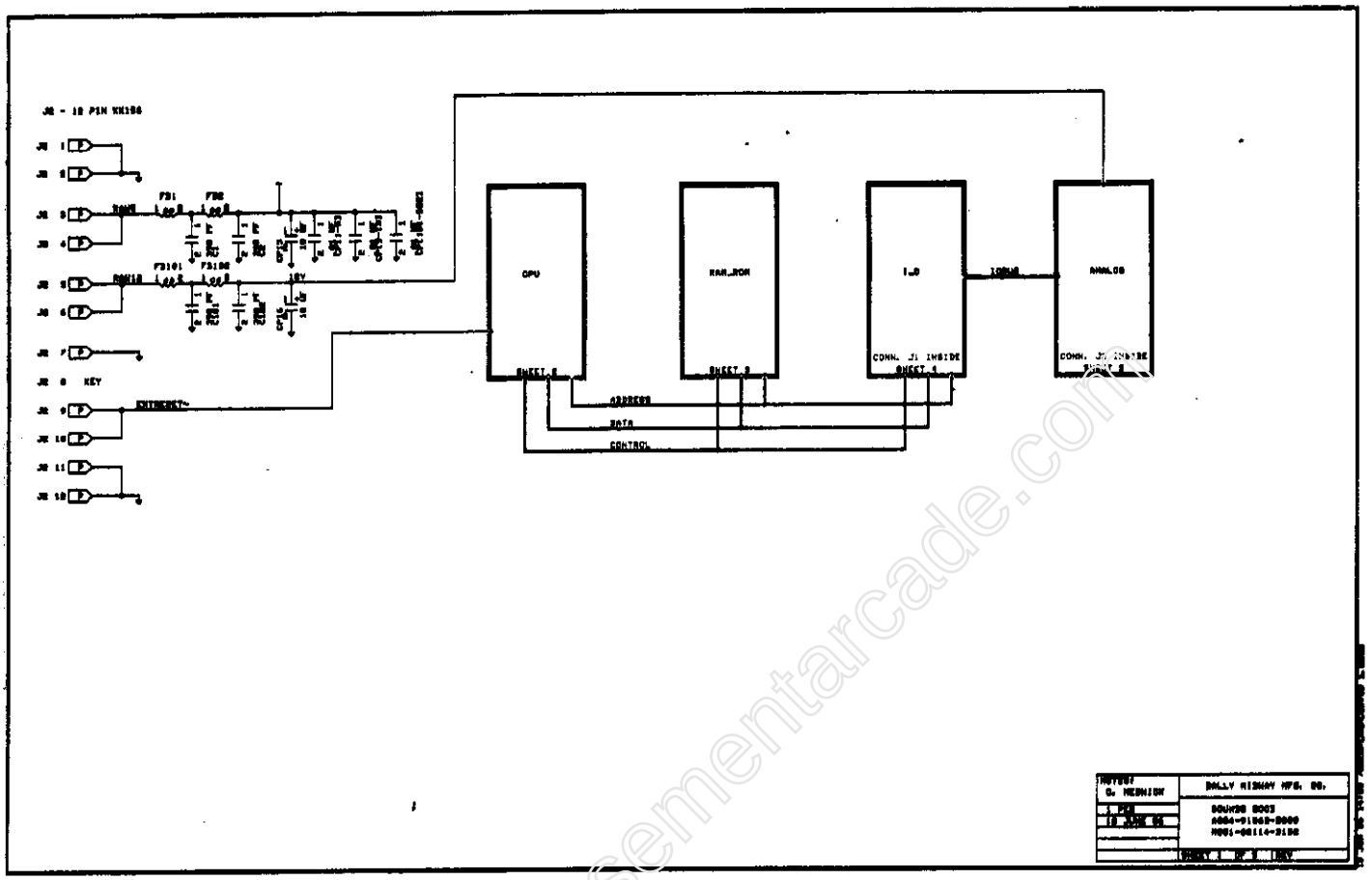

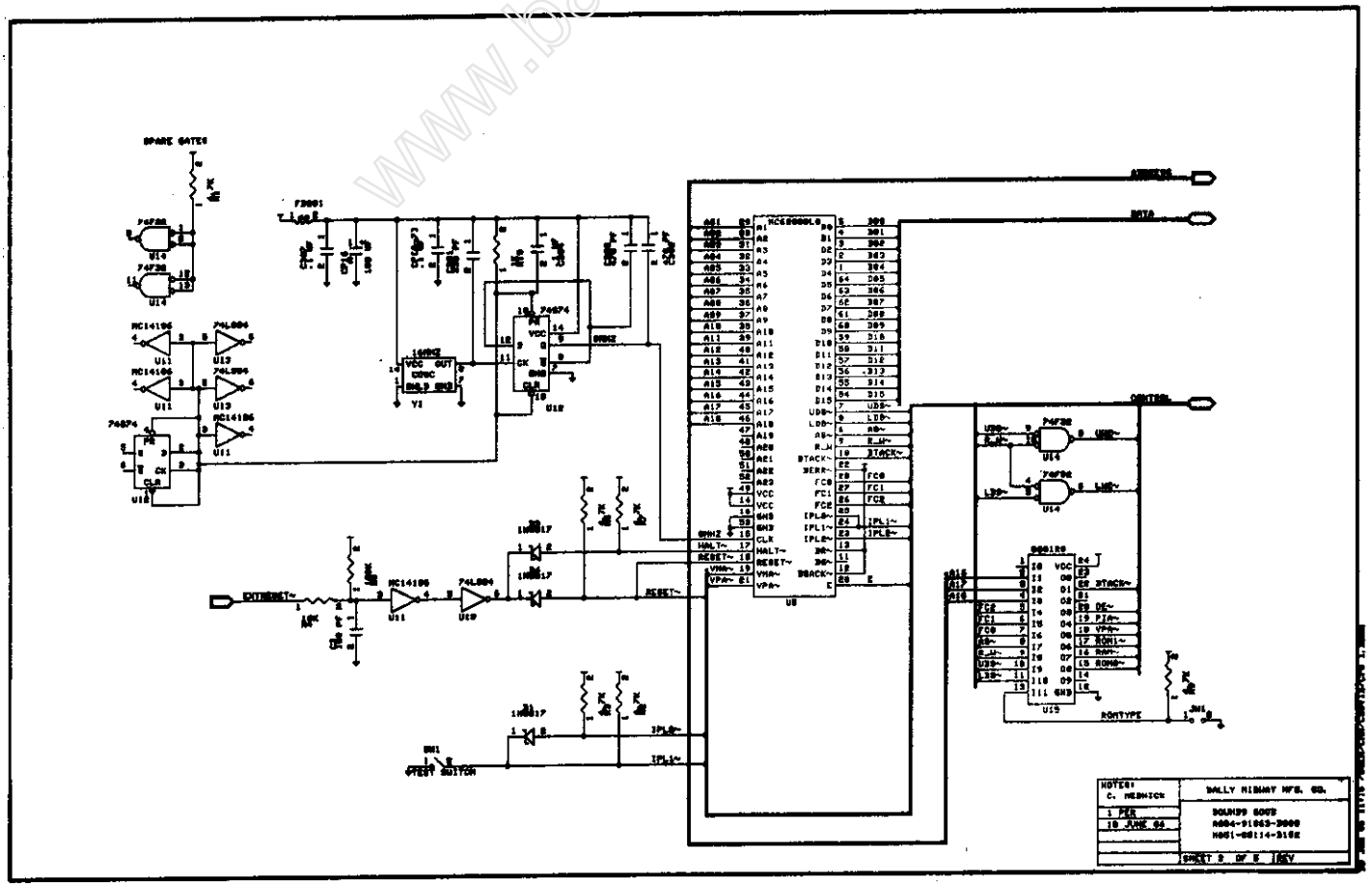

www.basementarcade.com

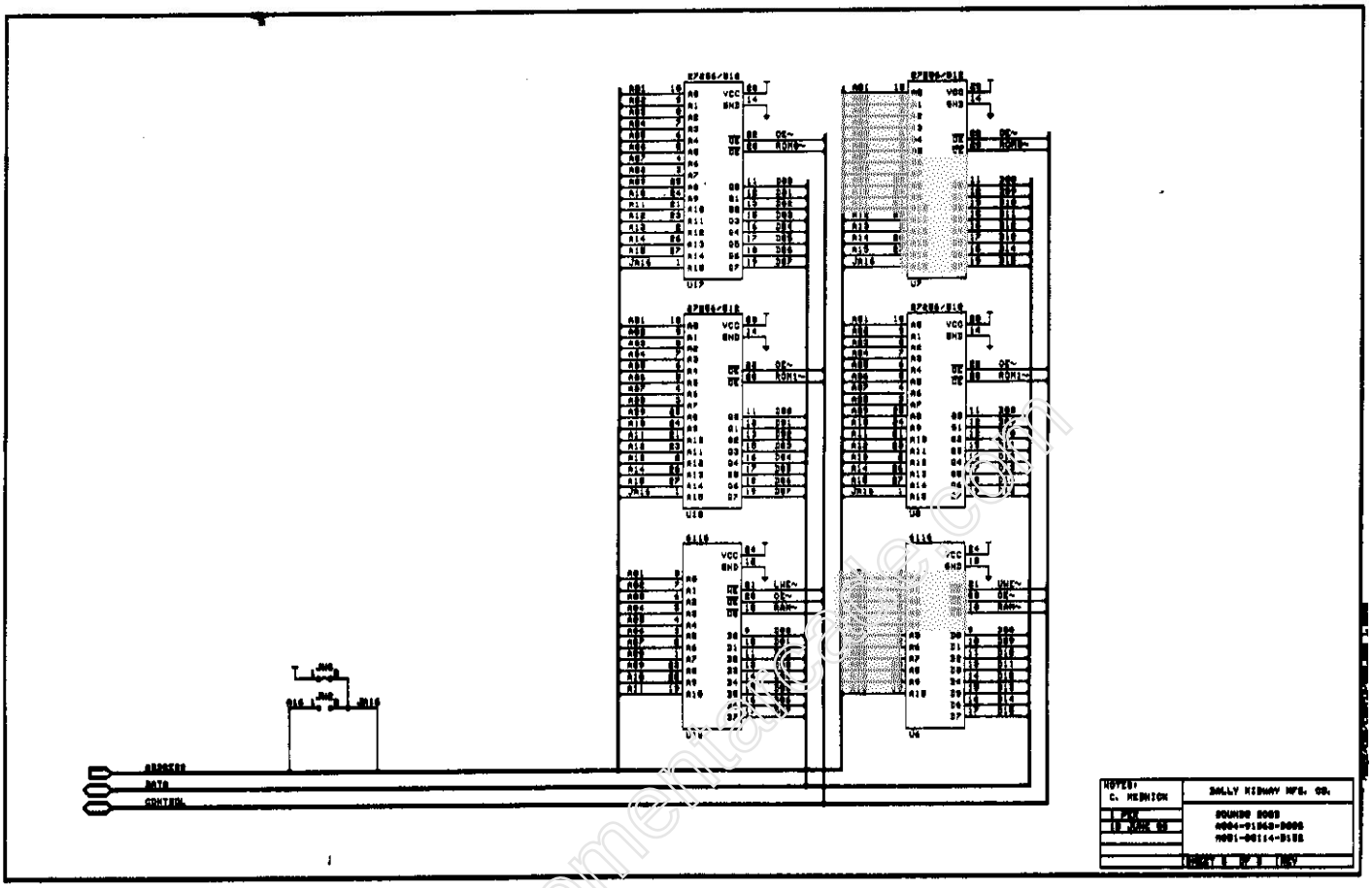

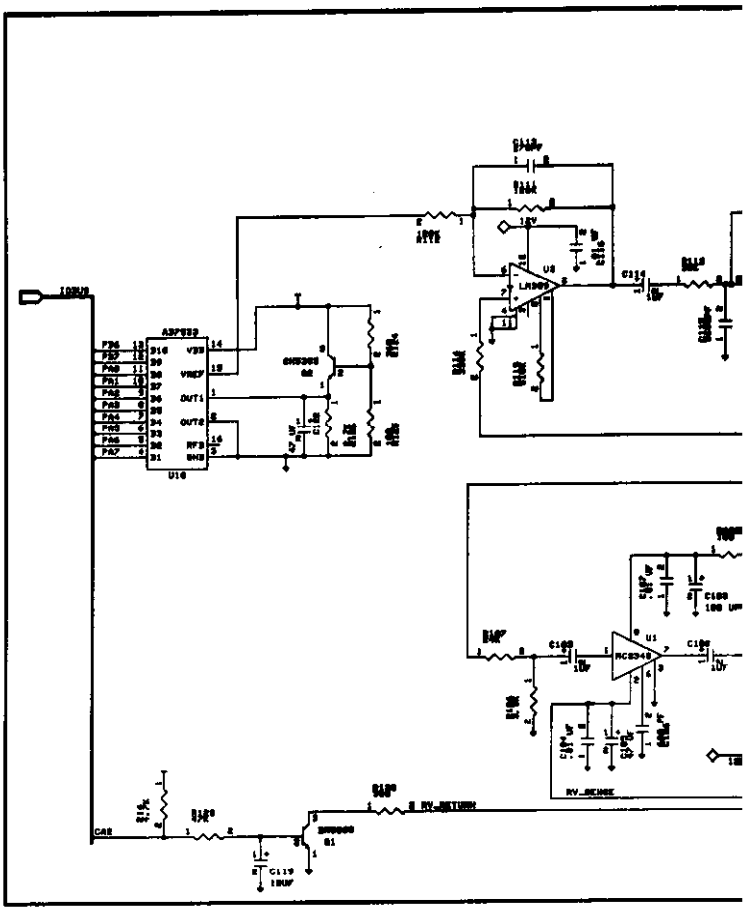

www.basementarcade.com

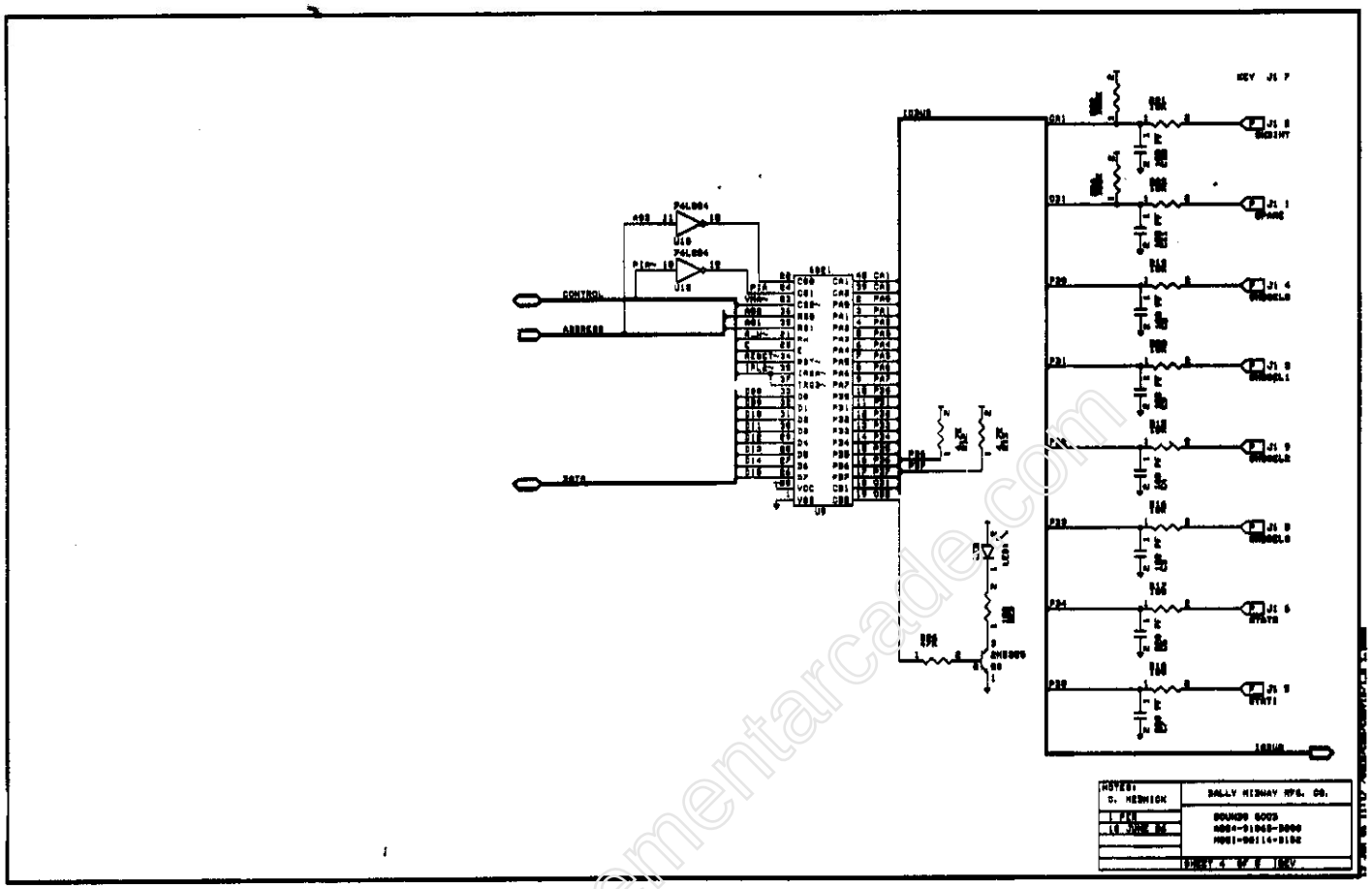

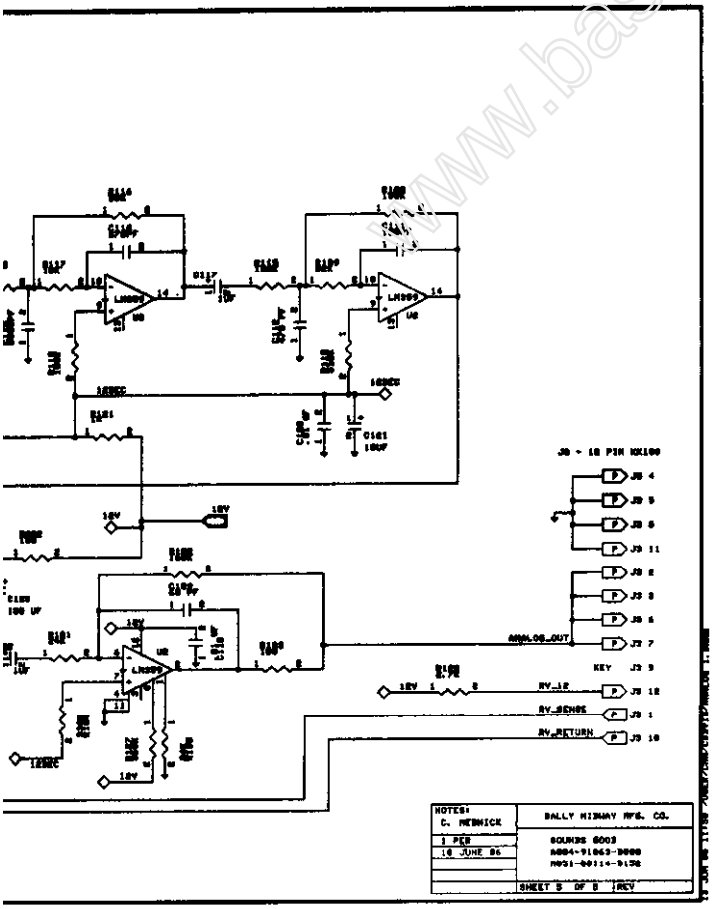

www.basementarcade.com

DESIGNATION LIST

DESIGNATION NO.	DESCRIPTION
C1,C2	4.7 MF 25V RD TANT
C3,C4	22 MF 6V RD TANT
C5,C6	470 MF 6V AX ELEC
C7-C10	.1 MF 50V AX CER
CP1	220 MF 25V AX ELEC
CP2,CP3	.1 MF 50V AX CER
R1,R2	2.7K OHM 1/4W 5% CRBN
R3,R4	27 OHM 1/4W 5% CRBN
R5-R8	1 OHM 1/2W 5% CRBN
U1,U2	MB3730
J1	7 PIN
J2	5 PIN
HSA1,2	HEATSINK ASSY
MH1-MH4	1/4" SPACER

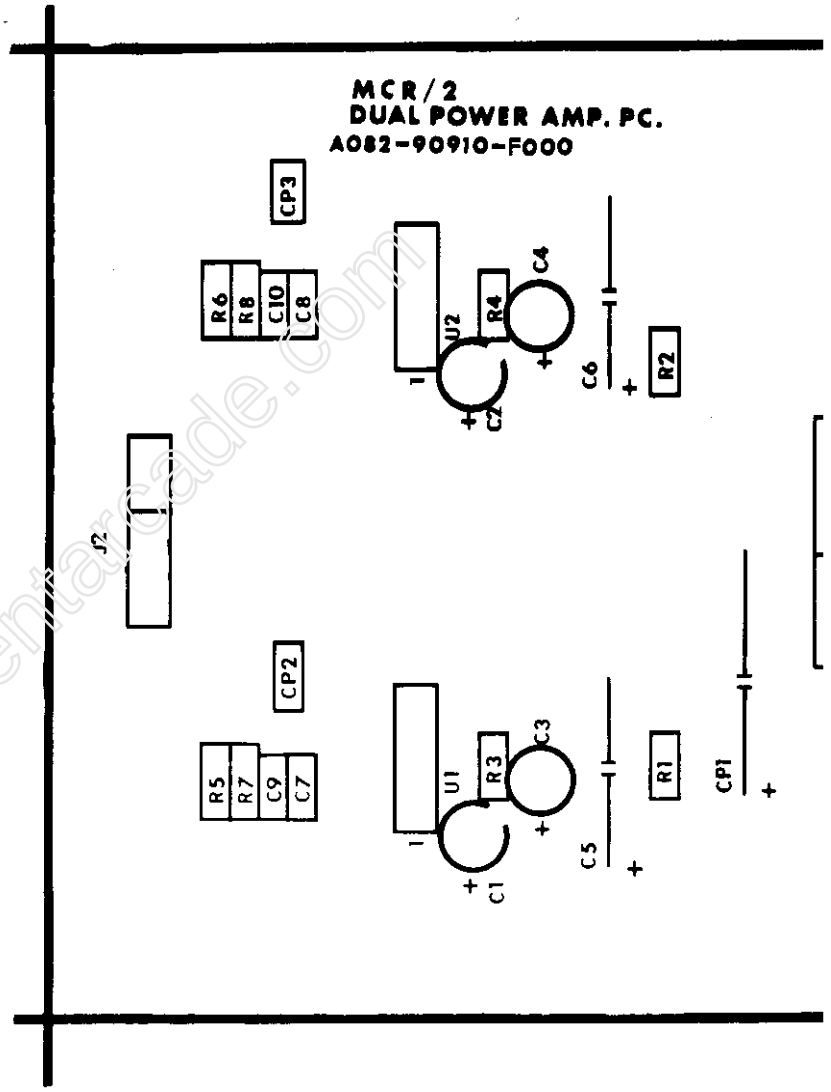

www.basementarcade.com

PROJECT ENG: C. MEDNICK

DIM. TOLERANCES	FIRST USED ON TRON	
UNLESS OTHERWISE SPEC.	DRN	DATE
CONCENTRICITY T.I.R. .002		
FRACTIONAL ..... ± 1/64	MECH CHK	MAT'L
DECIMAL ..... ± .005		
HOLE DIA. ..... + .002 − .000	ELEC CHK	FINISH
ANGLE ..... ± 1/2°		
DO NOT SCALE DWG.		

CROSS REFERENCE LIST

DESCRIPTION	QTY	DESIGNATION NO.	PART NUMBER
.1 MF 50V AX CER	6	C7-C10,CP2,CP3	0986-00800-1100
4.7 MF 25V RD TANT	2	C1,C2	0986-00800-3100
22 MF 6V RD TANT	2	C3,C4	0986-00800-1600
220 MF 25V AX ELEC	1	CP1	0986-00800-3200
470 MF 6V AX ELEC	2	C5,C6	0986-00800-1700
1 OHM 1/2W 5%	4	R5-R8	0062-02603-1XXX
27 OHM 1/4W 5%	2	R3,R4	0062-06803-1XXX
2.7K OHM 1/4W 5%	2	R1,R2	0062-19983-1XXX
MB3730	2	U1,U2	0066-188XX-XX4X
TIN .045 SQ PINS	12	J1,J2	0017-00033-0480
HEATSINK ASSY	2	HSA1,2	A986-00010-E000
1/4" SPACER	4	MH1-MH4	0017-00042-0320
PC BOARD	1		A080-90910-F000

J1

www.basementarcade.com

THIS DWG IS CONFIDENTIAL & PROPERTY OF BALLY/MIDWAY MFG. CO.

N

DATE 6/14/84 SCALE

ATL

NISH

Bally/MIDWAY MFG. CO.
FRANKLIN PARK, IL 60131

DUAL PWR AMP
ASSEMBLY DRWNG
A084-90910-F000

REVISIONS

PART NO.
M051-00986-F010

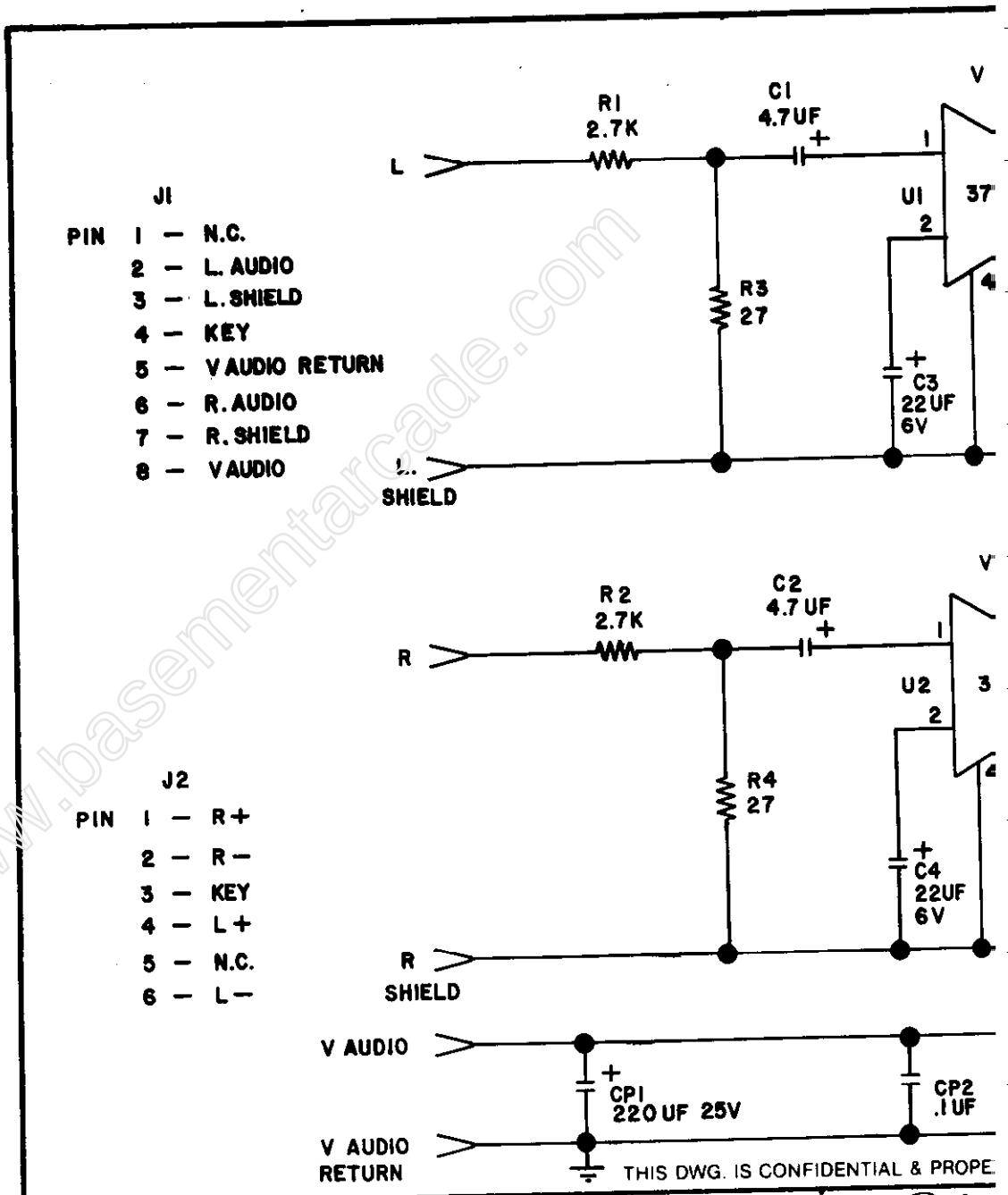

DIM. TOLERANCES	FIRST USED ON TRON			Bally
UNLESS OTHERWISE SPEC.	DRN M. M.	DATE 6/14/84	SCALE	FR.
CONCENTRICITY T.I.R. .002	MECH CHK	MAT'L		
FRACTIONAL ..... ±.1/64	ELEC CHK	FINISH		
DECIMAL ..... ±.005				
HOLE DIA. .... +.002 −.000				
ANGLE ..... ±1/2°				
DO NOT SCALE DWG.				

BRUNING · 40 · 107

www.basementarcade.com

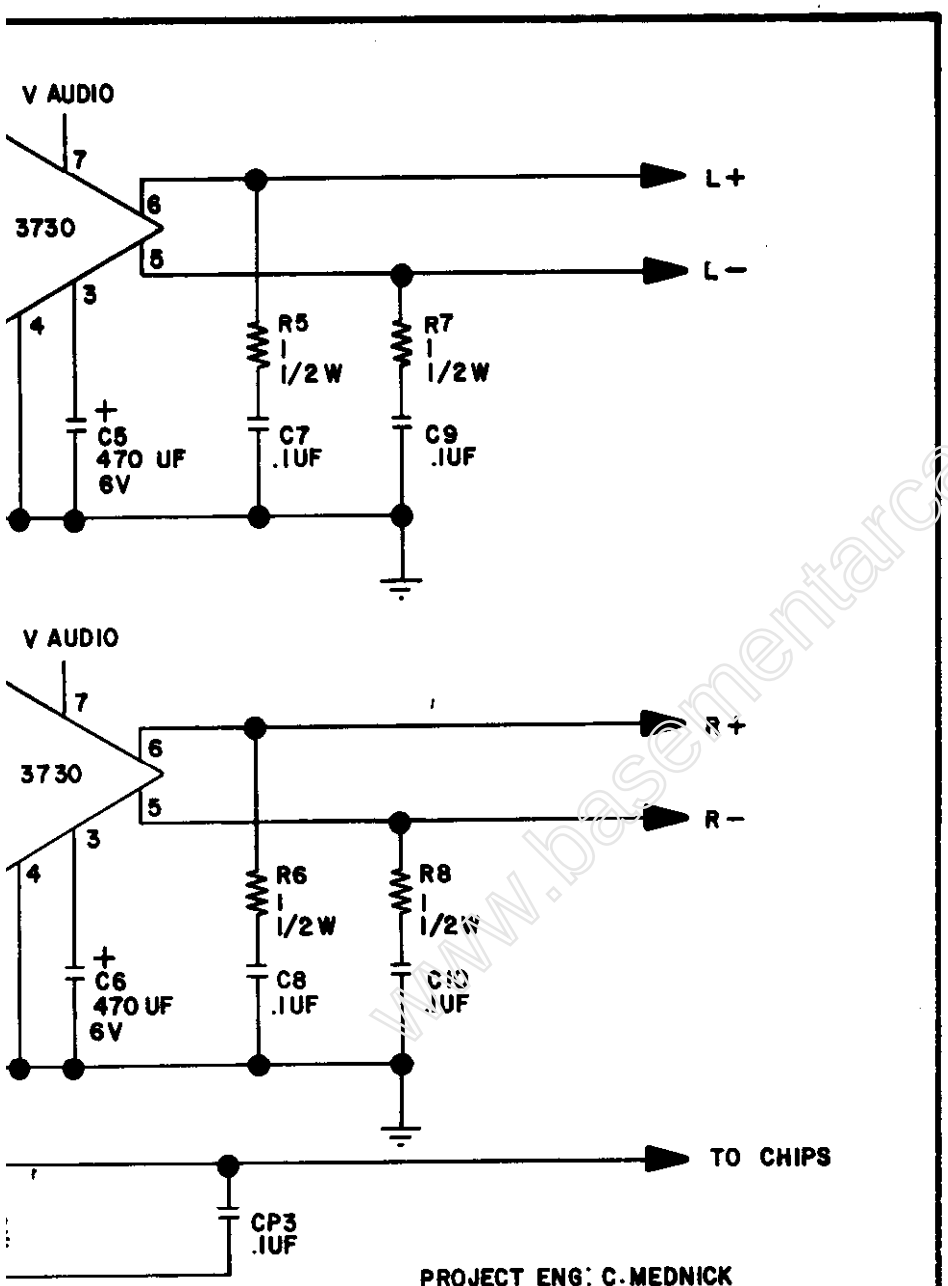

PROJECT ENG: C. MEDNICK

PERTY OF BALLY/MIDWAY MFG. CO.

y/MIDWAY MFG. CO.
FRANKLIN PARK, IL 60131

DUAL POWER AMP
SCHEMATIC
A080—90910—F000

REVISIONS

PART NO.
M051-00986-F011

www.basementarcade.com

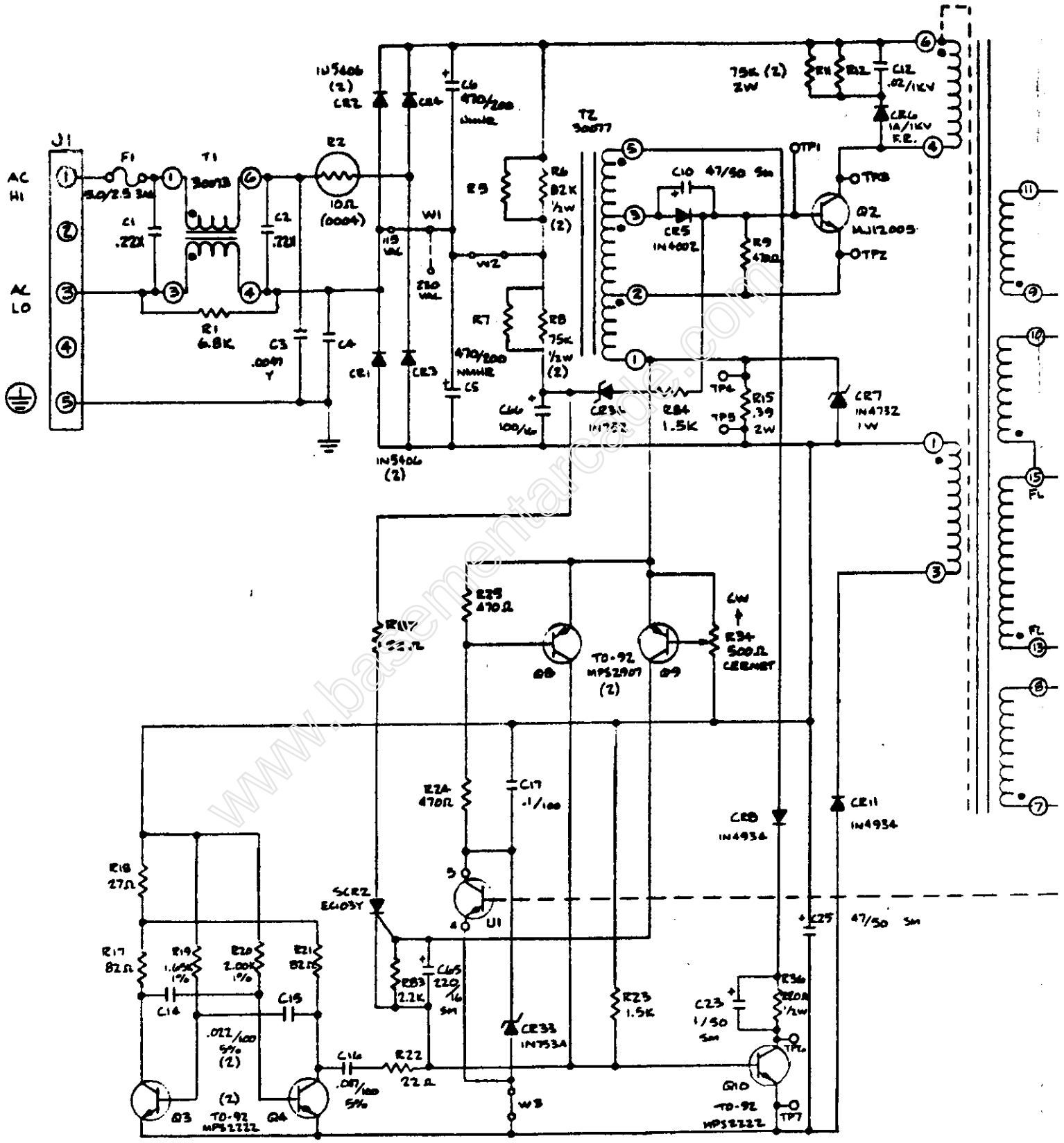

2. CAPACITOR VALUES IN MICROFARADS / VOLTS.

1. RESISTOR VALUES ARE IN OHMS ¼W, 5%, C.F.

NOTES: UNLESS OTHERWISE SPECIFIED.

FOR ADDITIONAL ELECTRICAL INFORMATION, REFER TO MECH. DWG. NO. 0017-00003-0543.

www.basementarcade.com

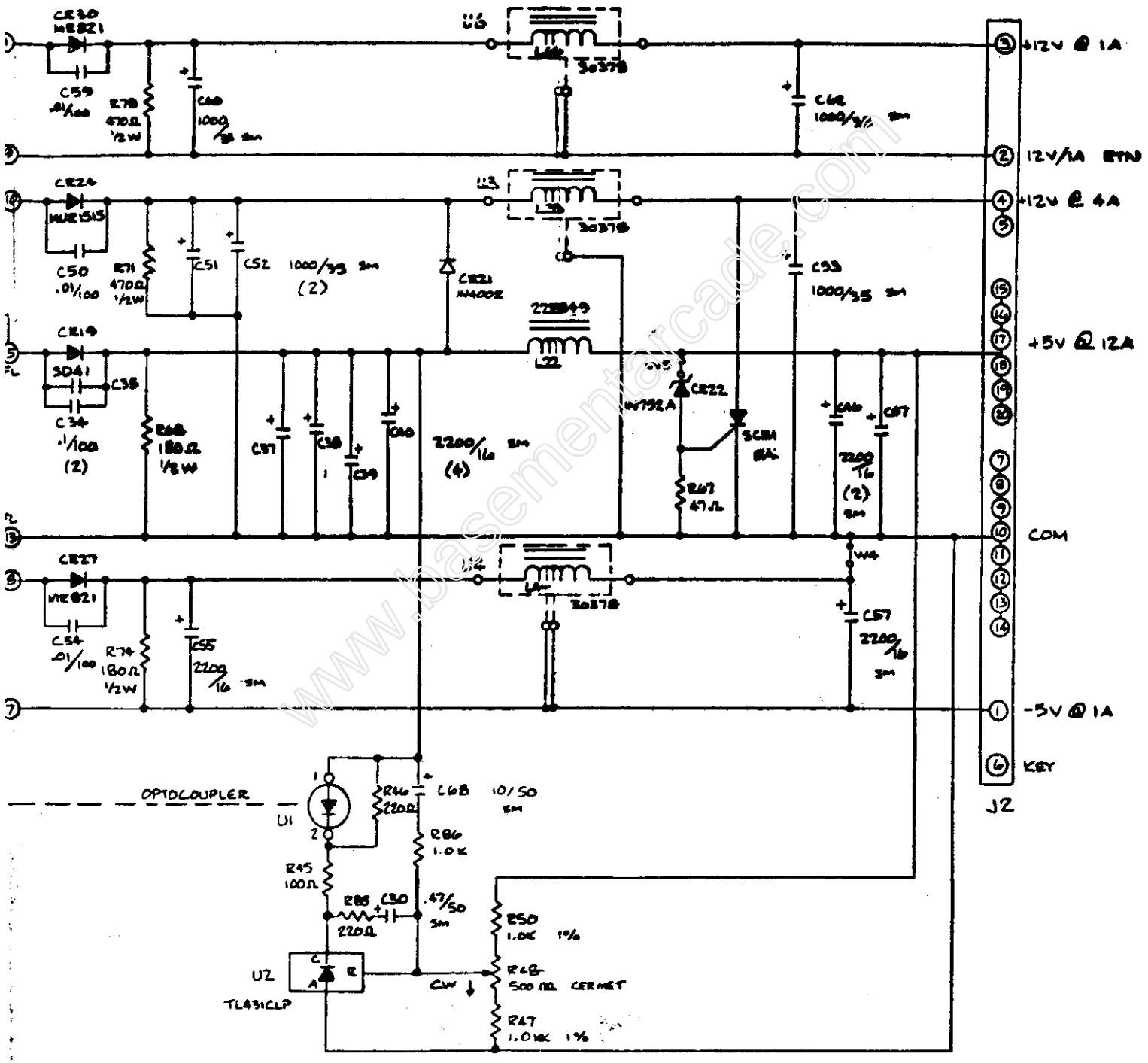

0017-00003-0543

M051-00945-A087

CONDOR INC.
CAMARILLO, CALIF 93010
(805) 484-2851

SCHEMATIC

SP1016

3-23

DRAWN S. WINKLES 5-10-84

SIZE D

DWG. NO. 31-SP1016

REV X

DO NOT SCALE DRAWING

www.basementarcade.com

A945-00059-C

UNI PWR SUPPLY CH

	105	115	210	220	230	240
BLK	5-8	5-11	8-14	11-14	11-14	11-14
BRN	14-15	14-15	—	—	—	—
BLU	4-7	4-10	4-7	4-7	4-10	4-13

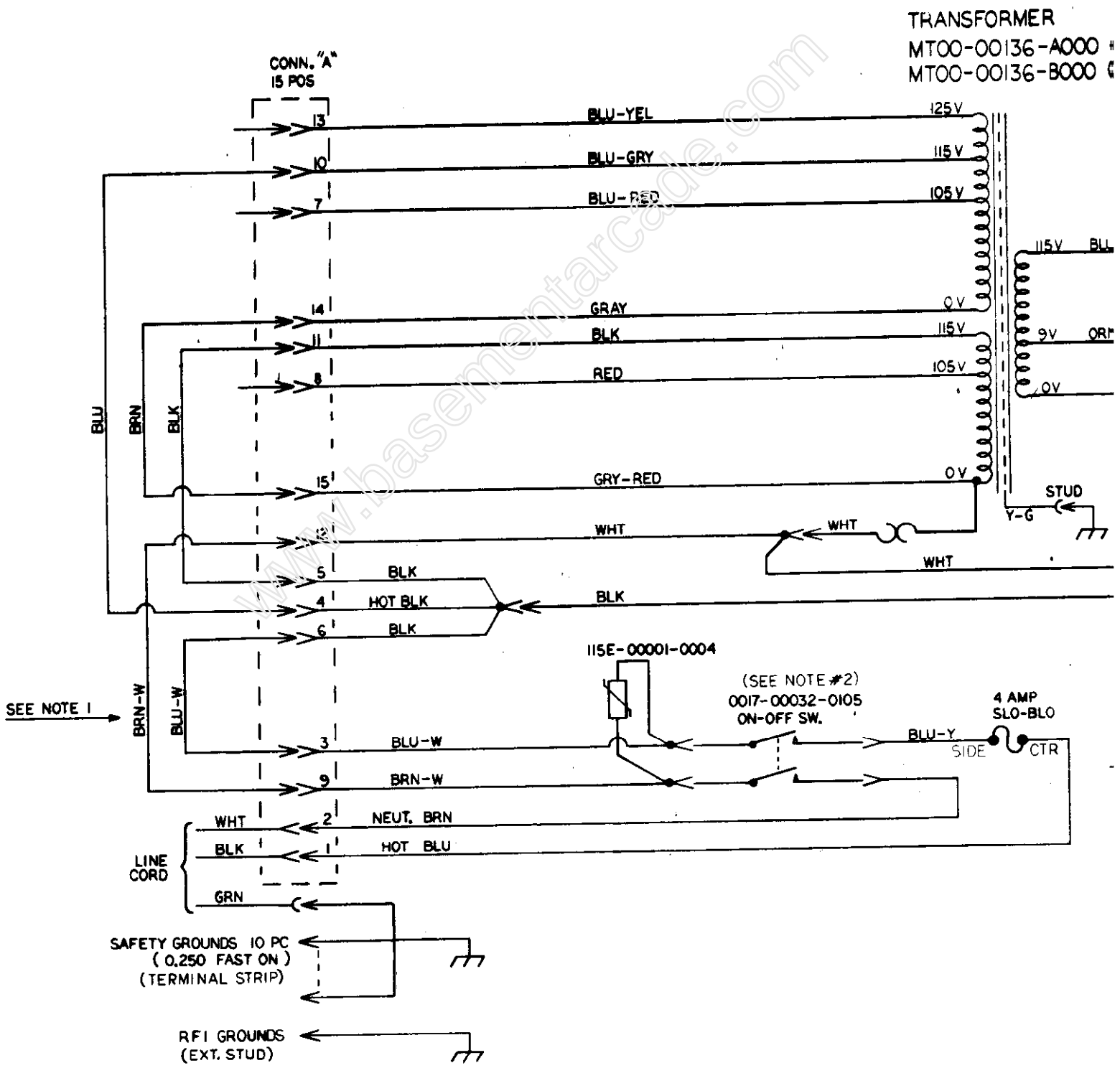

www.basementarcade.com

-0000/0100/0200

CHASSIS ASS'Y # 125 SWUR + 125 SWCT

NOTES: 1. JUMPERS ON CONN "A" 3-6 AND 9-12 CAN BE REPLACED WITH A SAFETY SW. AND/OR AUX. ON OFF SW.

2. MODEL A945-00059-0200 HAS A TERMINAL STRIP.
MODEL A945-00059-0100 HAS A ON/OFF SWITCH.
MODEL A945-00059-0000 HAS A ON/OFF SWITCH.

0 (U.R.)
) (C.T.)

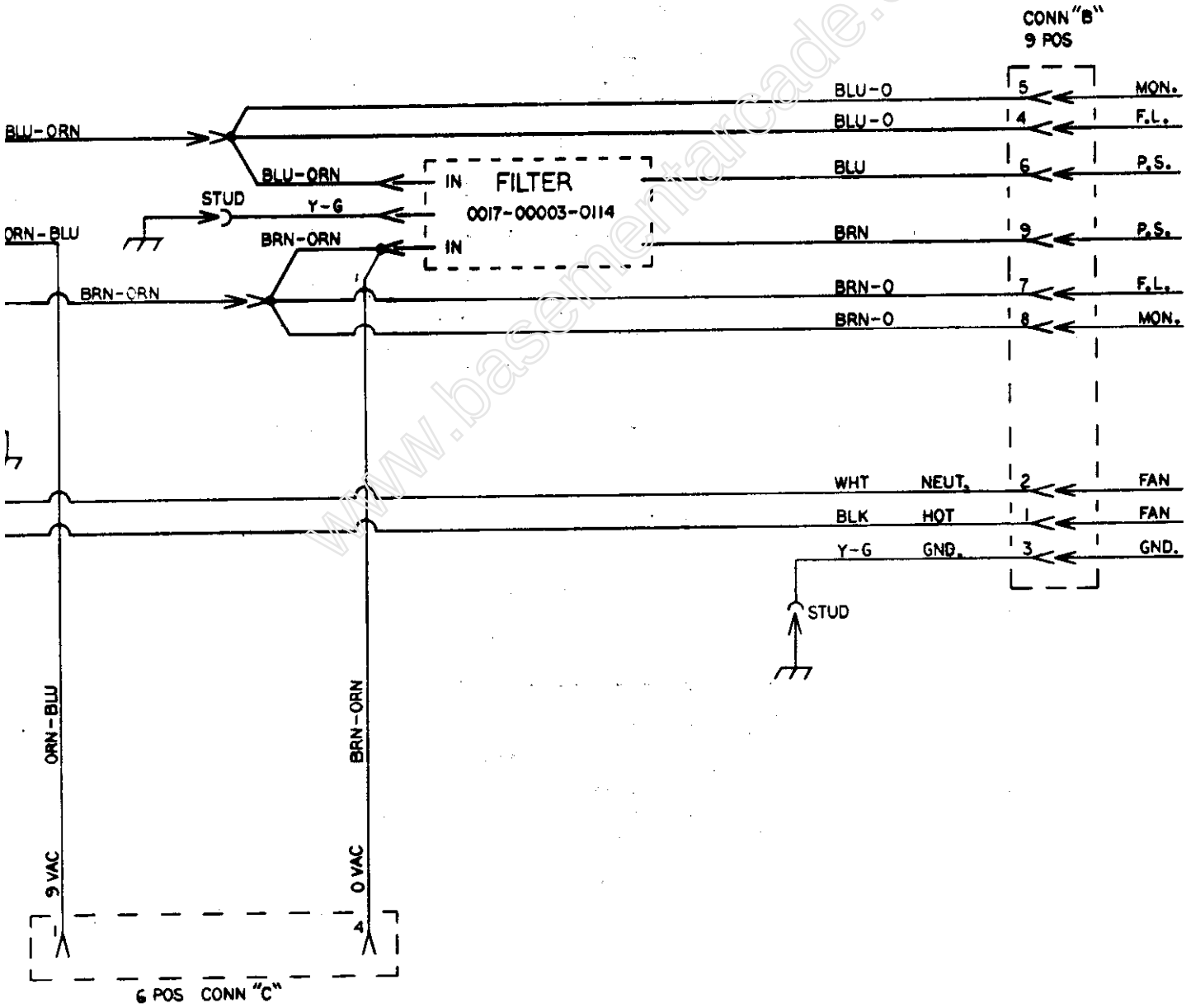

DRAWING # M051-00945-A081

REL FOR PRODUCTION: 4/26/85

www.basementarcade.com

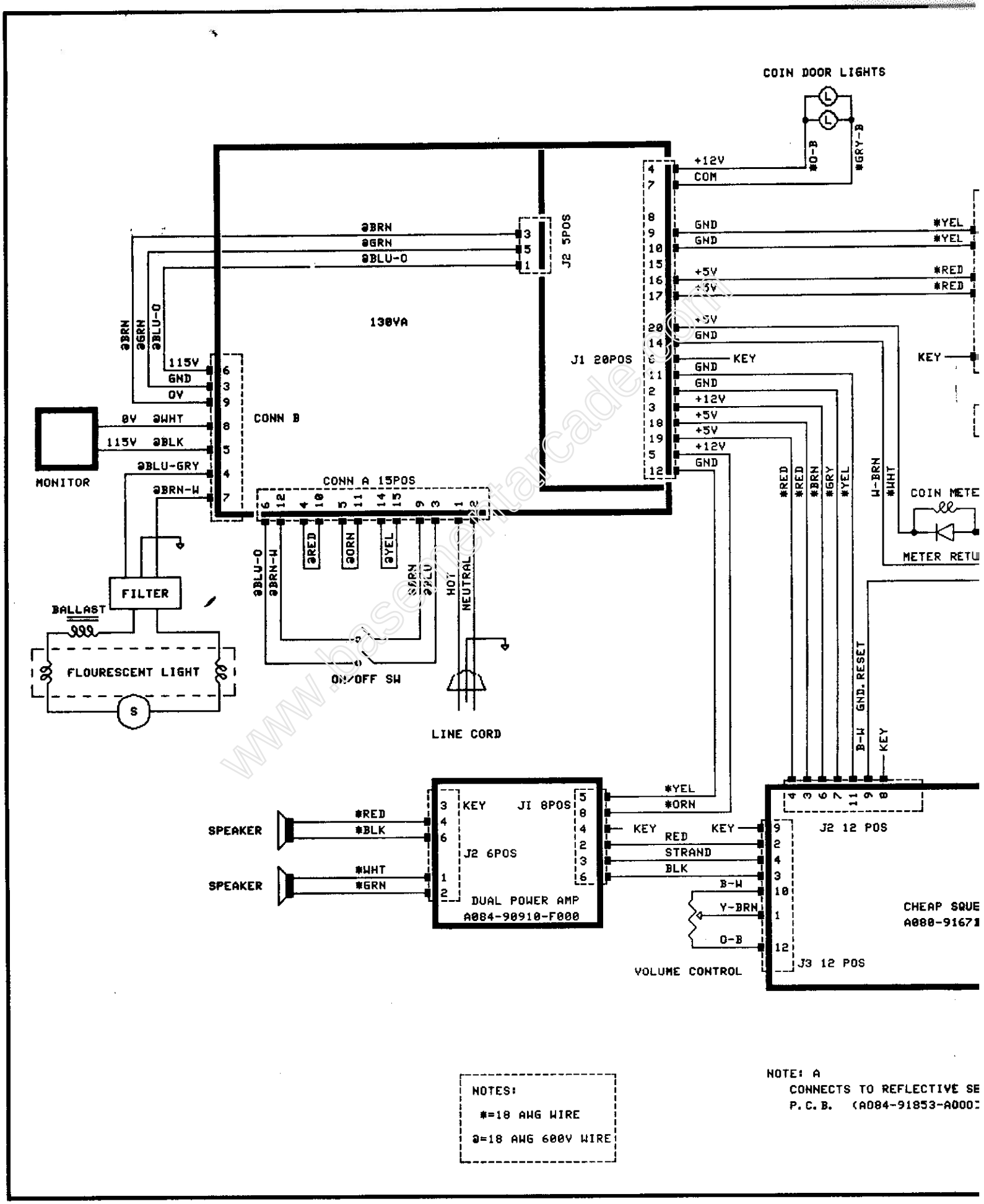

www.basementarcade.com

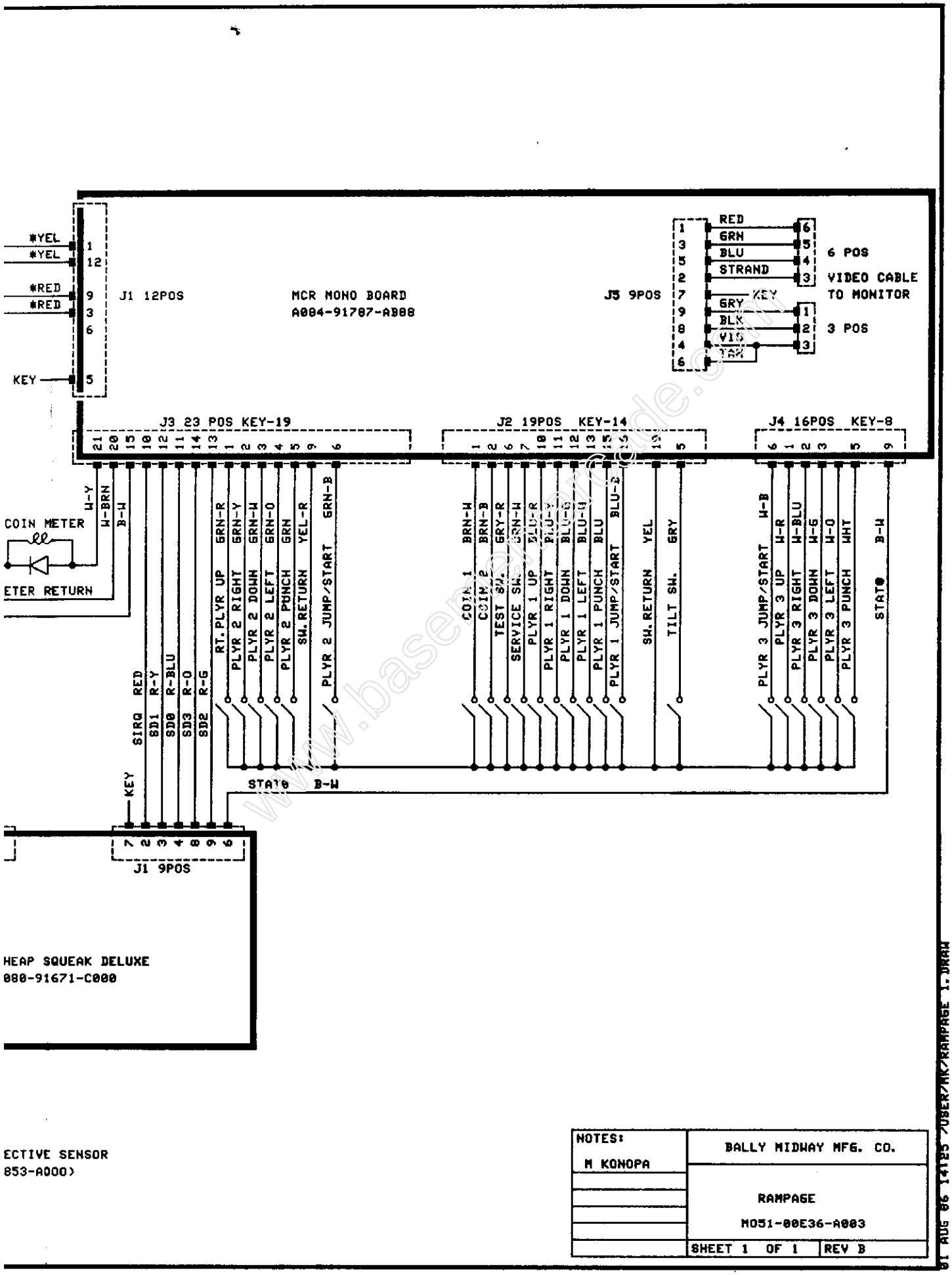

www.basementarcade.com

BALLY/MIDWAY'S RAMPAGE (3 PLYR)
U.R. #0E36
ROM/EPROM PART NUMBERS

UNPROGRAMMED MONOBOARD A084-91787-D000 or A084-91787-E000
PROGRAMMED MONOBOARD A084-91787-AE36

POS.	MIDWAY PART NUMBER
15A	0E36-00803-0001
14B	0E36-00803-0002
8E	0E36-00803-0005
6E	0E36-00803-0006
5E	0E36-00803-0007
4E	0E36-00803-0008
3B	0E36-00803-0003
5B	0E36-00803-0004

JUMPERS	IN	OUT
JW1		**
JW2		**
JW3	**	
JW4		**
JW5	**	
JW6		**

UNPROGRAMMED SOUNDS GOOD BOARD A084-91863-B000
PROGRAMMED SOUNDS GOOD BOARD A084-91863-AE36

POS.	MIDWAY PART NUMBER
U17	0E36-00803-0010
U7	0E36-00803-0011
U18	0E36-00803-0012
U8	0E36-00803-0013

JUMPERS	IN	OUT
JW1		**
JW2		**
JW3	**	

www.basementarcade.com

M051-00E36-A008	REVISIONS
7-29-86	RELEASE FOR PRODUCTION